SPECIAL, 8/28/2017 1:30:00 PM

BE IT REMEMBERED that on August 28, 2017, there was begun and holden a SPECIAL session of the Commissioners Court of Jefferson County, Texas, with the following members and officers present and participating except those absent as indicated:

Honorable Jeff Branick, County Judge

Commissioner Eddie Arnold, Commissioner Pct. No. 1

Commissioner Brent Weaver, Commissioner Pct. No. 2

Commissioner Michael Sinegal, Commissioner Pct. No. 3

Commissioner Everette D. Alfred, Commissioner Pct. No. 4

Honorable Zena Stephens, Sheriff (ABSENT)

NONE

Honorable Carolyn L. Guidry , County Clerk

When the following proceedings were had and orders made, to-wit:

Jeff R. Branick, County Judge
Eddie Arnold, Commissioner, Precinct One
Brent A. Weaver, Commissioner, Precinct Two
Michael S. Sinegal, Commissioner, Precinct Three
Everette "Bo" Alfred, Commissioner, Precinct Four

NOTICE OF MEETING AND AGENDA OF COMMISSIONERS' COURT OF JEFFERSON COUNTY, TEXAS August 28, 2017

Notice is hereby given that the Commissioners' Court of Jefferson County, Texas, willmeet at **1:30 PM,** on the **28th** day of **August 2017** at its regular meeting place in the Commissioners' Courtroom, 4th Floor, Jefferson County Courthouse, 1149 Pearl Street, Beaumont, Texas.

Said meeting will be a **Special** for the purpose of transacting the routine business of the County. Persons with disabilities requiring auxiliary aids for services who wish to attend this meeting should contact the County Judge's Office to arrange for assistance.

In addition to the routine business of the County, the subject of said meeting will be the following:

Immediately following Commissioners Court-Announcement of an executive (closed) session pursuant to Texas Government Code Section § 551.071 for the purpose of receiving information regarding matters that may require litigation.

INVOCATION: Brent A. Weaver, Commissioner, Precinct Two

PLEDGE OF ALLEGIANCE: Michael S. Sinegal, Commissioner, Precinct Three

PURCHASING:

1. Consider and approve specifications for Invitation for Bid (IFB 17-029/JW), Re-bid Jefferson County Sheriff's Office Hangar Building at Jack Brooks Regional Airport.

SEE ATTACHMENTS ON PAGES 13 - 453

Motion by: Commissioner Alfred
Second by: Commissioner Sinegal
In favor: County Judge Branick, Commissioner Arnold, Commissioner Weaver, Commissioner Sinegal, Commissioner Alfred
Action: APPROVED

2. Consider and approve, execute, receive and file a renewal for (IFB 14-032/JW), Term Contract for Paper Stock & Envelopes for Jefferson County for a third one (1) year renewal from September 5, 2017 to September 4, 2018 with Bosworth Papers, Inc. and Olmsted Paper Co.

SEE ATTACHMENTS ON PAGES 454 - 455

Motion by: Commissioner Alfred
Second by: Commissioner Sinegal
In favor: County Judge Branick, Commissioner Arnold, Commissioner Weaver, Commissioner Sinegal, Commissioner Alfred
Action: APPROVED

3. Consider and approve, execute, receive and file a renewal for (IFB 14-033/JW), Re-bid Term Contract for Road Building Materials for Jefferson County for a third one (1) year renewal from September 5, 2017 to September 4, 2018 with Gulf Coast an Old Castle Company, Martin Marietta Materials, and Vulcan Construction Materials, LP.

SEE ATTACHMENTS ON PAGES 456 - 458

Motion by: Commissioner Alfred
Second by: Commissioner Sinegal
In favor: County Judge Branick, Commissioner Arnold, Commissioner Weaver, Commissioner Sinegal, Commissioner Alfred
Action: APPROVED

4. Consider and approve the concrete lift and stabilization of the rear elevator well at Jefferson County Annex IV with Uretek in the amount of $10,000.00. Funds are available through Capital Projects.

SEE ATTACHMENTS ON PAGES 459 - 461

Motion by: Commissioner Alfred
Second by: Commissioner Sinegal
In favor: County Judge Branick, Commissioner Arnold, Commissioner Weaver, Commissioner Sinegal, Commissioner Alfred
Action: APPROVED

5. Consider and approve the replacement of the existing hydraulic cylinder on the elevator at the Jefferson County Annex IV with Otis Elevator Company in the amount of $36,328.02. This is in accordance with TCPN Contract #384899. Funds are available through Capital Projects.

SEE ATTACHMENTS ON PAGES 462 - 466

Motion by: Commissioner Alfred
Second by: Commissioner Sinegal
In favor: County Judge Branick, Commissioner Arnold, Commissioner Weaver, Commissioner Sinegal, Commissioner Alfred
Action: APPROVED

6. Consider and approve disposition of salvage property as authorized by Local Government Code §263.152 (3), for broken or obsolete items.

SEE ATTACHMENTS ON PAGES 467 - 468

Motion by: Commissioner Alfred
Second by: Commissioner Sinegal
In favor: County Judge Branick, Commissioner Arnold, Commissioner Weaver, Commissioner Sinegal, Commissioner Alfred
Action: APPROVED

7. Consider and approve disposal of scrap metal property. Scrap property to be transported to a metal salvage company and there sold for such price as it may command and return funds to the County.

SEE ATTACHMENTS ON PAGES 469 - 469

Motion by: Commissioner Alfred
Second by: Commissioner Sinegal
In favor: County Judge Branick, Commissioner Arnold, Commissioner Weaver, Commissioner Sinegal, Commissioner Alfred
Action: APPROVED

COUNTY AIRPORT:

8. Consider and possibly approve FY2018 TxDOT Routine Airport Maintenance Program (RAMP) Grant for the Jack Brooks Regional Airport. This grant will be used for the maintenance and improvement of airport pavements, signage, drainage, fencing, herbicides, hangars and terminal buildings. (This grant is a 50% match, up to $50,000)"

SEE ATTACHMENTS ON PAGES 470 - 482

Motion by: Commissioner Weaver
Second by: Commissioner Arnold
In favor: County Judge Branick, Commissioner Arnold, Commissioner Weaver, Commissioner Sinegal, Commissioner Alfred
Action: APPROVED

COUNTY AUDITOR:

9. Consider and approve budget transfer - Court Master - additional cost for employee.

120-2055-412-2003	EMPLOYEES' INSURANCE	$5,500.00	
120-2055-412-5077	CONTRACTUAL SERVICE		$5,500.00

SEE ATTACHMENTS ON PAGES 483 - 483

Motion by: Commissioner Weaver
Second by: Commissioner Sinegal
In favor: County Judge Branick, Commissioner Arnold, Commissioner Weaver, Commissioner Sinegal, Commissioner Alfred
Action: APPROVED

10. Consider and approve budget transfer - Constable Pct.1 - purchase equipment & in car video system.

120-3065-425-3084	MINOR EQUIPMENT	$8,875.00	
120-3065-425-3002	AMMUNITION	$2,200.00	
120-3065-425-6002	COMPUTER EQUIPMENT		$2,700.00
120-3065-425-6007	AUTOMOBILES		$8,375.00

SEE ATTACHMENTS ON PAGES 484 - 489

Motion by: Commissioner Weaver
Second by: Commissioner Sinegal
In favor: County Judge Branick, Commissioner Arnold, Commissioner Weaver, Commissioner Sinegal, Commissioner Alfred
Action: APPROVED

11. Consider and approve electronic disbursements for the following items:. $1,800,000 to State Comptroller for second half of IGT for indigent health care.4. $617.3 to Texas Department of Criminal Justice for August insurance reimbursement 2. $379,415.40 to LaSalle for revenue received from entities for inmate housing.3. $854.10 to Texas Department of Criminal Justice for August insurance reimbursement.

    Motion by: Commissioner Weaver
    Second by: Commissioner Sinegal
    In favor: County Judge Branick, Commissioner Arnold, Commissioner Weaver, Commissioner Sinegal, Commissioner Alfred
    Action: APPROVED

12. Regular County Bills - check #437163 through checks #437454.

    SEE ATTACHMENTS ON PAGES 490 - 499

    Motion by: Commissioner Weaver
    Second by: Commissioner Sinegal
    In favor: County Judge Branick, Commissioner Arnold, Commissioner Weaver, Commissioner Sinegal, Commissioner Alfred
    Action: APPROVED

13. Consider and approve budget transfer - General Services - additional cost for termination.

120-1024-419-1099	TERMINATION ALLOWANCE	$52,000.00	
120-1024-419-2001	F.I.C.A. EXPENSE	$4,000.00	
120-1024-419-2002	EMPLOYEES' RETIREMENT	$9,000.00	
120-1024-419-5040	LIABILITY INSURANCE		$65,000.00

SEE ATTACHMENTS ON PAGES 500 - 500

Motion by: Commissioner Weaver
Second by: Commissioner Sinegal
In favor: County Judge Branick, Commissioner Arnold, Commissioner Weaver, Commissioner Sinegal, Commissioner Alfred
Action: APPROVED

ADDENDUMS

14. Consider and approve renewal of Title IV-E Child Welfare and Legal Services contracts with the Texas Department of Family and Protective Services. Renewal dates are 10/01/2017 to 09/30/2018.

SEE ATTACHMENTS ON PAGES 501 - 533

Motion by: Commissioner Weaver
Second by: Commissioner Sinegal
In favor: County Judge Branick, Commissioner Arnold, Commissioner Weaver, Commissioner Sinegal, Commissioner Alfred
Action: APPROVED

15. Consider and approve budget amendment - Road & Bridge Pct. 3 - transfer utility maintenance position from Port Arthur Maintenance to Road & Bridge Pct. 3 effective September 3, 2017.

113-0302-431-1028	LABORERS	$2,614.00	
113-0302-431-1094	LONGEVITY PAY	$10.00	
113-0302-431-2001	F.I.C.A. EXPENSE	$184.00	
113-0302-431-2002	EMPLOYEES' RETIREMENT	$466.00	
113-0302-431-2003	EMPLOYEES' INSURANCE	$525.00	
113-0301-431-2007	CELLULAR PHONE ALLOWANCE	$75.00	
120-6084-416-1072	MAINTENANCE CREW		$2,614.00
120-6084-416-1094	LONGEVITY PAY		$10.00
120-6084-416-2001	F.I.C.A. EXPENSE		$184.00
120-6084-416-2002	EMPLOYEES' RETIREMENT		$466.00
120-6084-416-2003	EMPLOYEES' INSURANCE		$525.00
120-6084-416-2007	CELLULAR PHONE ALLOWANCE		$75.00

SEE ATTACHMENTS ON PAGES 534 - 534

Motion by: Commissioner Weaver
Second by: Commissioner Sinegal
In favor: County Judge Branick, Commissioner Arnold, Commissioner Weaver, Commissioner Sinegal, Commissioner Alfred
Action: APPROVED

COUNTY CLERK:

16. Consider and possibly adopt a Resolution recognizing, Barbara James, for 17+ years of dedicated service as a Deputy Clerk in the County Clerk's Office and to the citizens of Jefferson County and wishing her well in her future endeavors.

SEE ATTACHMENTS ON PAGES 535 - 535

Motion by: Commissioner Sinegal
Second by: Commissioner Arnold
In favor: County Judge Branick, Commissioner Arnold, Commissioner Weaver, Commissioner Sinegal, Commissioner Alfred
Action: APPROVED

17. Conduct Public hearing on the County Clerk’s Records Archive Plan for fiscal year 2017-2018.

OPEN MEETING NO SPEAKERS CLOSED

Motion by: Commissioner Alfred
Second by: Commissioner Weaver
In favor: County Judge Branick, Commissioner Arnold, Commissioner Weaver, Commissioner Sinegal, Commissioner Alfred
Action: APPROVED

18. Consider and possibly approve, receive and file, the County Clerk’s Records Archive Plan for fiscal year 2017-2018.

SEE ATTACHMENTS ON PAGES 536 - 536

Motion by: Commissioner Sinegal
Second by: Commissioner Arnold
In favor: County Judge Branick, Commissioner Arnold, Commissioner Weaver, Commissioner Sinegal, Commissioner Alfred
Action: APPROVED

19. Consider and approve Early Voting Polling locations for the Joint Constitutional Amendment Election with multiple political subdivisions to be held November 7, 2017.

SEE ATTACHMENTS ON PAGES 537 - 537

Motion by: Commissioner Sinegal
Second by: Commissioner Arnold
In favor: County Judge Branick, Commissioner Arnold, Commissioner Weaver, Commissioner Sinegal, Commissioner Alfred
Action: APPROVED

20. Consider and approve Election Day Polling locations for the Joint Constitutional Amendment Election with multiple political subdivisions to be held November 7, 2017.

SEE ATTACHMENTS ON PAGES 538 - 538

Motion by: Commissioner Sinegal
Second by: Commissioner Arnold
In favor: County Judge Branick, Commissioner Arnold, Commissioner Weaver, Commissioner Sinegal, Commissioner Alfred
Action: APPROVED

COUNTY COMMISSIONERS:

21. Consider and possibly approve a Proclamation for Suicide Prevention Month.

SEE ATTACHMENTS ON PAGES 539 - 539

Action: TABLED

22. Consider and possible approve a Resolution commending Patricia Nantz for 20 years of service to Jefferson County and wishing her well in her retirement.

SEE ATTACHMENTS ON PAGES 540 - 540

Action: TABLED

23. Presentation by YMBL regarding financial results of the Southeast Texas State Fair.

Action: TABLED

24. Consider, possibly approve and authorize the County Judge to order to extend and renew the Declaration of Disaster entered on August 24, 2017 for Tropical Depression/Hurricane Harvey pursuant to Section 418.108, Local Government Code.

SEE ATTACHMENTS ON PAGES 541 - 542

Motion by: Commissioner Arnold
Second by: Commissioner Sinegal
In favor: County Judge Branick, Commissioner Arnold, Commissioner Weaver, Commissioner Sinegal, Commissioner Alfred
Action: APPROVED

25. Consider, possibly approve, authorize the County Judge to execute Property Tax Abatement between Coastal Caverns I, L.P. and Jefferson County for Property located within the Coastal Caverns Reinvestment Zone pursuant to Section 312.401, Texas Tax Code.(Phase 1and 2)

SEE ATTACHMENTS ON PAGES 543 - 595

Action: TABLED

26. Consider, possibly approve, authorize the County Judge to execute Property Tax Abatement between Colonial Pipeline LLC and Jefferson County for Property located within the Colonial Pipeline Reinvestment Zone pursuant to Section 312.401, Texas Tax Code.

SEE ATTACHMENTS ON PAGES 596 - 637

Motion by: Commissioner Arnold
Second by: Commissioner Sinegal
In favor: County Judge Branick, Commissioner Arnold, Commissioner Weaver, Commissioner Sinegal, Commissioner Alfred
Action: APPROVED

DISTRICT CLERK:

27. Public hearing on the District Clerk's Records Archive Plan for fiscal year 2017 - 2018.

OPEN MEETING NO SPEAKERS CLOSED

Motion by: Commissioner Arnold
Second by: Commissioner Sinegal
In favor: County Judge Branick, Commissioner Arnold, Commissioner Weaver, Commissioner Sinegal, Commissioner Alfred
Action: APPROVED

28. Consider and possibly approve, receive and file, the District Clerk's Records Archive Plan for fiscal year 2017 - 2018.

SEE ATTACHMENTS ON PAGES 638 - 640

Motion by: Commissioner Arnold
Second by: Commissioner Sinegal
In favor: County Judge Branick, Commissioner Arnold, Commissioner Weaver, Commissioner Sinegal, Commissioner Alfred
Action: APPROVED

HUMAN RESOURCES:

29. Consider and possibly approve and receive and file revisions to the 'Personnel Policies Practices and Procedures Manual' for Section 9 - Emergency Closing.

SEE ATTACHMENTS ON PAGES 641 - 644

Action: TABLED

SHERIFF'S DEPARTMENT:

30. Consider and possibly approve out of state travel for two deputies from the Jefferson County Sheriff's Office. This training is at the National Computer Forensic Institute in Hoover, Alabama. The dates are December 10-15, 2017 and January 21-26, 2018. Nominations from the US Secret Service have been granted for the Sheriff's Office, approval would secure those nominations guaranteeing their place. This training and all other travel expenses are at no cost to the County. This training is essential in remaining up to date in the investigation of the ever changing computer crimes, and would be a benefit to the Sheriff's Office and the citizen's of Jefferson County.

SEE ATTACHMENTS ON PAGES 645 - 646

Motion by: Commissioner Sinegal
Second by: Commissioner Alfred
In favor: County Judge Branick, Commissioner Arnold, Commissioner Weaver, Commissioner Sinegal, Commissioner Alfred
Action: APPROVED

31. Consider, possibly approve and authorize the Jefferson County Judge to execute an Inter-local Agreement between Jefferson County and the cities of Beaumont and Port Arthur on asset sharing of the 2017 Byrne Justice Assistance Grant (JAG) Program Award.

SEE ATTACHMENTS ON PAGES 647 - 649

Motion by: Commissioner Sinegal
Second by: Commissioner Alfred
In favor: County Judge Branick, Commissioner Arnold, Commissioner Weaver, Commissioner Sinegal, Commissioner Alfred
Action: APPROVED

32. Consider and possibly authorize the County Judge to execute the Southeast Texas Auto Theft Task Force Grant Renewal for FY 2017-2018 - Interlocal Agency Agreement between Jefferson County, the Cities of Beaumont and Port Arthur and Hardin, Jasper, Hardin and Orange Counties.

SEE ATTACHMENTS ON PAGES 650 - 665

Motion by: Commissioner Sinegal
Second by: Commissioner Alfred
In favor: County Judge Branick, Commissioner Arnold, Commissioner Weaver, Commissioner Sinegal, Commissioner Alfred
Action: APPROVED

_____

Jeff R. Branick
County Judge

JEFFERSON COUNTY PURCHASING DEPARTMENT

Deborah L. Clark, Purchasing Agent

1149 Pearl Street, 1st Floor, Beaumont, TX 77701 409-835-8593 Fax 409-835-8456

LEGAL NOTICE
Advertisement for Invitation for Bids

August 28, 2017

Notice is hereby given that sealed bids will be accepted by the Jefferson County Purchasing Department for IFB 17-009/JW, Jefferson County Sheriff's Office Hangar Building at Jack Brooks Regional Airport. **Specifications for this project may be obtained from the Jefferson County website, http://www.co.jefferson.tx.us/Purchasing/main.htm or by calling 409-835-8593.**

Bids are to be sealed and addressed to the Purchasing Agent with the bid number and name marked on the outside of the envelope. Bidders shall forward an original and three (3) copies of their bid to the address shown below. Jefferson County does not accept bids submitted electronically. Late bids will be rejected as non-responsive. Bids will be publicly opened and read aloud in the Jefferson County Commissioners' Courtroom at the time and date below. Bidders are invited to attend the sealed bid opening.

BID NAME:	**Re-bid Jefferson County Sheriff's Office Hangar Building at Jack Brooks Regional Airport**
BID NO:	**IFB 17-029/JW**
DUE DATE/TIME:	**11:00 AM CDT, Tuesday, September 26, 2017**
MAIL OR DELIVER TO:	**Jefferson County Purchasing Department 1149 Pearl Street, 1st Floor Beaumont, Texas 77701**

There will be a **Pre-bid Conference** at 10:00 AM CDT on Tuesday, September 12, 2017, at the Jefferson County Engineering Department Conference Room located on the 5th floor of the Jefferson County Courthouse, 1149 Pearl Street, Beaumont, Texas 77701.

The County shall require the bidder to furnish a bid security in the amount of five percent (5%) of the total contract cost. The bid bond must be executed with a surety company authorized to do business in the State of Texas. Within ten (10) days after the date of the signing of a contract, the bidder shall furnish a performance bond to the County for the full amount of the contract, if the contract exceeds one hundred thousand dollars ($100,000). If the contract is for one hundred thousand dollars ($100,000) or less, the County may provide that no money be paid to the contractor until completion and acceptance of the work or the fulfillment of the purchase obligation to the County.

Any questions relating to these requirements should be directed to Jamey West, Assistant Purchasing Agent, at 409-835-8593 or jwest@co.jefferson.tx.us. Questions relating to the plans and specifications should be directed to Heath Reynolds, P.E., Project Manager, at (409) 291-5362 or hreynolds@ljaengineering.com

Site visits may be made by appointment only. Bidders may request a site visit by contacting Major Clay Woodward with the Jefferson County Sheriff's Department at 409-726-2950. To ensure staff availability, we encourage all bidders to act in a prompt manner in requesting a site visit appointment.

Jefferson County encourages Disadvantaged Business Enterprises to participate in the bidding process. Jefferson County does not discriminate on the basis of race, color, national origin, sex, religion, age or disability in employment or the provisions of services. Individuals requiring special accommodations are requested to contact our office at 409-835-8593 to make arrangements no later than seven (7) calendar days prior to the submittal deadline. Jefferson County reserves the right to accept or reject any or all proposals, to waive technicalities and to take whatever action is in the best interest of Jefferson County.

All interested firms are invited to submit a bid in accordance with the terms and conditions stated in this bid.

RESPONDENTS ARE STRONGLY ENCOURAGED TO CAREFULLY READ THE ENTIRE INVITATION.

Deborah L. Clark, Purchasing Agent
Jefferson County, Texas

Publish: Beaumont Enterprise & Port Arthur News – August 30, 2017 and September 6, 2017

IFB 17-029/JW
Re-bid Jefferson County Sheriff's Office Hangar Building at Jack Brooks Regional Airport

Bids due: 11:00 AM CDT, Tuesday, September 26, 2017

Table of Contents

Table of Contents 1

Instructions to Bidders 5

1. Bid Submission 5
2. Bid Submissions During Time of Inclement Weather, Disaster, or Emergency 5
3. Courthouse Security 5
4. Preparation of Bids 5
5. Signatures 6
6. County Holidays(2017) 6
7. Rejection or Withdrawal 6
8. Emergency/Declared Disaster Requirements 6
9. Award 6
10. Contract 7
11. Waiver Subrogation 7
12. Fiscal Funding 7
13. Bid Results 7
14. Changes and Addenda to Bid Documents 7
15. Specifications 7
16. Delivery 8
17. Interpretation of Bid and/or Contract Documents 8
18. Currency 8
19. Pricing 8
20. Notice to Proceed/Purchase Order 8
21. Certification 8
22. Definitions 8
23. Minority-Women Business Enterprise Participation 8
24. Equal Employment Opportunity 8

General Conditions of Bidding and Terms of Contract 9

1. Bidding 9
   - 1.1 Bids 9
   - 1.2 Authorized Signatures 9
   - 1.3 Late Bids 9
   - 1.4 Withdrawal of Bids Prior to Bid Opening 9
   - 1.5 Withdrawl of Bids after Bid Opening 9
   - 1.6 Bid Amounts 9
   - 1.7 Exceptions and/or Substitutions 9
   - 1.8 Alternates 9
   - 1.9 Descriptions 9
   - 1.10 Bid Alterations 9
   - 1.11 Tax Exempt Status 9
   - 1.12 Quantities 9
   - 1.13 Bid Award 10
   - 1.14 Silence of Specifications for Complete Units 10
   - 1.15 Addenda 10
   - 1.16 General bid Bond/Surety Requirements 10
   - 1.17 General Insurance Requirements 10

1.18 Responsiveness 10
1.19 Responsible Standing of Bidder 10
1.20 Proprietary Data 10
1.21 Public Bid Opening 10

2. Knowledge of Site 10
2.1 Inspection of Site 10

3. Performance 11
3.1 Design, Strength, and Quality 11
3.2 Age and Manufacture 11
3.3 Delivery Location 11
3.4 Delivery Schedule 11
3.5 Delivery Charges 11
3.6 Installation Charges 11
3.7 Operating Instructions and Training 11
3.8 Storage 11
3.9 Compliance with Federal, State, County, and Local Laws 11
3.10 OSHA 11
3.11 Patents and Copyrights 11
3.12 Samples, Demonstrations, and Testing 11
3.13 Acceptability 12
3.14 Maintenance 12
3.15 Material Safety Data Sheets 12
3.16 Evaluation 12

4. Purchase Orders and Payment 12
4.1 Purchase Orders 12
4.2 Invoices 12
4.3 Prompt Payment 12
4.4 Funding 12

5. Contract 12
5.1 Contract Definition 12
5.2 Changes in the Work 13
5.3 Change Order 13
5.4 Claims for Extra Cost 13
5.5 Price Re-determination 14
5.6 Termination, Delays, and Liquidated Damages 14
5.6.1 Right of the Owner (Jefferson County) to Terminate Contract 14
5.6.2 Liquidated Damages for Delays 14
5.6.3 Excusable Delays 14
5.7 Assignment or Novation 15
5.8 Disputes 15
5.9 Conflict of Interest 15
5.10 Injuries or Damages Resulting from Negligence 15
5.11 Interest by Public Officials 15
5.12 Warranty 15
5.13 Uniform Commercial Code 16
5.14 Venue 16
5.15 Sale, Assignment, or Transfer of Contract 16
5.16 Silence of Specifications 16

6. Execution of Agreement/Performance and Payment Bonds 16
7. Statement of Bidders Qualifications 16

Special Requirements/Instructions 17

1. Bid Requirement 17
2. Vendor Registration: SAM (System for Award Management) 17
3. Awarded Vendor(s): Submission of FORM 1295 (Texas Ethics Commission) 17
4. Multiple Vendor Award 17

5. Delivery 18
6. Payment 18
7. Payments to Contractor 18
7.1 Partial Payments 18
7.2 Final Payment 18
7.3 Payments Subject to Submission of Certificates 19
7.4 Withholding Payments 19

8. Usage Reports 19
9. Insurance 19
10. Workers' Compensation Insurance 20
11. Acknowledgement of Federal Funding from The Department of Homeland Security 21
12. Project Provisions 21
13. General Civil Rights Provisions 22
14. Civil Rights – Title VI Assurances 22
1. Compliance with Regulations 22
2. Non-discrimination 22
3. Solicitations for Subcontracts, Including Procurements of Materials and Equipment 22
4. Information and Reports 22
5. Sanctions for Non-compliance 23
6. Incorporation of Provisions 23
15. Notice of Requirement for Affirmative Action 23
16. Access to Records and Reports 24
17. Disadvantaged Business Enterprises 24
18. Energy Conservation Requirements 24
19. Federal Fair Labor Standards Act (Federal Minimum Wage) 24
20. Lobbying and Influencing Federal Employees 25
21. Occupational Safety and Health Act of 1970 25
22. Trade Restriction Clause 25
23. Buy American Preferences 26
24. Veteran's Preference 26
25. Copeland "Anti-Kickback" Act 26
26. Davis-Bacon Labor Provisions 26
1. Minimum Wages 26
2. Withholding 27
3. Payrolls and Basic Records 28
4. Apprentices and Trainees 29
5. Compliance with Copeland Act Requirements 30
6. Subcontracts 30
7. Contract Termination: Debarment 30
8. Compliance with Davis-Bacon and Related Act Requirements 31
9. Disputes Concerning Labor Standards 31
10. Certification of Eligibility 31
27. Texting While Driving 31
28. Equal Opportunity Clause 31
29. Notice of Non-Segregated Facilities Requirement 35
30. Termination of Contract 36
31. Certificate Regarding Debarment and Suspension 37
32. Breach of Contract 37
33. Clean Air and Water Pollution Control 37
34. Contract Workhours and Safety Standards Acts Requirements 37
1. Overtime Requirements 37
2. Violation; Liability for Unpaid Wages, Liquidated Damages 37
3. Withholiding for Unpaid Wages and Liquidated Damages 38
4. Subcontractors 38

Davis Bacon Wage Determinations (Current) 39
Bidder Information Form 45
Offer to Contract Form 46
Bid Form 47

Signature Page....48
Non-Collusion Affidavit of Prime Bidder....49
Statement of Bidder's Qualifications....50
Vendor References....52
Bid Bond (Sample)....53
Payment Bond (Sample)....56
Performance Bond (Sample)....58
Standard Form of Agreement (Sample)....61
Federal Labor Standards....78
Contractor Certifications....83
Section 504 Certification....84
American Recovery & Reinvestment Act Certification....85
Conflict of Interest Questionnaire....87
Local Government Officer Conflict Disclosure Statement Forms (OFFICE USE ONLY)....88
Good Faith Effort Determination Checklist....89
Notice of Intent....90
HUB Subcontracting Participation Declaration Form....91
Residence Certification/Tax Form....95
Bid Affidavit....96
§135.38 Section 3 Clause....97
Equal Opportunity Guidelines for Construction Contractors....98
Local Opportunity Plan (Section 3) Plan Format....100
Disclosure of Lobbying Activities....106
Certification: Appointment Officer/ Employee to Supervise Payment of Employees....108
Contractor's Certification Regarding Lobbying....109
Title 29: Labor....110
U.S. Department of Housing and Urban Development: Complaint Register....115
Technical Specifications.... 01100-1

Bid Submissions:

Bidder is responsible for submitting:

- One (1) *original* bid copy to include a completed copy of this specifications packet, in its entirety.
- Three (3) numbered bid *copies* to include at a minimum all pages requiring completion and/or marked with instructions to be returned with bid submission and any other documentation requested within t these specifications.

Additionally, Bidder must monitor the Jefferson County Purchasing Department Website (below) to see if addenda or additional instructions have been posted. Failure to return all required forms could result in a response being declared as non-responsive.

http://www.co.jefferson.tx.us/purchasing/main.htm

Instructions to Bidders

1. Bid Submission

Bids must be submitted in complete original form by mail or messenger to the following address:

Jefferson County Purchasing Department
1149 Pearl Street, 1st Floor
Beaumont, TX 77701

Bids will be accepted at the above address until the time and date specified herein, and immediately after will be publicly opened and read aloud.

Bidder shall submit bid in a tightly sealed opaque envelope or box, plainly marked "SEALED BID." The outside of the envelope of box shall also include the Bid Number, Bid Name, Bid Due Date, and the Bidder's Name and Address; and shall be addressed to the Purchasing Agent.

All bids must be submitted on the Bid Form furnished within these specifications.

Late bids will not be accepted and will be returned unopened to the bidder.

All bids submitted in response to this invitation shall become the property of Jefferson County and will be a matter of public record available for review.

2. Bid Submissions During Time of Inclement Weather, Disaster, or Emergency

In case of inclement weather or any other unforeseen event causing the County to close for business on the date of a bid/proposal/statement of qualifications submission deadline, the closing will automatically be postponed until the next business day that County offices are open to the public. Should inclement weather conditions or any other unforeseen event cause delays in courier service operations, the County may issue an addendum to all known vendors interested in the project to extend the deadline. It will be the responsibility of the vendor to notify the county of their interest in the project should these conditions impact their ability to submit a bid/proposal/statement of qualifications submission before the stated deadline. The County reserves the right to make the final judgement call to extend any deadline.

Should an emergency or unanticipated event interrupt normal County processes, and bid/proposal/statement of qualifications submissions cannot be received by the Jefferson County Purchasing Department's office by the exact time specified in the IFB and urgent County requirements preclude amendment to the IFB, the time specified for receipt of bids will be deemed to be extended to the same time of day specified in the solicitation on the first business day on which normal County processes resume.

3. Courthouse Security

Bidders are advised that all visitors to the Courthouse must pass through Security. **Bidders planning to hand deliver bids must allow time to get through Security, as a delay in entering the Courthouse will not be accepted as an excuse for late submittal.** Mondays and Tuesdays are particularly heavy days. Bidders are strongly urged to plan accordingly.

4. Preparation of Bids

The bid shall be legibly printed in ink or typed.

The County requests that bid submissions NOT be bound by staples or glued spines.

If a unit price or extension already entered is to be altered, it shall be crossed out and initialed in ink by the bidder.

The bid shall be legally signed and shall include the complete address of the bidder.

Jefferson County is exempt from Federal and State Sales Taxes, and such taxes shall not be included in bid prices.

5. Signatures

All bids, notifications, claims, and statements must be signed by an individual authorized to bind the bidder. The individual signing certifies, under penalty of perjury, that he or she has the legal authorization to bind the bidder.

6. County Holidays – 2017:

January 16	Monday	Martin Luther King, Jr. Day
February 20	Monday	President's Day
April 14	Friday	Good Friday
May 29	Monday	Memorial Day
July 4	Tuesday	Independence Day
September 4	Monday	Labor Day
November 10	Friday	Veteran's Day
November 23 & 24	Thursday & Friday	Thanksgiving
December 25 & 26	Monday & Tuesday	Christmas
January 1, 2018	Monday	New Year's

7. Rejection or Withdrawal

Submission of additional terms, conditions or agreements with the bid document are grounds for deeming a bid non-responsive and may result in bid rejection. Jefferson County reserves the right to reject any and all bids and to waive any informalities and minor irregularities or defects in bids. Bids may be withdrawn in person by a bidder or authorized representative, provided their identity is made known and a receipt is signed for the bid, but only if the withdrawal is made prior to the time set for receipt of bids. Bids are an irrevocable offer and may not be withdrawn within 90 days after opening date.

8. Emergency/Declared Disaster Requirements

In the event of an emergency or if Jefferson County is declared a disaster area, by the County, State, or Federal Government, this Acceptance of Offer may be subjected to unusual usage. Contractor shall service the county during such an emergency or declared disaster under the same terms and conditions that apply during non-emergency/disaster conditions. The pricing as specified in this Acceptance of Offer shall apply to serving the County's needs regardless of the circumstances. If Contractor is unable to supply the services under the terms of the Acceptance of Offer, then Contractor shall provide proof of such disruption and a copy of the invoice from Contractor's supplier(s). Additional profit margin as a result of supplying services during an emergency or declared disaster shall not be permitted. In the event that additional equipment, supplies, and materials are required during the declared disaster, additional shipping, handling and drayage fees may apply.

9. Award

The bid will be awarded to the responsible, responsive bidder(s) whose bid, conforming to the solicitation, will be most advantageous to Jefferson County – price and other factors considered. Unless otherwise specified in this IFB, Jefferson County reserves the right to accept a bid in whole or in part, and to award by item or by group, whichever is deemed to be in the best interest of Jefferson County. Any bidder who is in default to Jefferson County at the time of submittal of the bid shall have that bid rejected. Jefferson County reserves the right to clarify any contractual terms with the

concurrence of the Contractor; however, any substantial nonconformity in the offer, as determined by Jefferson County, shall be deemed non-responsive and the offer rejected.

In evaluating bids, Jefferson County shall consider the qualifications of the bidders, and, where applicable, operating costs, delivery time, maintenance requirements, performance data, and guarantees of materials and equipment. In addition, Jefferson County may conduct such investigation as it deems necessary to assist in the evaluation of a bid and to establish the responsibility, qualifications, and financial ability of the bidders to fulfill the contract.

Jefferson County reserves the right to award this contract on the basis of **lowest and best bid** in accordance with the laws of the State of Texas, to waive any formality or irregularity, to make awards to more than one offeror, and/or to reject any or all bids. In the event the lowest dollar offeror meeting specifications is not a awarded a contract, Offeror may appear before the Commissioners' Court and present evidence concerning Offeror responsibility after officially notifying the Office of the Purchasing Agent of Offeror's intent to appear.

10. Contract

A response to an IFB is an offer to contract with Jefferson County based upon the terms, conditions, and specifications contained in the IFB. Bids do not become contracts unless and until they are executed by Jefferson County, eliminating a formal signing of a separate contract. For that reason, all of the terms and conditions of the contract are contained in the IFB, unless any of the terms and conditions is modified by an IFB Amendment, a Contract Amendment, or by mutually agreed terms and conditions in the contract documents.

11. Waiver of Subrogation

Bidder and bidder's insurance carrier waive any and all rights whatsoever with regard to subrogation against Jefferson County as an indirect party to any suit arising out of personal or property damages resulting from bidder's performance under this agreement.

12. Fiscal Funding

A multi-year contract (if requested by the specifications) continuing as a result of an extension option must include fiscal funding out. If, for any reason, funds are not appropriated to continue the contract, said contract shall become null and void.

13. Bid Results

Bid results are not provided in response to telephone inquiries. A preliminary tabulation of bids received will be posted on the Purchasing web page (http://co.jefferson.tx.us/ purchasing/main.htm) as soon as possible following bid opening. A final tabulation will be posted following bid award, and will also be available for review in the Purchasing Department.

14. Changes and Addenda to Bid Documents

Each change or addendum issued in relation to this IFB document will be on file in the Office of the Purchasing Agent, and will be posted on the Purchasing web site as soon as possible. It shall be the bidder's responsibility to make inquiry as to change or addenda issued, and to monitor the web site. All such changes or addenda shall become part of the contract and all bidders shall be bound by such addenda. Information on all changes or addenda issued will be available at the Office of the County Purchasing Agent.

15. Specifications

Unless otherwise stated by the bidder, the bid will be considered as being in accordance with Jefferson County's applicable standard specifications, and any special specifications outlined in the bid document. References to a particular trade name, manufacturer's catalogue, or model number are made for descriptive purposes to guide the bidder in interpreting the requirements of Jefferson County, and should not be construed as excluding bids on other types of materials, equipment, and supplies. However, the bidder, if awarded a contract, will be required to furnish the particular item referred to in the specifications or description unless departure or substitution is clearly noted and described in the bid. Jefferson County reserves the right to determine if equipment/ product being bid is an acceptable alternate. All goods shall be new unless otherwise so stated in the bid. Any unsolicited alternate bid,

or any changes, insertions, or omissions to the terms and conditions, specifications, or any other requirements of the bid, may be considered non-responsive.

16. Delivery

Bids shall include all charges for delivery, packing, crating, containers, etc. Unless otherwise stated by the bidder (in writing on the included Bid Form), prices bid will be considered as being based on F.O.B. destination/delivered freight included.

17. Interpretation of Bid and/or Contract Documents

All inquiries shall be made within a reasonable time prior to the date and time fixed for the bid opening, in order that a written response in the form of an addendum, if required, can be processed before the bids are opened. Inquiries received that are not made in a timely fashion may or may not be considered.

18. Currency

Prices calculated by the bidder shall be stated in U.S. dollars.

19. Pricing

Prices shall be stated in units of quantity specified in the bid documents. In case of discrepancy in computing the amount of the bid, the unit price shall govern.

20. Notice to Proceed/Purchase Order

The successful bidder may not commence work under this contract until authorized to do so by the Purchasing Agent.

21. Certification

By signing the offer section of the Offer and Acceptance page, bidder certifies:

- The submission of the offer did not involve collusion or other anti-competitive practices.
- The bidder has not given, offered to give, nor intends to give at any time hereafter, any economic opportunity, future employment, gift, loan, gratuity, special discount, trip, favor, or service to any public servant in connection with the submitted offer.
- The bidder hereby certifies that the individual signing the bid is an authorized agent for the bidder and has the authority to bind the bidder to the contract.

22. Definitions

"County" – Jefferson County, Texas.

"Contractor" – The bidder whose proposal is accepted by Jefferson County.

23. Minority-Women Business Enterprise Participation

It is the desire of Jefferson County to increase the participation of Minority (MBE) and women-owned (WBE) businesses in its contracting and procurement programs. While the County does not have any preference or set aside programs in place, it is committed to a policy of equitable participation for these firms.

24. Equal Employment Opportunity

Attention is called to the requirements for ensuring that employees and applicants for employment are not discriminated against because of their race, color, creed, sex, gender, or national origin.

General Conditions of Bidding and Terms of Contract

By execution of this document, the vendor accepts all general and special conditions of the contract as outlined below and in the specifications and plans.

1. Bidding

1.1 Bids. All bids must be submitted on the bid form furnished in this package.

1.2 Authorized Signatures. The bid must be executed personally by the vendor, duly authorized partner of the partnership, or duly authorized officer of the corporation. If executed by an agent, a power of attorney or other evidence of authority to act on behalf of the vendor shall accompany the bid to become a valid bid.

1.3 Late Bids. Bids must be in the office of the Jefferson County Purchasing Agent before or at the specified time and date bids are due. Bids received after the submission deadline shall be rejected as non-responsive and returned unopened.

1.4 Withdrawal of Bids Prior to Bid Opening. A bid may be withdrawn before the opening date by submitting a written request to the Purchasing Agent. If time allows, the bidder may submit a new bid. Bidder assumes full responsibility for submitting a new bid before or at the specified time and date bids are due. Jefferson County reserves the right to withdraw a request for bids before the opening date.

1.5 Withdrawal of Bids after Bid Opening. Bidder agrees that its offer may not be withdrawn or cancelled by the vendor for a period of ninety (90) days following the date and time designated for the receipt of bids unless otherwise stated in the bid and/or specifications.

1.6 Bid Amounts. Bids shall show net prices, extensions where applicable and net total. In case of conflict between unit price and extension, the unit price will govern. Any ambiguity in the bid as a result of omission, error, unintelligible or illegible wording shall be interpreted in the favor of Jefferson County.

1.7 Exceptions and/or Substitutions. All bids meeting the intent of the specifications and plans will be considered for award. Vendors taking exception to the specifications and plans, or offering substitutions, shall state these exceptions in the section provided. If bid is made on an article other than the one specified, which a bidder considers comparable, the name and grade of said article must be specified in the bid and sufficient specifications and descriptive data must accompany same to permit thorough evaluation. The absence of stated exceptions and/or substitutions shall indicate that the vendor has not taken any exceptions to the specifications and shall be responsible to perform in strict accordance with the specifications. As a matter of practice, Jefferson County rejects exception(s) and /or substitutions as non-responsive but reserves the right to accept any and/or all of the exception(s) and/or substitution(s) deemed to be in the best interest of Jefferson County.

1.8 Alternates. The Invitation for Bid and/or specifications may expressly allow bidder to submit an alternate bid. Presence of such an offer shall not be considered an indication of non-responsiveness.

1.9 Descriptions. Unless otherwise specified, any reference to make, manufacturer and/or model used in the bid specifications is merely descriptive and not restrictive, and is used only to indicate type, style, or quality of material desired.

1.10 Bid Alterations. Bids cannot be altered or amended after submission deadline. Any interlineations, alterations, or erasures made before opening time must be initialed by the signer of the bid, guaranteeing authenticity.

1.11 Tax Exempt Status. Jefferson County is exempt from federal excise tax and state sales tax. Unless the bid form or specifications specifically indicate otherwise, the bid price must be net, exclusive of above-mentioned taxes and will be so construed. Therefore, the bid price shall not include taxes.

1.12 Quantities. Quantities indicated are estimated quantities only and are not a commitment to buy. Approximate usage does not constitute an order, but only implies the probable quantity that will

be used. Commodities will be ordered on an as-needed basis. Bidder is responsible for accurate final counts.

1.13 Bid Award. Award of contract shall be made to the most responsible, responsive bidder, whose offer is determined to be the best value, taking into consideration the relative importance of price. Jefferson County reserves the right to be the sole judge as to whether items bid will serve the purpose intended. Jefferson County reserves the right to accept or reject in part or in whole any bid submitted, and to waive any technicalities or informalities for the best interest of the County. Jefferson County reserves the right to award based upon individual line items, sections or total bid.

1.14 Silence of Specifications for Complete Units. All materials, equipment and/or parts that will become a portion of the completed work, including items not specifically stated herein but, necessary to render the service(s) complete and operational per the specifications, are to be included in the bid price. Vendor may be required to furnish evidence that the service, as bid, will meet or exceed these requirements.

1.15 Addenda. Any interpretations, corrections or changes to the specifications and plans will be made by addenda no later than forty-eight (48) hours prior to the bid opening. Addenda will be posted on the Purchasing web site. Vendors are responsible for monitoring the web site in order to remain informed on addenda. Vendors shall acknowledge receipt of all addenda with submission of bid.

1.16 General Bid Bond/Surety Requirements. Failure to furnish bid bond/surety, if requested, will result in bid being declared non-responsive. Non-responsive bids will not be considered for award.

1.17 General Insurance Requirements. Failure to furnish Affidavit of Insurance, if required in these specifications, will result in bid being declared non-responsive. Non-responsive bids will not be considered for award.

1.18 Responsiveness. A responsive bid shall substantially conform to the requirements of this Invitation to Bid and/or specifications contained herein. Bidders who substitute any other terms, conditions, specifications and/or requirements or who qualify their bids in such a manner as to nullify or limit their liability to the contracting entity shall have their bids deemed non-responsive. Also, bids containing any clause that would limit contracting authority shall be considered non-responsive. Examples of non-responsive bids include but shall not be limited to: a) bids that fail to conform to required delivery schedules as set forth in the bid request; b) bids with prices qualified in such a manner that the bid price cannot be determined, such as with vague wording that may include “price in effect at the time of delivery,” and c) bids made contingent upon award of other bids currently under consideration.

1.19 Responsible Standing of Bidder. To be considered for award, bidder must at least: have the ability to obtain adequate financial resources, be able to comply with required or proposed delivery/completion schedule, have a satisfactory record of performance; have a satisfactory record of integrity and ethics, and be otherwise qualified and eligible to receive award.

1.20 Proprietary Data. Bidder may, by written request, indicate as confidential any portion(s) of a bid that contain proprietary information, including manufacturing and/or design processes exclusive to the vendor. Jefferson County will protect from public disclosure such portions of a bid, unless directed otherwise by legal authority, including existing Open Records Acts.

1.21 Public Bid Opening. Bidders are invited to be present at the opening of bids. After the official opening of bids, a period of not less than one week is necessary to evaluate bids. The amount of time necessary for bid evaluation may vary and is determined solely by the County. Following the bid evaluation, all bids submitted are available for public review.

2. Inspection of Site

2.1 Each bidder should visit the site of the proposed work and become fully acquainted with the existing conditions there and should fully inform himself as to the facilities involved, the difficulties and restrictions attending the performance of the contract. The bidder should thoroughly examine and familiarize himself with the drawings, technical specifications and all other contract documents. The contractor by the execution of the contract shall in no way be relieved of any obligation under it due to his failure to receive or examine any form

or legal document or to visit the site or acquaint himself with the conditions there existing. The city/county will be justified in rejecting any claim based on lack of inspection of the site prior to the bid.

3. Performance

3.1 Design, Strength, and Quality. Design, strength, and quality of materials and workmanship must conform to the highest standards of manufacturing and engineering practices. The apparent silence of specifications and/or plans as to any detailed description concerning any point shall be regarded as meaning that only the best commercial practices are to prevail. All interpretations of these specifications and/or plans shall be made on the basis of this statement.

3.2 Age and Manufacture. All tangible goods being bid must be new and unused, unless otherwise specified, in first-class condition, of current manufacture, and furnished ready to use. All items not specifically mentioned that are required for a complete unit shall be furnished.

3.3 Delivery Location. All deliveries will be made to the address(es) specified on the purchase order during normal working hours of 8:00 a.m. to 4:00 p.m., Monday through Friday, unless otherwise authorized by the Purchasing Agent or designee.

3.4 Delivery Schedule. Delivery time may be an important consideration in the evaluation of best value. The maximum number of days necessary for delivery ARO shall be stated in the space, if provided, on the bid form.

3.5 Delivery Charges. All delivery and freight charges, F.O.B. destination shown on Jefferson County purchase order, as necessary to perform contract are to be included in the bid price.

3.6 Installation Charges. All charges for assembly, installation and set-up shall be included in the bid price. Unless otherwise stated, assembly, installation and set-up will be required.

3.7 Operating Instructions and Training. Clear and concise operating instructions and descriptive literature will be provided in English, if requested. On-site detailed training in the safe and efficient use and general maintenance of item(s) purchased shall be provided as needed at the request of Jefferson County. Instructions and training shall be at no additional cost to the County.

3.8 Storage. Bidder agrees to provide storage of custom ordered materials, if requested, for up to thirty (30) calendar days.

3.9 Compliance with Federal, State, County, and Local Laws. Bids must comply with all federal, state, county and local laws, including, but not limited to, all applicable standard safety, emission, and noise control requirements. Any vehicles or equipment shall contain all standard safety, emission, and noise control requirements required for the types and sizes of equipment at the time of their manufacture. The contractor agrees, during the performance of work or service, to comply with all applicable codes and ordinances of Jefferson County or the State of Texas as they may apply, as these laws may now read, or as they may hereafter be changed or amended.

3.10 OSHA. The bidder will certify all equipment complies with all regulations and conditions stipulated under the Williams-Steiger Occupational Safety and Health Act of 1971, as amended. The successful bidder will further certify that all items furnished under this project will conform and comply with federal and State of Texas OSHA standards. The successful bidder will agree to indemnify and hold harmless Jefferson County for any and all damages that may be assessed against the County.

3.11 Patents and Copyrights. The successful vendor agrees to protect the County from claims involving infringements of patents and/or copyrights.

3.12 Samples, Demonstrations and Testing. At Jefferson County's request and direction, bidder shall provide product samples and/or testing of items bid to ensure compliance with specifications. Samples, demonstrations and/or testing may be requested at any point prior to or following bid award. Samples, demonstrations and/or testing may be requested upon delivery and/or any point during the term of resulting contract. All samples (including return thereof), demonstrations, and/or testing shall be at the expense of the bidder/vendor.

3.13 Acceptability. All articles enumerated in the bid shall be subject to inspection by an officer designated for that purpose by Jefferson County. If found inferior to the quality called for, or not equal in value to the specifications, deficient in workmanship or otherwise, this fact shall be certified to the Purchasing Agent, who shall have the right to reject the whole or any part of the same. Items and/or work determined to be contrary to specifications must be replaced at the vendor's expense. Inferior items not retrieved by the vendor within thirty (30) calendar days, or an otherwise agreed upon time, shall become the property of the County. If disposal of such items warrants an expense, an amount equal to the disposal expense will be deducted from amounts payable to the vendor.

3.14 Maintenance. Maintenance required for equipment bid should be available in Jefferson County by a manufacturer authorized maintenance facility. Cost for this service shall be shown on the bid sheet as requested or on a separate sheet, as required. If Jefferson County opts to include maintenance, it shall be so stated in the purchase order and said cost will be included. Service will commence only upon expiration of applicable warranties and should be priced accordingly.

3.15 Material Safety Data Sheets. Under the "Hazardous Communications Act," common known as the "Texas Right to Know Act," a bidder must provide the user department, with each delivery, material safety data sheets which are applicable to hazardous substances defined in the Act. Failure of the bidder to furnish this documentation, will be cause to reject any bid applying thereto.

3.16 Evaluation. Evaluation shall be used as a determinant as to which services are the most efficient and/or most economical for the County. It shall be based on all factors having a bearing on price and performance of the items in the user environment. All bids are subject to tabulation by the Jefferson County Purchasing Department and recommendation to Jefferson County Commissioners' Court. Compliance with all bid requirements and needs of the using department are considered in evaluating bids. Pricing is not the only criteria for making a recommendation. The Jefferson County Purchasing Department reserves to right to contact any bidder, at any time, to clarify, verify or requirement information with regard to this bid.

4. Purchase Orders and Payment

4.1 Purchase Orders. A purchase order(s) shall be generated by the Jefferson County Purchasing Agent to the successful vendor. The purchase order number must appear on all itemized invoices and packing slips. The County will not be held responsible for any work orders placed and/or performed without a valid current purchase order number. Payment will be made for all services rendered and accepted by the contract administrator for which a valid invoice has been received.

4.2 Invoices. All invoices shall reference the Purchase Order number. Invoices shall reference the bid item number or a detailed description for each item invoiced. If an item purchased and itemized on the invoice does not correspond to an item in any of the categories awarded to the vendor, invoice shall reference the item as "N/C" to indicate that it is a non-contract item. This requirement is to assist the County in verifying contract pricing on all invoices. Payment will be made under terms of net thirty (30) days unless otherwise agreed upon by seller and the purchasing department.

4.3 Prompt Payment. In accordance with the State of Texas Prompt Payment Act, Article 601f V.T.C.S., payment will be made after receive and acceptance by the County of the merchandise ordered and of a valid invoice. Successful bidder(s) is required to pay subcontractors within ten (10) days after the successful bidder receives payment from the County.

4.4 Funding. Jefferson County is operated and funded on an October 1 to September 30 basis; accordingly, the County reserves the right to terminate, without liability to the County, any contract for which funding is not available.

5. Contract

5.1 Contract Definition. The General Conditions of Bidding and Terms of Contract, Specifications, Plans, Bidding Forms, Addenda, and any other documents made a part of this bid shall constitute the complete bid. This bid, when duly accepted by Jefferson County, shall constitute a contract equally binding between the successful bidder and Jefferson County.

5.2 Changes in the Work

5.2.1 The Owner may make changes in the scope of work required to be performed by the Contractor under the Contract without relieving or releasing the Contractor from any of his obligations under the Contract or any guarantee given by him pursuant to the Contract provisions, and without affecting the validity of the guaranty bonds, and without relieving or releasing the surety or sureties of said bonds. All such work shall be executed under the terms of the original Contract unless it is expressly provided otherwise. Additionally, all such change orders must be approved by the Jefferson County Purchasing Department prior to execution of same.

5.2.2 Except for the purpose of affording protection against any emergency endangering health, life, limb or property, the Contractor shall make no change in the materials used or in the specified manner of constructing and/or installing the improvements or supply additional labor, services or materials beyond that actually required for the execution of the Contract, unless in pursuance of a written order from the Owner authorizing the Contractor to proceed with the change. No claim for an adjustment of the Contract Price will be valid unless so ordered.

5.2.3 If applicable unit prices are contained in the Agreement, the Owner may order the Contractor to proceed with desired unit prices specified in the Contract; provided that in case of a unit price contract the net value of all changes does not increase the original total amount of the agreement by more than twenty-five percent (25%) or decrease the original the total amount by eighteen percent (18%).

5.3 Change Order. No different or additional terms will become part of this contract with the exception of a change order. No oral statement of any person shall modify or otherwise change, or affect the terms, conditions or specifications stated in the resulting contract. All change orders to the contract will be made in writing and at the discretion and approval of Jefferson County. No change order will be binding unless signed by an authorized representative of the County and the vendor.

5.3.1 Each change order shall include in its final form:

5.3.2.1 A detailed description of the change in the work.

5.3.2.2 The Contractor's proposal (if any) or a confirmed copy thereof.

5.3.2.3 A definite statement as to the resulting change in the contract price and/or time.

5.3.2.4 The statement that all work involved in the change shall be performed in accordance with contract requirements except as modified by the change order.

5.3.2.5 The procedures as outlined in this Section for a unit price contract also apply in any lump sum contract.

5.4 Claims for Extra Cost

5.4.1 If the Contractor claims that any instructions by Drawings or otherwise involve extra cost or extension of time, he shall, within ten days after the receipt of such instructions, and in any event before proceeding to execute the work, submit his protest thereto in writing to the Owner, stating clearly and in detail the basis of his objections. No such claim will be considered unless so made.

5.4.2 Claims for additional compensation for extra work, due to alleged errors in ground elevations, contour lines, or bench marks, will not be recognized unless accompanied by certified survey data, made prior to the time the original ground was disturbed, clearly showing that errors exist which resulted, or would result, in handling more material, or performing more work, than would be reasonably estimated from the Drawings and maps issued.

5.4.3 Any discrepancies which may be discovered between actual conditions and those represented by the Drawings and maps shall be reported at once to the Owner and

work shall not proceed except at the Contractor's risk, until written instructions have been received by him from the Owner.

5.4.4 If, on the basis of the available evidence, the Owner determines that an adjustment of the Contract Price and/or time is justifiable, a change order shall be executed.

5.5 Price Re-determination. A price re-determination may be requested at the time of annual renewal. All requests for price re-determination shall be in written form. Cause for such request, i.e., manufacturer's direct cost, postage rates, Railroad Commission rates, Federal/State minimum wage law, Federal/State unemployment taxes, F.I.C.A, Insurance Coverage Rates, etc., shall be substantiated in writing by the source of the cost increase. The bidder's past experience of honoring contracts at the bid price will be an important consideration in the evaluation of the lowest and best bid. Jefferson County reserves the right to accept or reject any/all requests for price re-determination as it deems to be in the best interest of the County.

5.6 Termination, Delays, and Liquidated Damages

5.6.1 **Right of the Owner (Jefferson County) to Terminate Contract.** In the event that any of the provisions of this contract are violated by the Contractor, or by any of his subcontractors, the Owner may serve written notice upon the Contractor and the Surety of its intention to terminate the contract. The notices shall contain the reasons for such intention to terminate the contract, and unless such violation or delay shall cease and satisfactory arrangement of correction be made within ten days, the contract shall, upon the expiration of said ten (10) days, cease and terminate. In the event of any such termination, the Owner shall immediately serve notice thereof upon the Surety and the Contractor. The Surety shall have the right to take over and perform the contract. Provided, however, that if the Surety does not commence performance thereof within ten (10) days from the date of the mailing to such Surety of notice of termination, the Owner may take over the work and complete the project by bid/contract or by force account at the expense of the Contractor and his Surety shall be liable to the Owner for any excess cost incurred. In such event the Owner may take possession of and utilize in completing the work, such materials, appliances, and plant as may be on the site of the work and necessary therefore.

5.6.2 **Liquidated Damages for Delays.** If the work is not completed within the time stipulated in the applicable bid for Lump Sum or Unit Price Contract provided, the Contractor shall pay to the Owner as fixed, agreed, and liquidated damages (it being impossible to determine the actual damages occasioned by the delay) the amount of $500.00 for each calendar day of delay, until the work is completed. The Contractor and his sureties shall be liable to the Owner for the amount thereof.

5.6.3 **Excusable Delays**

5.6.3.1 The right of the Contractor to proceed shall not be terminated nor shall the Contractor be charged with liquidated damages for any delays in the completion of the work due to:

5.6.3.2 Any acts of the Government, including controls or restrictions upon or requisitioning of materials, equipment, tools, or labor by reason of war, national defense, or any other national emergency;

5.6.3.3 Any acts of the Owner;

5.6.3.4 Causes not reasonably foreseeable by the parties to this Contract at the time of the execution of the Contract which are beyond the control and without the fault or negligence of the Contractor, including, but not restricted to, acts of God or of the public enemy, acts of another Contractor in the performance of some other contract with the Owner, fires, floods, epidemics, quarantine, restrictions, strikes, freight embargoes, and weather of unusual severity such as hurricanes, tornadoes, cyclones and other extreme weather conditions.

5.6.3.5 Provided, however, that the Contractor promptly notifies the Owner within ten (10) days in writing of the cause of the delay. Upon receipt of such notification, the Owner shall ascertain the facts and the cause and extent of delay. If, upon the basis of the facts and the terms of this contract, the delay is properly excusable, the Owner shall extend the time for completing the work for a period of time commensurate with the period of excusable delay.

5.7 Assignment or Novation. The Contractor shall not assign or transfer, whether by an assignment or novation, any of its rights, duties, benefits, obligations, liabilities, or responsibilities under this Contract without the written consent of the Owner; provided, however, that assignments to banks or other financial institutions may be made without the consent of the Owner. No assignment or novation of this Contract shall be valid unless the assignment or novation expressly provides that the assignment of any of the Contractor's rights or benefits under the Contract is subject to a prior lien for labor performed, services rendered, and materials, tools, and equipment supplied for the performance of the work under this Contract in favor of all persons, firms, or corporations rendering such labor or services or supplying such materials, tools, or equipment.

5.8 Disputes

5.8.1 All disputes arising under this Contract or its interpretation except those disputes covered by FEDERAL LABOR STANDARDS PROVISIONS whether involving law or fact or both, or extra work, and all claims for alleged breach of contract shall, within ten (10) days of commencement of the dispute, be presented by the Contractor to the Owner for decision. Any claim not presented within the time limit specified in this paragraph shall be deemed to have been waived, except that if the claim is of a continuing character and notice of the claim is not given within ten (10) days of its commencement, the claim will be considered only for a period commencing ten (10) days prior to the receipt of the Owner.

5.8.2 The Contractor shall submit in detail his claim and his proof thereof.

5.8.3 If the Contractor does not agree with any decision of the Owner, he shall in no case allow the dispute to delay the work but shall notify the Owner promptly that he is proceeding with the work under protest.

5.9 Conflict of Interest

5.9.1 Employees of the County are not permitted to maintain financial interest in, or receive payment, directly or indirectly, borrow from, lend to, invest in, or engage in any substantial financial transaction with any individual, organization, supplier, or subcontractor who does business with the County without disclosure.

5.9.2 When conflict of interest is discovered, it shall be grounds for termination of contract.

5.10 Injuries or Damages Resulting from Negligence. Successful bidder shall defend, indemnify and save harmless Jefferson County and all its officers, agents and employees from all suits, actions, or other claims of any character, name and description brought for or on account of any injuries or damages received or sustained by any person, persons, or property on account of any negligent act or fault of the successful bidder, or of any agent, employee, subcontractor or supplier in the execution of, or performance under, any contract which may result from bid award. Successful bidder shall pay any judgment with related court costs, which may be obtained against Jefferson County growing out of such injury or damages.

5.11 Interest by Public Officials. No public official shall have interest in this contract except, in accordance with Texas Local Government Code.

5.12 Warranty. The successful bidder shall warrant that all materials utilized in the performance of this contract shall conform to the proposed specifications and/or all warranties as stated in the Uniform Commercial Code and be free from all defects in material, workmanship and title.

5.13 Uniform Commercial Code. The successful bidder and Jefferson County agree that both parties have all rights, duties, and remedies available as stated in the Uniform Commercial Code, subject to and enforceable according to the laws of the State of Texas.

5.14 Venue. This agreement will be governed and construed according to the laws of the State of Texas. This agreement is performable in the County of Jefferson, Texas.

5.15 Sale, Assignment, or Transfer of Contract. The successful bidder shall not sell, assign, transfer or convey this contract, in whole or in part, without the prior written consent of Jefferson County.

5.16 Silence of Specifications. The apparent silence of these specifications as to any detailed description concerning any point, shall be regarded as meaning that only the best commercial practices are to prevail. All interpretations of these specifications shall be made on the basis of this statement.

6. Execution of Agreement/Performance and Payment Bonds

6.1 Within ten (10) days after the date of the signing of a contract, the bidder shall furnish a performance bond to the County for the full amount of the contract, if the contract exceeds one hundred thousand dollars ($100,000). If the contract is for one hundred thousand dollars ($100,000) or less, the County may provide that no money be paid to the contractor until completion and acceptance of the work or the fulfillment of the purchase obligation to the County.

6.2 The failure of the successful bidder to execute the agreement and supply the required bonds within ten (10) days after the prescribed forms are presented for signature, or within such extended period as Jefferson County may grant, shall constitute a default and Jefferson County may, at its option, either award the contract to the next lowest responsible bidder, or re-advertise for bids. In either case, Jefferson County may charge against the bidder the difference between the amount of the bid and the amount for which a contract is subsequently executed, irrespective of whether this difference exceeds the amount of the bid bond. If a more favorable bid is received through re-advertisement, the defaulting bidder shall have no claim against Jefferson County for a refund.

7. Statement of Bidder's Qualifications

7.1 Each bidder shall submit on the form furnished for that purpose a statement of the bidder's qualifications. Jefferson County shall have the right to take such steps as it deems necessary to determine the ability of the bidder to perform his obligations under the contract, and the bidder shall furnish Jefferson County all such information and data for this purpose as it may request. The right is reserved to reject any bid where an investigation of the available data does not satisfy Jefferson County that the bidder is qualified to carry out properly the terms of the contract.

Special Requirements/Instructions

The following requirements and instructions supersede General Requirements where applicable.

1. Bid Requirement

Each bidder shall ensure that required parts of the bid are completed with accuracy and submitted as per the requirements within this specifications packet, including any addenda.

Bidder is responsible for submitting one (1) *original* bid copy to include a completed copy of this specifications packet in its entirety; and three (3) numbered bid *hard copies* to include at a minimum all pages requiring completion and/or marked with instructions to be returned with bid submission and any other documentation requested within these specifications.

All bids shall be tightly sealed in an opaque envelope or box and plainly marked "SEALED BID." The outside of the envelope or box shall also include: Bid Number, Bid Name, Bid Due Date, Bidder's Name and Address; and shall be addressed to the Purchasing Agent.

Jefferson County shall not be responsible for any effort or cost expended in the preparation of a response to this IFB. All protests should be coordinated through the Purchasing Office prior to award recommendation to Commissioners' Court.

2. Vendor Registration: SAM (System for Award Management)

Vendors doing business with Jefferson County are **required** to be registered with The System for Award Management (SAM), with an "active" status. The System for Award Management (SAM) is the Official U.S. Government system that consolidated the capabilities of CCR/FedReg, ORCA, and EPLS. There is NO fee to register for this site. Entities may register at no cost directly from the SAM website at: https://www.sam.gov

Bid Respondents are strongly encouraged to review their firm's SAM (System for Award Management) status prior to Bid Submission.

3. Awarded Vendor(s): Submission of FORM 1295 (Texas Ethics Commission)

As of January 1, 2016, per House Bill 1295, the Texas Ethics Commission (TEC) requires **all awarded vendors** to complete a Certificate of Interested Parties (FORM 1295) at time of notification of award. **Awarded Vendors** must visit the TEC website link below, enter the required information on Form 1295, and print a copy of the completed form. The form will include a certification of filing that will contain a unique certification number.

At the time of award, the Jefferson County Purchasing Department will submit a request to the Awarded Vendor to both:

1. Submit FORM 1295 online via the Texas Ethics Commission website link below.

2. Submit a printed copy of FORM 1295, signed by an Authorized Agent of the Awarded Vendor and notarized to the Jefferson County Purchasing Department.

FORM 1295, Completion Instructions, and Login Instructions are available via the Texas Ethics Commission Website at: https://www.ethics.state.tx.us/whatsnew/elf_info_form1295.htm

4. Multiple Vendor Award

Jefferson County reserves the right to award this contract to more than one vendor at the County's discretion.

5. Delivery

If delivery is required, all items must be packaged so as to be protected from damage during shipping and handling. Any item(s) damaged in shipping must be replaced in kind, or repaired, by the contractor, at the discretion of, and at no additional charge to, Jefferson County.

6. Payment

Jefferson County will pay original invoices that clearly itemize the goods and/or services provided as to quantity, part number, description, price, applicable discount (if any), labor charges showing time differential, if applicable and if previously agreed to, and delivery, installation, and set-up costs, if applicable and if previously agreed to. Only charges as stated on the Bid Form(s) submitted as a part of the bid will be considered.

Invoices must indicate Jefferson County as applicable, the address to which the product(s) and/or service(s) were delivered, and the applicable purchase order number. Invoices will be matched to delivery tickets prior to payment; therefore, all delivery tickets should have an accurate description of the product(s) and/or service(s).

Invoices shall be submitted to: Jefferson County Auditing Department, Attention: Accounts Payable, 1149 Pearl Street, 7th floor, Beaumont, TX 77701.

7. Payments to Contractor

7.1 Partial Payments

7.1.1 The Contractor shall prepare his requisition for partial payment as of the last day of the month and submit it, with the required number of copies, to the Jefferson County Auditor, Patrick Swain, for his approval. The amount of the payment due the Contractor shall be determined by adding to the total value of work completed to date, the value of materials properly stored on the site and deducting (1) ten percent (10%) of the total amount, to be retained until final payment and (2) the amount of all previous payments. The total value of work completed to date shall be based on the estimated quantities of work completed and on the unit prices contained in the agreement. The value of materials properly stored on the site shall be based upon the estimated quantities of such materials and the invoice prices. Copies of all invoices shall be available for inspection of the Jefferson County Engineer.

7.2.2 Monthly or partial payments made by the Owner to the Contractor are moneys advanced for the purpose of assisting the contractor to expedite the work of construction. The Contractor shall be responsible for the care and protection of all materials and work upon which payments have been made until final acceptance of such work and materials by the Owner. Such payments shall not constitute a waiver of the right of the Owner to require the fulfillment of all terms of the Contract and the delivery of all improvements embraced in this Contract complete and satisfactory to the Owner in all details.

7.2 Final Payment

7.2.1 After final inspection and acceptance by the Owner of all work under the Contract, the Contractor shall prepare his requisition for final payment which shall be based upon the careful inspection of each item of work at the applicable unit prices stipulated in the Agreement. The total amount of the final payment due the Contractor under this contract shall be the amount computed as described above less all previous payments.

7.2.2 The Owner before paying the final estimate, shall require the Contractor to furnish releases or receipts from all subcontractors having performed any work and all persons having supplied materials, equipment (installed on the Project) and services to the Contractor, if the Owner deems it necessary in order to protect its interest. The Owner may, if it deems such action advisable, make payment in part or in full to the Contractor without requiring the furnishing of such releases or receipts and any payments made shall in no way impair the obligations of any surety or sureties furnished under this Contract.

7.2.3 Any amount due the Owner under Liquidated Damages, shall be deducted from the final payment due the contractor.

7.3 Payments Subject to Submission of Certificates. Each payment to the Contractor by the Owner shall be made subject to submission by the Contractor of all written certifications required of him and his subcontractors.

7.4 Withholding Payments. The Owner may withhold from any payment due the Contractor whatever is deemed necessary to protect the Owner, and if so elects, may also withhold any amounts due from the Contractor to any subcontractors or material dealers, for work performed or material furnished by them. The foregoing provisions shall be construed solely for the benefit of the Owner and will not require the Owner to determine or adjust any claims or disputes between the Contractor and his subcontractors or material dealers, or to withhold any moneys for their protection unless the Owner elects to do so. The failure or refusal of the Owner to withhold any moneys from the Contractor shall in no way impair the obligations of any surety or sureties under any bond or bonds furnished under this Contract.

8. Usage Reports

Jefferson County reserves the right to request, and receive at no additional cost, up to two (2) times during the contract period, a usage report detailing the products and/or services furnished to date under a contract resulting from this IFB. The reports must be furnished no later than five (5) working days after written request and itemize all purchases to date by Jefferson County department, description of each item purchased, including manufacturer, quantity of each item purchased, per unit and extended price of each item purchased, and total amount and price of all items purchased.

9. Insurance

The contractor (including any and all subcontractors as defined in Section 10.1.3 below) shall, at all times during the term of this contract, maintain insurance coverages with not less than the type and requirements shown below. Such insurance is to be provided at the sole cost of the contractor. These requirements do not establish limits of the contractor's liability.

All policies of insurance shall waive all rights of subrogation against the County, its officers, employees and agents; a copy of the policy wording or endorsement is required.

Contractor shall furnish Jefferson County with Certificate of Insurance naming Jefferson County as additional insured and will provide the actual policy wording or endorsement showing as such.

All insurance must be written by an insurer licensed to conduct business in the State of Texas.

Minimum Insurance Requirements

Public Liability, including Products & Completed Operations	$1,000,000
Excess Liability	$1,000,000

Property Insurance (policy below that is applicable to this project):

Improvements & Betterments Policy: Improvements/Remodeling (for Lease Tenants)
Builder's Risk Policy: Structural Coverage for Construction Projects
Installation Floater Policy: Improvements/Alterations to Existing Structure

Workers' Compensation	Statutory Coverage (see attached)

10. Workers' Compensation Insurance

10.1 Definitions:

10.1.1 **Certificate of coverage ("Certificate")** – A copy of a certificate of insurance, a certificate of authority to self-insure issued by the commission, or a coverage agreement, DWC-81, DWC-82, DWC-83, or DWC-84 showing statutory workers' compensation insurance coverage for the person's or entity's employees providing services on a project, for the duration of the project.

10.1.2 **Duration of the project** – Includes the time from the beginning of the work on the project until the contractor's/person's work on the project has been completed and accepted by the governmental entity.

10.1.3 **Persons providing services on the project ("subcontractor") in article 406.096** – Includes all persons or entities performing all or part of the services under the contractor has undertaken to perform on the project, regardless of whether that person contracted directly with the contractor and regardless of whether that person has employees. This includes, without limitation, independent contractors, subcontractor, leasing companies, motor carriers, owner-operators, employees of any such entity, or employees of any entity which furnishes persons to provide services on the project. "Services" includes, without limitation, providing, hauling or delivering equipment or materials, or providing labor, transportation, or other service related to a project. "Services" does not include activities unrelated to the project, such as food/beverage vendors, office supply deliveries, and delivery of portable toilets.

10.2 The Contractor shall provide coverage, based on proper reporting of classification code and payroll amounts and filing any coverage agreements, which meets the statutory requirements of Texas Labor Code, Section 401.011(44) for all employees of the contractor providing services on the project, for the duration of the project.

10.3 The Contractor must provide a certificate of coverage to the governmental entity prior to being awarded the contract – refer to Section 9 above.

10.4 If the coverage period shown on the Contractor's current certificate of coverage ends during the duration of the project, the Contractor must, prior to the end of the coverage period, file a new certificate of coverage with the governmental entity showing that coverage has been extended.

10.5 The Contractor shall obtain from each person providing services on a project, and provide to the governmental entity:

10.5.1 A certificate of coverage, prior to that person beginning work on the project, so the governmental entity will have on file certificates of coverage showing coverage for all persons providing services on the project; and

10.5.2 No later than seven (7) days after receipt by the Contractor, a new certificate of coverage showing extension of coverage, if the coverage period shown on the current certificate ends during the duration of the project.

10.6 The Contractor shall retain all required certificates of coverage for the duration of the project and for one (1) year thereafter.

10.7 The Contractor shall notify the governmental entity in writing by certified mail or personal delivery, within ten (10) days after the contractor knew or should have known, of any change that materially affects the provision of coverage of any person providing services on the project.

10.8 The Contractor shall post on each project site a notice, in the text, form and manner prescribed by the Texas Department of Workers' Compensation, informing all persons providing services on the project that they are required to be covered, and stating how a person may verify coverage and report lack of coverage.

10.9 The Contractor shall contractually require each person with whom it contracts to provide services on a project to:

10.9.1 Provide coverage, based on reporting of classification codes and payroll amounts and filing of any coverage agreements, which meets the statutory requirements of Texas Labor Code, Section 401.011(44) for all its employees providing services on the project, for the duration of the project.

10.9.2 Provide to the Contractor, prior to that person beginning work on the project a certificate of coverage showing that coverage is being provided for all employees of the person providing services on the project, for the duration of the project.

10.9.3 Provide the Contractor, prior to the end of coverage period, a new certificate of coverage showing extension of coverage, if the coverage period shown on the current certificate of coverage ends during the duration of the project.

10.9.4 Obtain from each person with whom it contracts, and provide to the Contractor:

10.9.4.1 A certificate of coverage, prior to the other person beginning work on the project; and

10.9.4.2 the coverage period, if the coverage period shown on the current certificate of a new certificate of coverage showing extension of coverage, prior to the end of coverage ends during the duration of the project.

10.9.5 Retain all required certificates of coverage on file for the duration of the project and for one (1) year thereafter.

10.9.6 Notify the governmental entity in writing by certified mail or personal delivery, within ten (10) days after the person knew or should have known, of any change that materially affects the provision of coverage of any person providing services on the project; and

10.9.7 Contractually require each person with whom it contracts to perform as required by paragraphs 10.1. – 10.7., with the certificates of coverage to be provided to the person for whom they are providing services.

10.10 By signing this contract or providing or causing to be provided a certificate of coverage, the Contractor is representing to the governmental entity that all employees of the contractor who will provide services of the project will be covered by workers' compensation coverage for the duration of the project, that the coverage will be based on proper reporting of classification codes and payroll amounts, and that all coverage agreements will be filed with the appropriate insurance carrier or, in the case of a self-insured, with the commission's Division of Self-Insurance Regulation. Providing false or misleading information may subject the contractor to administrative penalties, criminal penalties, civil penalties, or other civil actions.

10.11 The Contractor's failure to comply with any of these provisions is a breach of contract by the Contractor which entitles the governmental entity to declare the contract void if the Contractor does not remedy the breach within ten (10) days after receipt of notice of breach from the governmental entity.

11. Acknowledgement of Federal Funding from The Department of Homeland Security

All recipients must acknowledge their use of federal funding when issuing statements, press releases, requests for proposals, bid invitations, and other documents describing projects or programs funded in whole or in part with Federal funds.

12. Project Provisions

The following provisions are also included by reference:

- Davis Bacon Act (29 CFR Part 5.5)
- EEO Compliance Reports (41 CFR Part 60-1.7)
- Trade Restriction Certification (49 CFR Part 30)
- Buy American Preferences (Title 49 United States Code, Chapter 501)
- Certification of Non-Segregated Facilities (41 CFR Part 60-1.8)
- Certification Regarding Debarment, Suspension, Ineligibility, and Voluntary Exclusion (49 CFR Part 29)

Posted Notices:
Prior to commencement of construction activities the Contractor must post the following documents in a prominent and accessible place where they may be easily viewed by all employees of the prime Contractor and by all employees of subcontractors engaged by the prime Contractor:
Equal Employment Opportunity(EEO) Poster "Equal Employment Opportunity is the Law" in accordance with the Office of Federal Contract Compliance Programs Executive Order 11246, as amended; Davis Bacon Wage Poster (WH 1321) - DOL "Notice to All Employees" Poster; and Applicable Davis-Bacon Wage Rate Determination. These notices must remain posted until final acceptance of the work by the Owner.

13. General Civil Rights Provisions

The contractor agrees that it will comply with pertinent statutes, Executive Orders and such rules as are promulgated to ensure that no person shall, on the grounds of race, creed, color, national origin, sex, age, or handicap be excluded from participating in any activity conducted with or benefiting from Federal assistance.

This provision binds the contractors from the bid solicitation period through the completion of the contract.

This provision is in addition to that required of Title VI of the Civil Rights Act of 1964.

14. Civil Rights – Title VI Assurances

Title VI Solicitation Notice:

The Owner, in accordance with the provisions of Title VI of the Civil Rights Act of 1964 (78 Stat. 252, 42 U.S.C.§§ 2000d to 2000d-4) and the Regulations, hereby notifies all bidders that it will affirmatively ensure that any contract entered into pursuant to this advertisement, disadvantaged business enterprises will be afforded full and fair opportunity to submit bids in response to this invitation and will not be discriminated against on the grounds of race, color, or national origin in consideration for an award.

During the performance of this contract, the contractor, for itself, its assignees, and successors in Interest (hereinafter referred to as the "contractor") agrees as follows:

1. **Compliance with Regulations:** The contractor (hereinafter includes consultants) will comply with the Title VI List of Pertinent Nondiscrimination Statutes and Authorities, as they may be amended from time to time, which are herein incorporated by reference and made a part of this contract.

2. **Non-discrimination:** The contractor, with regard to the work performed by it during the contract, will not discriminate on the grounds of race, color, or national origin in the selection and retention of subcontractors, including procurements of materials and leases of equipment. The contractor will not participate directly or indirectly in the discrimination prohibited by the Acts and the Regulations, including employment practices when the contract covers any activity, project, or program set forth in Appendix B of 49 CFR part 21.

3. **Solicitations for Subcontracts, Including Procurements of Materials and Equipment:**
In all solicitations, either by competitive bidding, or negotiation made by the contractor for work to be performed under a subcontract, including procurements of materials, or leases of equipment, each potential subcontractor or supplier will be notified by the contractor of the contractor's obligations under this contract and the Acts and the Regulations relative to Non-discrimination on the grounds of race, color, or national origin.

4. **Information and Reports:** The contractor will provide all information and reports required by the Acts, the Regulations, and directives issued pursuant thereto and will permit access to its books, records, accounts, other sources of information, and its facilities as may be determined by the County or Department of Homeland Security to be pertinent to ascertain compliance with such Acts, Regulations, and instructions. Where any information required of a contractor is in the exclusive possession of another who fails or refuses to furnish the information, the contractor will so certify to the County or Department of Homeland Security, as appropriate, and will set forth what efforts it has made to obtain the information.

5. **Sanctions for Noncompliance**: In the event of a contractor's noncompliance with the Nondiscrimination provisions of this contract, the County will impose such contract sanctions as it or the Department of Homeland Security may determine to be appropriate, including, but not limited to:

a. Withholding payments to the contractor under the contract until the contractor complies; and/or
b. Cancelling, terminating, or suspending a contract, in whole or in part.

6. **Incorporation of Provisions:** The contractor will include the provisions of paragraphs one through six in every subcontract, including procurements of materials and leases of equipment, unless exempt by the Acts, the Regulations and directives issued pursuant thereto. The contractor will take action with respect to any subcontract or procurement as the County or Department of Homeland Security may direct as a means of enforcing such provisions including sanctions for noncompliance. Provided, that if the contractor becomes involved in, or is threatened with litigation by a subcontractor, or supplier because of such direction, the contractor may request the sponsor to enter into any litigation to protect the interests of the sponsor. In addition, the contractor may request the United States to enter into the litigation to protect the interests of the United States.

15. Notice of Requirement for Affirmative Action

1. The Offeror's or Bidder's attention is called to the "Equal Opportunity Clause" and the "Standard Federal Equal Employment Opportunity Construction Contract Specifications" set forth herein

2. The goals and timetables for minority and female participation, expressed in percentage terms for the contractor's aggregate workforce in each trade on all construction work in the covered area, are as follows:

A. Timetables

B. Goals for minority participation for each trade (Vol. 45 Federal Register pg. 65984 10/3/80)

C. Goals for female participation in each trade (6.9%)

These goals are applicable to all of the contractor's construction work (whether or not it is Federal or federally-assisted) performed in the covered area. If the contractor performs construction work in a geographical area located outside of the covered area, it shall apply the goals established for such geographical area where the work is actually performed. With regard to this second area, the contractor is also subject to the goals for both federally funded and non-federally funded construction regardless of the percentage of federal participation in funding.

The contractor's compliance with the Executive Order and the regulations in 41 CFR Part 60-4 shall be based on its implementation of the Equal Opportunity Clause, specific affirmative action obligations required by the specifications set forth in 41 CFR 60-4.3(a), and its efforts to meet the goals. The hours of minority and female employment and training shall be substantially uniform throughout the length of the contract, and in each trade, and the contractor shall make a good faith effort to employ minorities and women evenly on each of its projects. The transfer of minority or female employees or trainees from contractor to contractor or from project to project, for the sole purpose of meeting the contractor's goals, shall be a violation of the contract, the Executive Order, and the regulations in 41 CFR Part 60.

3. Compliance with the goals will be measured against the total work hours performed.

4. The contractor shall provide written notification to the Director, Office of Federal Contract Compliance Programs (OFCCP), within 10 working days of award of any construction subcontract in excess of $10,000 at any tier for construction work under the contract resulting from this solicitation. The notification shall list the name, address, and telephone number of the subcontractor; employer identification number of the subcontractor; estimated dollar amount of the subcontract; estimated starting and completion dates of subcontract; and the geographical area in which the subcontract is to be performed.

5. As used in this notice and in the contract resulting from this solicitation, the "covered area" is the Jefferson County, Texas.

16. Access to Records and Reports

The Contractor must maintain an acceptable cost accounting system. The Contractor agrees to provide the County, the Department of Homeland Security, or any of their duly authorized representatives access to any books, documents, papers, and records of the contractor which are directly pertinent to the specific contract for the purpose of making audit, examination, excerpts and transcriptions. The Contractor agrees to maintain all books, records and reports required under this contract for a period of not less than three years after final payment is made and all pending matters are closed.

17. Disadvantaged Business Enterprises

Contract Assurance (§ 26.13) - The contractor or subcontractor shall not discriminate on the basis of race, color, national origin, or sex in the performance of this contract. The contractor shall carry out applicable requirements of 49 CFR Part 26 in the award and administration of Department of Homeland Security assisted contracts. Failure by the contractor to carry out these requirements is a material breach of this contract, which may result in the termination of this contract or such other remedy, as the recipient deems appropriate.

Prompt Payment (§26.29))- The prime contractor agrees to pay each subcontractor under this prime contract for satisfactory performance of its contract no later than 30 days from the receipt of each payment the prime contractor receives from Owner. The prime contractor agrees further to return retainage payments to each subcontractor within {specify the same number as above} days after the subcontractor's work is satisfactorily completed. Any delay or postponement of payment from the above referenced time frame may occur only for good cause following written approval of the Owner. This clause applies to both DBE and non-DBE subcontractors.

18. Energy Conservation Requirements

The contractor agrees to comply with mandatory standards and policies relating to energy efficiency that are contained in the state energy conservation plan issued in compliance with the Energy Policy and Conservation Act (Public Law 94-163).

19. Federal Fair Labor Standards Act (Federal Minimum Wage)

All contracts and subcontracts that result from this solicitation incorporate the following provisions by reference, with the same force and effect as if given in full text. The contractor has full responsibility to monitor compliance to the referenced statute or regulation. The contractor must address any claims or disputes that pertain to a referenced requirement directly with the Federal Agency with enforcement responsibilities.

Requirement	Federal Agency with Enforcement Responsibilities
Federal Fair Labor Standards Act (29 USC 201)	U.S. Department of Labor – Wage and Hour Division

20. Lobbying and Influencing Federal Employees

The bidder or offeror certifies by signing and submitting this bid or proposal, to the best of his or her knowledge and belief, that:

1) No Federal appropriated funds have been paid or will be paid, by or on behalf of the bidder or offeror, to any person for influencing or attempting to influence an officer or employee of an agency, a Member of Congress, an officer or employee of Congress, or an employee of a Member of Congress in connection with the awarding of any Federal contract, the making of any Federal grant, the making of any Federal loan, the entering into of any cooperative agreement, and the extension, continuation, renewal, amendment, or modification of any Federal contract, grant, loan, or cooperative agreement.

2) If any funds other than Federal appropriated funds have been paid or will be paid to any person for influencing or attempting to influence an officer or employee of any agency, a Member of Congress, an officer or employee of Congress, or an employee of a Member of Congress in connection with this Federal contract, grant, loan, or cooperative agreement, the undersigned shall complete and submit Standard Form-LLL, "Disclosure Form to Report Lobbying," in accordance with its instructions.

This certification is a material representation of fact upon which reliance was placed when this transaction was made or entered into. Submission of this certification is a prerequisite for making or entering into this transaction imposed by section 1352, title 31, U.S. Code. Any person who fails to file the required certification shall be subject to a civil penalty of not less than $10,000 and not more than $100,000 for each such failure.

21. Occupational Safety and Health Act of 1970

All contracts and subcontracts that result from this solicitation incorporate the following provisions by reference, with the same force and effect as if given in full text. The contractor has full responsibility to monitor compliance to the referenced statute or regulation. The contractor must address any claims or disputes that pertain to a referenced requirement directly with the Federal Agency with enforcement responsibilities.

Requirement	Federal Agency with Enforcement Responsibilities
Occupational Safety and Health Act of 1970 (20 CFR Part 1910)	U.S. Department of Labor – Occupational Safety and Health Administration

22. Trade Restriction Clause

The contractor or subcontractor, by submission of an offer and/or execution of a contract, certifies that it:

a. is not owned or controlled by one or more citizens of a foreign country included in the list of countries that discriminate against U.S. firms published by the Office of the United States Trade Representative (USTR);

b. has not knowingly entered into any contract or subcontract for this project with a person that is a citizen or national of a foreign country on said list, or is owned or controlled directly or indirectly by one or more citizens or nationals of a foreign country on said list;

c. has not procured any product nor subcontracted for the supply of any product for use on the project that is produced in a foreign country on said list.

Unless the restrictions of this clause are waived by the Secretary of Transportation in accordance with 49 CFR 30.17, no contract shall be awarded to a contractor or subcontractor who is unable to certify to the above. If the contractor knowingly procures or subcontracts for the supply of any product or service of a

foreign country on said list for use on the project, the Department of Homeland Security may direct through the County cancellation of the contract at no cost to the Government.

Further, the contractor agrees that, if awarded a contract resulting from this solicitation, it will incorporate this provision for certification without modification in each contract and in all lower tier subcontracts. The contractor may rely on the certification of a prospective subcontractor unless it has knowledge that the certification is erroneous.

The contractor shall provide immediate written notice to the sponsor if the contractor learns that its certification or that of a subcontractor was erroneous when submitted or has become erroneous by reason of changed circumstances. The subcontractor agrees to provide written notice to the contractor if at any time it learns that its certification was erroneous by reason of changed circumstances.

This certification is a material representation of fact upon which reliance was placed when making the award. If it is later determined that the contractor or subcontractor knowingly rendered an erroneous certification, the Department of Homeland Security may direct through the County cancellation of the contract or subcontract for default at no cost to the Government.

Nothing contained in the foregoing shall be construed to require establishment of a system of records in order to render, in good faith, the certification required by this provision. The knowledge and information of a contractor is not required to exceed that which is normally possessed by a prudent person in the ordinary course of business dealings.

This certification concerns a matter within the jurisdiction of an agency of the United States of America and the making of a false, fictitious, or fraudulent certification may render the maker subject to prosecution under Title 18, United States Code, Section 1001.

23. Buy American Preferences

Offeror must follow the standards identified in the Buy American Act, 41 U.S.C. §§10a-10d. The Buy American Act requires that all supplies and construction materials purchased be produced in the United States, unless such materials are not reasonably available, or such a purchase would not be in the public interest. Grant recipients must follow the Federal Acquisition Regulations implementing the Buy American Act, 48 CFR Part 25.

24. Veteran's Preference

In the employment of labor (except in executive, administrative, and supervisory positions), preference must be given to Vietnam era veterans, Persian Gulf veterans, Afghanistan-Iraq war veterans, disabled veterans, and small business concerns owned and controlled by disabled veterans as defined in Title 49 United States Code, Section 47112. However, this preference shall apply only where the individuals are available and qualified to perform the work to which the employment relates.

25. Copeland "Anti-Kickback" Act

The United States Department of Labor Wage and Hours Division oversees the Copeland "Anti- Kickback" Act requirements. All contracts and subcontracts must meet comply with the Occupational Safety and Health Act of 1970. United States Department of Labor Wage and Hours Division can provide information regarding any specific clauses or assurances pertaining to the Copeland "Anti-Kickback" Act requirements required to be inserted in solicitations, contracts or subcontracts.

26. Davis-Bacon Labor Provisions

1. Minimum Wages

(i) All laborers and mechanics employed or working upon the site of the work will be paid unconditionally and not less often than once a week, and without subsequent deduction or rebate on any account (except such payroll deductions as are permitted by the Secretary of Labor under the Copeland Act (29 CFR Part 3)), the full amount of wages and bona fide fringe benefits (or cash equivalent thereof) due at time of payment computed at rates not less than those contained in the wage determination of the

Secretary of Labor which is attached hereto and made a part hereof, regardless of any contractual relationship which may be alleged to exist between the contractor and such laborers and mechanics.

Contributions made or costs reasonably anticipated for bona fide fringe benefits under section 1(b)(2) of the Davis-Bacon Act on behalf of laborers or mechanics are considered wages paid to such laborers or mechanics, subject to the provisions of paragraph (1)(iv) of this section; also, regular contributions made or costs incurred for more than a weekly period (but not less often than quarterly) under plans, funds, or programs which cover the particular weekly period, are deemed to be constructively made or incurred during such weekly period. Such laborers and mechanics shall be paid the appropriate wage rate and fringe benefits on the wage determination for the classification of work actually performed, without regard to skill, except as provided in 29 CFR Part 5.5(a)(4). Laborers or mechanics performing work in more than one classification may be compensated at the rate specified for each classification for the time actually worked therein: Provided, That the employer's payroll records accurately set forth the time spent in each classification in which work is performed. The wage determination (including any additional classification and wage rates conformed under (1)(ii) of this section) and the Davis- Bacon poster (WH 1321) shall be posted at all times by the contractor and its subcontractors at the site of the work in a prominent and accessible place where it can easily be seen by the workers.

(ii) (A) The contracting officer shall require that any class of laborers or mechanics, including helpers, which is not listed in the wage determination and which is to be employed under the contract shall be classified in conformance with the wage determination. The contracting officer shall approve an additional classification and wage rate and fringe benefits therefore only when the following criteria have been met:

(1) The work to be performed by the classification requested is not performed by a classification in the wage determination; and

(2) The classification is utilized in the area by the construction industry; and

(3) The proposed wage rate, including any bona fide fringe benefits, bears a reasonable relationship to the wage rates contained in the wage determination.

(B) If the contractor and the laborers and mechanics to be employed in the classification (if known) or their representatives, and the contracting officer agree on the classification and wage rate (including the amount designated for fringe benefits where appropriate), a report of the action taken shall be sent by the contracting officer to the Administrator of the Wage and Hour Division, Employment Standard

(C) The wage rate (including fringe benefits where appropriate) determined pursuant to subparagraphs (1)(ii) (B) or (C) of this paragraph, shall be paid to all workers performing work in the classification under this contract from the first day on which work is performed in the classification.

(iii) Whenever the minimum wage rate prescribed in the contract for a class of laborers or mechanics includes a fringe benefit which is not expressed as an hourly rate, the contractor shall either pay the benefit as stated in the wage determination or shall pay another bona fide fringe benefit or an hourly cash equivalent thereof.

(iv) If the contractor does not make payments to a trustee or other third person, the contractor may consider as part of the wages of any laborer or mechanic the amount of any costs reasonably anticipated in providing bona fide fringe benefits under a plan or program, Provided, That the Secretary of Labor has found, upon the written request of the contractor, that the applicable standards of the Davis-Bacon Act have been met. The Secretary of Labor may require the contractor to set aside in a separate account assets for the meeting of obligations under the plan or program.

2. Witholding

The Department of Homeland Security or the County shall upon its own action or upon written request of an authorized representative of the Department of Labor withhold or cause to be withheld from the contractor under this contract or any other Federal contract with the same prime contractor,

or any other Federally- assisted contract subject to Davis-Bacon prevailing wage requirements, which is held by the same prime contractor, so much of the accrued payments or advances as may be considered necessary to pay laborers and mechanics, including apprentices, trainees, and helpers, employed by the contractor or any subcontractor the full amount of wages required by the contract. In the event of failure to pay any laborer or mechanic, including any apprentice, trainee, or helper, employed or working on the site of work, all or part of the wages required by the contract, the Department of Homeland Security may, after written notice to the contractor, the County, applicant, or owner, take such action as may be necessary to cause the suspension of any further payment, advance, or guarantee of funds until such violations have ceased.

3. Payrolls and Basic records

(i) Payrolls and basic records relating thereto shall be maintained by the contractor during the course of the work and preserved for a period of three years thereafter for all laborers and mechanics working at the site of the work. Such records shall contain the name, address, and social security number of each such worker, his or her correct classification, hourly rates of wages paid (including rates of contributions or costs anticipated for bona fide fringe benefits or cash equivalents thereof of the types described in 1(b)(2)(B) of the Davis-Bacon Act), daily and weekly number of hours worked, deductions made and actual wages paid. Whenever the Secretary of Labor has found under 29 CFR 5.5(a)(1)(iv) that the wages of any laborer or mechanic include the amount of any costs reasonably anticipated in providing benefits under a plan or program described in section 1(b)(2)(B) of the Davis-Bacon Act, the contractor shall maintain records which show that the commitment to provide such benefits is enforceable, that the plan or program is financially responsible, and that the plan or program has been communicated in writing to the laborers or mechanics affected, and records which show the costs anticipated or the actual costs incurred in providing such benefits.

Contractors employing apprentices or trainees under approved programs shall maintain written evidence of the registration of apprenticeship programs and certification of trainee programs, the registration of the apprentices and trainees, and the ratios and wage rates prescribed in the applicable programs.

(ii) (A) The contractor shall submit weekly for each week in which any contract work is performed a copy of all payrolls to the Department of Homeland Security if the agency is a party to the contract, but if the agency is not such a party, the contractor will submit the payrolls to the applicant, sponsor, or owner, as the case may be, for transmission to the Department of Homeland Security. The payrolls submitted shall set out accurately and completely all of the information required to be maintained under 29 CFR 5.5(a)(3)(i), except that full social security numbers and home addresses shall not be included on weekly transmittals. Instead the payrolls shall only need to include an individually identifying number for each employee (e.g. the last four digits of the employee's social security number). The required weekly payroll information may be submitted in any form desired. Optional Form WH–347 is available for this purpose from the Wage and Hour Division Web site at http://www.dol.gov/esa/whd/forms/wh347instr.htm or its successor site. The prime contractor is responsible for the submission of copies of payrolls by all subcontractors. Contractors and subcontractors shall maintain the full social security number and current address of each covered worker, and shall provide them upon request to the Department of Homeland Security if the agency is a party to the contract, but if the agency is not such a party, the contractor will submit them to the applicant, sponsor, or owner, as the case may be, for transmission to the Department of Homeland Security, the contractor, or the Wage and Hour Division of the Department of Labor for purposes of an investigation or audit of compliance with prevailing wage requirements. It is not a violation of this section for a prime contractor to require a subcontractor to provide addresses and social security numbers to the prime contractor for its own records, without weekly submission to the sponsoring government agency (or the applicant, sponsor, or owner).

(B) Each payroll submitted shall be accompanied by a "Statement of Compliance," signed by the contractor or subcontractor or his or her agent who pays or supervises the payment of the persons employed under the contract and shall certify the following:

(1) That the payroll for the payroll period contains the information required to be provided under 29 CFR § 5.5(a)(3)(ii), the appropriate information is being maintained under 29 CFR § 5.5 (a)(3)(i) and that such information is correct and complete;

(2) That each laborer and mechanic (including each helper, apprentice and trainee) employed on the contract during the payroll period has been paid the full weekly wages earned, without rebate, either directly or indirectly, and that no deductions have been made either directly or indirectly from the full wages earned, other than permissible deductions as set forth in Regulations 29 CFR Part 3;

(3) That each laborer or mechanic has been paid not less than the applicable wage rates and fringe benefits or cash equivalents for the classification of work performed, as specified in the applicable wage determination incorporated into the contract.

(C) The weekly submission of a properly executed certification set forth on the reverse side of Optional Form WH-347 shall satisfy the requirement for submission of the "Statement of Compliance" required by paragraph (3)(ii)(B) of this section.

(D) The falsification of any of the above certifications may subject the contractor or subcontractor to civil or criminal prosecution under Section 1001 of Title 18 and Section 231 of Title 31 of the United States Code.

(iii) The contractor or subcontractor shall make the records required under paragraph (3)(i) of this section available for inspection, copying or transcription by authorized representatives of the County, the Department of Homeland Security, or the Department of Labor, and shall permit such representatives to interview employees during working hours on the job. If the contractor or subcontractor fails to submit the required records or to make them available, the Federal agency may, after written notice to the contractor, sponsor, applicant or owner, take such action as may be necessary to cause the suspension of any further payment, advance, or guarantee of funds. Furthermore, failure to submit the required records upon request or to make such records available may be grounds for debarment action pursuant to 29 CFR 5.12.

4. Apprentices and Trainees

(iv) Apprentices.

Apprentices will be permitted to work at less than the predetermined rate for the work they performed when they are employed pursuant to and individually registered in a bona fide apprenticeship program registered with the U.S. Department of Labor, Employment and Training Administration, Bureau of Apprenticeship and Training, or with a State Apprenticeship Agency recognized by the Bureau, or if a person is employed in his or her first 90 days of probationary employment as an apprentice in such an apprenticeship program, who is not individually registered in the program, but who has been certified by the Bureau of Apprenticeship and Training or a State Apprenticeship Agency (where appropriate) to be eligible for probationary employment as an apprentice. The allowable ratio of apprentices to journeymen on the job site in any craft classification shall not be greater than the ratio permitted to the contractor as to the entire work force under the registered program. Any worker listed on a payroll at an apprentice wage rate, who is not registered or otherwise employed as stated above, shall be paid not less than the applicable wage rate on the wage determination for the classification of work actually performed. In addition, any apprentice performing work on the job site in excess of the ratio permitted under the registered program shall be paid not less than the applicable wage rate on the wage determination for the work actually performed. Where a contractor is performing construction on a project in a locality other than that in which its program is registered, the ratios and wage rates (expressed in percentages of the journeyman's hourly rate) specified in the contractor's or subcontractor's registered program shall be observed. Every apprentice must be paid at not less than the rate specified in the registered program for the apprentice's level of progress, expressed

as a percentage of the journeymen hourly rate specified in the applicable wage determination. Apprentices shall be paid fringe benefits in accordance with the provisions of the apprenticeship program. If the apprenticeship program does not specify fringe benefits, apprentices must be paid the full amount of fringe benefits listed on the wage determination for the applicable classification. If the Administrator determines that a different practice prevails for the applicable apprentice classification, fringes shall be paid in accordance with that determination. In the event the Bureau of Apprenticeship and Training, or a State Apprenticeship Agency recognized by the Bureau, withdraws approval of an apprenticeship program, the contractor will no longer be permitted to utilize apprentices at less than the applicable predetermined rate for the work performed until an acceptable program is approved.

(v) Trainees. Except as provided in 29 CFR 5.16, trainees will not be permitted to work at less than the predetermined rate for the work performed unless they are employed pursuant to and individually registered in a program which has received prior approval, evidenced by formal certification by the U.S. Department of Labor, Employment and Training Administration. The ratio of trainees to journeymen on the job site shall not be greater than permitted under the plan approved by the Employment and Training Administration. Every trainee must be paid at not less than the rate specified in the approved program for the trainee's level of progress, expressed as a percentage of the journeyman hourly rate specified in the applicable wage determination. Trainees shall be paid fringe benefits in accordance with the provisions of the trainee program. If the trainee program does not mention fringe benefits, trainees shall be paid the full amount of fringe benefits listed on the wage determination unless the Administrator of the Wage and Hour Division determines that there is an apprenticeship program associated with the corresponding journeyman wage rate on the wage determination which provides for less than full fringe benefits for apprentices. Any employee listed on the payroll at a trainee rate that is not registered and participating in a training plan approved by the Employment and Training Administration shall be paid not less than the applicable wage rate on the wage determination for the classification of work actually performed. In addition, any trainee performing work on the job site in excess of the ratio permitted under the registered program shall be paid not less than the applicable wage rate on the wage determination for the work actually performed.

In the event the Employment and Training Administration withdraws approval of a training program, the contractor will no longer be permitted to utilize trainees at less than the applicable predetermined rate for the work performed until an acceptable program is approved.

(vi) Equal Employment Opportunity. The utilization of apprentices, trainees and journeymen under this part shall be in conformity with the equal employment opportunity requirements of Executive Order 11246, as amended, and 29 CFR Part 30.

5. Compliance with Copeland Act Requirements

The contractor shall comply with the requirements of 29 CFR Part 3, which are incorporated by reference in this contract.

6. Subcontracts

The contractor or subcontractor shall insert in any subcontracts the clauses contained in 29 CFR Part 5.5(a)(1) through (10) and such other clauses as the Department of Homeland Security may by appropriate instructions require, and also a clause requiring the subcontractors to include these clauses in any lower tier subcontracts. The prime contractor shall be responsible for the compliance by any subcontractor or lower tier subcontractor with all the contract clauses in 29 CFR Part 5.5.

7. Contract Termination: Debarment

A breach of the contract clauses in paragraph 1 through 10 of this section may be grounds for termination of the contract, and for debarment as a contractor and a subcontractor as provided in 29 CFR 5.12.

8. Compliance with Davis-Bacon and Related Act Requirements

All rulings and interpretations of the Davis-Bacon and Related Acts contained in 29 CFR Parts 1, 3, and 5 are herein incorporated by reference in this contract.

9. Disputes Concerning Labor Standards

Disputes arising out of the labor standards provisions of this contract shall not be subject to the general disputes clause of this contract. Such disputes shall be resolved in accordance with the procedures of the Department of Labor set forth in 29 CFR Parts 5, 6 and 7. Disputes within the meaning of this clause include disputes between the contractor (or any of its subcontractors) and the contracting agency, the U.S. Department of Labor, or the employees or their representatives.

10. Certification of Eligibility

(vii) By entering into this contract, the contractor certifies that neither it (nor he or she) nor any person or firm who has an interest in the contractor's firm is a person or firm ineligible to be awarded Government contracts by virtue of section 3(a) of the Davis-Bacon Act or 29 CFR 5.12(a)(1).

(viii) No part of this contract shall be subcontracted to any person or firm ineligible for award of a Government contract by virtue of section 3(a) of the Davis-Bacon Act or 29 CFR 5.12(a)(1).

(ix) The penalty for making false statements is prescribed in the U.S. Criminal Code, 18 U.S.C. 100

27. Texting When Driving

In accordance with Executive Order 13513, "Federal Leadership on Reducing Text Messaging While Driving" (10/1/2009) and DOT Order 3902.10 “Text Messaging While Driving” (12/30/2009), the Contractor must promote policies and initiatives for employees and other work personnel that decrease crashes by distracted drivers, including policies to ban text messaging while driving. The Contractor must include these policies in each third party subcontract involved on this project.

28. Equal Opportunity Clause

During the performance of this contract, the contractor agrees as follows:

(1) The contractor will not discriminate against any employee or applicant for employment because of race, color, religion, sex, or national origin. The contractor will take affirmative action to ensure that applicants are employed, and that employees are treated during employment without regard to their race, color, religion, sex, or national origin such action shall include, but not be limited to the following: Employment, upgrading, demotion, or transfer; recruitment or recruitment advertising; layoff or termination; rates of pay or other forms of compensation; and selection for training, including apprenticeship. The contractor agrees to post in conspicuous places, available to employees and applicants for employment, notices to be provided setting forth the provisions of this nondiscrimination clause.

(2) The contractor will, in all solicitations or advertisements for employees placed by or on behalf of the contractor, state that all qualified applicants will receive considerations for employment without regard to race, color, religion, sex, or national origin.

(3) The contractor will send to each labor union or representative of workers with which he has a collective bargaining agreement or other contract or understanding, a notice to be provided advising the said labor union or workers' representatives of the contractor's commitments under this section, and shall post copies of the notice in conspicuous places available to employees and applicants for employment.

(4) The contractor will comply with all provisions of Executive Order 11246 of September 24, 1965, and of the rules, regulations, and relevant orders of the Secretary of Labor.

(5) The contractor will furnish all information and reports required by Executive Order 11246 of September 24, 1965, and by rules, regulations, and orders of the Secretary of Labor, or pursuant thereto, and will permit access to his books, records, and accounts by the administering agency and the Secretary of Labor for purposes of investigation to ascertain compliance with such rules, regulations, and orders.

(6) In the event of the contractor's noncompliance with the nondiscrimination clauses of this contract or with any of the said rules, regulations, or orders, this contract may be canceled, terminated, or suspended in whole or in part and the contractor may be declared ineligible for further Government contracts or federally assisted construction contracts in accordance with procedures authorized in Executive Order 11246 of September 24, 1965, and such other sanctions may be imposed and remedies invoked as provided in Executive Order 11246 of September 24, 1965, or by rule, regulation, or order of the Secretary of Labor, or as otherwise provided by law.

(7) The contractor will include the portion of the sentence immediately preceding paragraph (1) and the provisions of paragraphs (1) through (7) in every subcontract or purchase order unless exempted by rules, regulations, or orders of the Secretary of Labor issued pursuant to section 204 of Executive Order 11246 of September 24, 1965, so that such provisions will be binding upon each subcontractor or vendor. The contractor will take such action with respect to any subcontract or purchase order as the administering agency may direct as a means of enforcing such provisions, including sanctions for noncompliance: Provided, however, That in the event a contractor becomes involved in, or is threatened with, litigation with a subcontractor or vendor as a result of such direction by the administering agency the contractor may request the United States to enter into such litigation to protect the interests of the United States.

STANDARD FEDERAL EQUAL EMPLOYMENT OPPORTUNITY
CONSTRUCTION CONTRACT SPECIFICATIONS

1. As used in these specifications:

a. "Covered area" means the geographical area described in the solicitation from which this contract resulted;

b. "Director" means Director, Office of Federal Contract Compliance Programs (OFCCP), U.S. Department of Labor, or any person to whom the Director delegates authority;

c. "Employer identification number" means the Federal social security number used on the Employer's Quarterly Federal Tax Return, U.S. Treasury Department Form 941;

d. "Minority" includes:

(1) Black (all) persons having origins in any of the Black African racial groups not of Hispanic origin);

(2) Hispanic (all persons of Mexican, Puerto Rican, Cuban, Central or South American, or other Spanish culture or origin regardless of race);

(3) Asian and Pacific Islander (all persons having origins in any of the original peoples of the Far East, Southeast Asia, the Indian Subcontinent, or the Pacific Islands); and

(4) American Indian or Alaskan native (all persons having origins in any of the original peoples of North America and maintaining identifiable tribal affiliations through membership and participation or community identification).

2. Whenever the contractor, or any subcontractor at any tier, subcontracts a portion of the work involving any construction trade, it shall physically include in each subcontract in excess of $10,000 the provisions of these specifications and the Notice which contains the applicable goals for minority and female participation and which is set forth in the solicitations from which this contract resulted.

3. If the contractor is participating (pursuant to 41 CFR 60-4.5) in a Hometown Plan approved by the U.S. Department of Labor in the covered area either individually or through an association, its affirmative action obligations on all work in the Plan area (including goals and timetables) shall be in accordance with that Plan for those trades which have unions participating in the Plan. Contractors shall be able to demonstrate their participation in and compliance with the provisions of any such Hometown Plan. Each contractor or subcontractor participating in an approved plan is

individually required to comply with its obligations under the EEO clause and to make a good faith effort to achieve each goal under the Plan in each trade in which it has employees. The overall good faith performance by other contractors or subcontractors toward a goal in an approved Plan does not excuse any covered contractor's or subcontractor's failure to take good faith efforts to achieve the Plan goals and timetables.

4. The contractor shall implement the specific affirmative action standards provided in Section 27: Equal Opportunity Clause (above) of these specifications. The goals set forth in the solicitation from which this contract resulted are expressed as percentages of the total hours of employment and training of minority and female utilization the contractor should reasonably be able to achieve in each construction trade in which it has employees in the covered area. Covered construction contractors performing construction work in a geographical area where they do not have a Federal or federally assisted construction contract shall apply the minority and female goals established for the geographical area where the work is being performed. Goals are published periodically in the Federal Register in notice form, and such notices may be obtained from any Office of Federal Contract Compliance Programs office or from Federal procurement contracting officers. The contractor is expected to make substantially uniform progress in meeting its goals in each craft. during the period specified.

6. Neither the provisions of any collective bargaining agreement nor the failure by a union with whom the contractor has a collective bargaining agreement to refer either minorities or women shall excuse the contractor's obligations under these specifications, Executive Order 11246 or the regulations promulgated pursuant thereto.

7. In order for the non-working training hours of apprentices and trainees to be counted in meeting the goals, such apprentices and trainees shall be employed by the contractor during the training period and the contractor shall have made a commitment to employ the apprentices and trainees at the completion of their training, subject to the availability of employment opportunities. Trainees shall be trained pursuant to training programs approved by the U.S. Department of Labor.

8. The contractor shall take specific affirmative actions to ensure equal employment opportunity. The evaluation of the contractor's compliance with these specifications shall be based upon its effort to achieve maximum results from its actions. The contractor shall document these efforts fully and shall implement affirmative action steps at least as extensive as the following:

    a. Ensure and maintain a working environment free of harassment, intimidation, and coercion at all sites, and in all facilities at which the contractor's employees are assigned to work. The contractor, where possible, will assign two or more women to each construction project. The contractor shall specifically ensure that all foremen, superintendents, and other onsite supervisory personnel are aware of and carry out the contractor's obligation to maintain such a working environment, with specific attention to minority or female individuals working at such sites or in such facilities.

    b. Establish and maintain a current list of minority and female recruitment sources, provide written notification to minority and female recruitment sources and to community organizations when the contractor or its unions have employment opportunities available, and maintain a record of the organizations' responses.

    c. Maintain a current file of the names, addresses, and telephone numbers of each minority and female off-the-street applicant and minority or female referral from a union, a recruitment source, or community organization and of what action was taken with respect to each such individual. If such individual was sent to the union hiring hall for referral and was not referred back to the contractor by the union or, if referred, not employed by the contractor, this shall be documented in the file with the reason therefore along with whatever additional actions the contractor may have taken.

    d. Provide immediate written notification to the Director when the union or unions with which the contractor has a collective bargaining agreement has not referred to the contractor a minority person or female sent by the contractor, or when the contractor has other information that the union referral process has impeded the contractor's efforts to meet its obligations.

e. Develop on-the-job training opportunities and/or participate in training programs for the area which expressly include minorities and women, including upgrading programs and apprenticeship and trainee programs relevant to the contractor's employment needs, especially those programs funded or approved by the Department of Labor. The contractor shall provide notice of these programs to the sources compiled under 8b above.

f. Disseminate the contractor's EEO policy by providing notice of the policy to unions and training programs and requesting their cooperation in assisting the contractor in meeting its EEO obligations; by including it in any policy manual and collective bargaining agreement; by publicizing it in the company newspaper, annual report, etc.; by specific review of the policy with all management personnel and with all minority and female employees at least once a year; and by posting the company EEO policy on bulletin boards accessible to all employees at each location where construction work is performed.

g. Disseminate the contractor's EEO policy externally by including it in any advertising in the news media, specifically including minority and female news media, and providing written notification to and discussing the contractor's EEO policy with other contractors and subcontractors with whom the contractor does or anticipates doing business.

h. Direct its recruitment efforts, both oral and written, to minority, female, and community organizations, to schools with minority and female students; and to minority and female recruitment and training organizations serving the contractor's recruitment area and employment needs. Not later than one month prior to the date for the acceptance of applications for apprenticeship or other training by any recruitment source, the contractor shall send written notification to organizations, such as the above, describing the openings, screening procedures, and tests to be used in the selection process.

i. Encourage present minority and female employees to recruit other minority persons and women and, where reasonable provide after school, summer, and vacation employment to minority and female youth both on the site and in other areas of a contractor's workforce.

j. Validate all tests and other selection requirements where there is an obligation to do so under 41 CFR Part 60-3.

k. Conduct, at least annually, an inventory and evaluation at least of all minority and female personnel, for promotional opportunities and encourage these employees to seek or to prepare for, through appropriate training, etc., such opportunities.

l. Ensure that seniority practices, job classifications, work assignments, and other personnel practices do not have a discriminatory effect by continually monitoring all personnel and employment related activities to ensure that the EEO policy and the contractor's obligations under these specifications are being carried out.

m. Ensure that all facilities and company activities are non-segregated except that separate or single user toilet and necessary changing facilities shall be provided to assure privacy between the sexes.

n. Document and maintain a record of all solicitations of offers for subcontracts from minority and female construction contractors and suppliers, including circulation of solicitations to minority and female contractor associations and other business associations.

o. Conduct a review, at least annually, of all supervisor's adherence to and performance under the contractor's EEO policies and affirmative action obligations.

9. Contractors are encouraged to participate in voluntary associations, which assist in fulfilling one or more of their affirmative action obligations (18.7a through 18.7p). The efforts of a contractor association, joint contractor union, contractor community, or other similar groups of which the contractor is a member and participant, may be asserted as fulfilling any one or more of its obligations under Section 27: Equal Opportunity Clause of these specifications provided that the contractor actively participates in the group, makes every effort to assure that the group has a positive impact on the employment of minorities and women in the industry, ensures that the concrete benefits of the program are reflected in the contractor's minority and female workforce participation, makes a good

faith effort to meet its individual goals and timetables, and can provide access to documentation which demonstrates the effectiveness of actions taken on behalf of the contractor. The obligation to comply, however, is the contractor's and failure of such a group to fulfill an obligation shall not be a defense for the contractor's noncompliance.

10. A single goal for minorities and a separate single goal for women have been established. The contractor, however, is required to provide equal employment opportunity and to take affirmative action for all minority groups, both male and female, and all women, both minority and non-minority. Consequently, if the particular group is employed in a substantially disparate manner (for example, even though the contractor has achieved its goals for women generally,) the contractor may be in violation of the Executive Order if a specific minority group of women is underutilized.

11. The contractor shall not use the goals and timetables or affirmative action standards to discriminate against any person because of race, color, religion, sex, or national origin.

11. The contractor shall not enter into any subcontract with any person or firm debarred from Government contracts pursuant to Executive Order 11246.

12. The contractor shall carry out such sanctions and penalties for violation of these specifications and of the Equal Opportunity Clause, including suspension, termination, and cancellation of existing subcontracts as may be imposed or ordered pursuant to Executive Order 11246, as amended, and its implementing regulations, by the Office of Federal Contract Compliance Programs. Any contractor who fails to carry out such sanctions and penalties shall be in violation of these specifications and Executive Order 11246, as amended.

13. The contractor, in fulfilling its obligations under these specifications, shall implement specific affirmative action steps, at least as extensive as those standards prescribed in Section 27: Equal Opportunity Clause of these specifications, so as to achieve maximum results from its efforts to ensure equal employment opportunity. If the contractor fails to comply with the requirements of the Executive Order, the implementing regulations, or these specifications, the Director shall proceed in accordance with 41 CFR 60-4.8.

14. The contractor shall designate a responsible official to monitor all employment related activity to ensure that the company EEO policy is being carried out, to submit reports relating to the provisions hereof as may be required by the Government, and to keep records. Records shall at least include for each employee, the name, address, telephone number, construction trade, union affiliation if any, employee identification number when assigned, social security number, race, sex, status (e.g., mechanic, apprentice, trainee, helper, or laborer), dates of changes in status, hours worked per week in the indicated trade, rate of pay, and locations at which the work was performed. Records shall be maintained in an easily understandable and retrievable form; however, to the degree that existing records satisfy this requirement, contractors shall not be required to maintain separate records.

15. Nothing herein provided shall be construed as a limitation upon the application of other laws which establish different standards of compliance or upon the application of requirements for the hiring of local or other area residents (e.g., those under the Public Works Employment Act of 1977 and the Community Development Block Grant Program).

29. Notice of Non-Segregated Facilities Requirement

Notice to Prospective Federally Assisted Construction Contractors:

1. A Certification of Non-segregated Facilities shall be submitted prior to the award of a federally-assisted construction contract exceeding $10,000 which is not exempt from the provisions of the Equal Opportunity Clause.

2. Contractors receiving federally-assisted construction contract awards exceeding $10,000 which are not exempt from the provisions of the Equal Opportunity Clause will be required to provide for the forwarding of the following notice to prospective

subcontractors for supplies and construction contracts where the subcontracts exceed $10,000 and are not exempt from the provisions of the Equal Opportunity Clause.

3. The penalty for making false statements in offers is prescribed in 18 U.S.C. § 1001.

Notice to Prospective Subcontractors of Requirements for Certification of Non-Segregated Facilities:

1. A Certification of Non-segregated Facilities shall be submitted prior to the award of a subcontract exceeding $10,000, which is not exempt from the provisions of the Equal Opportunity Clause.
2. Contractors receiving subcontract awards exceeding $10,000 which are not exempt from the provisions of the Equal Opportunity Clause will be required to provide for the forwarding of this notice to prospective subcontractors for supplies and construction contracts where the subcontracts exceed $10,000 and are not exempt from the provisions of the Equal Opportunity Clause.
3. The penalty for making false statements in offers is prescribed in 18 U.S.C. § 1001.

CERTIFICATION OF NONSEGREGATED FACILITIES

The federally-assisted construction contractor certifies that she or he does not maintain or provide, for his employees, any segregated facilities at any of his establishments and that she or he does not permit his employees to perform their services at any location, under his control, where segregated facilities are maintained. The federally-assisted construction contractor certifies that she or he will not maintain or provide, for his employees, segregated facilities at any of his establishments and that she or he will not permit his employees to perform their services at any location under his control where segregated facilities are maintained. The federally-assisted construction contractor agrees that a breach of this certification is a violation of the Equal Opportunity Clause in this contract.

As used in this certification, the term "segregated facilities" means any waiting rooms, work areas, restrooms, and washrooms, restaurants and other eating areas, time clocks, locker rooms and other storage or dressing areas, parking lots, drinking fountains, recreation or entertainment areas, transportation, and housing facilities provided for employees which are segregated by explicit directives or are, in fact, segregated on the basis of race, color, religion, or national origin because of habit, local custom, or any other reason. The federally- assisted construction contractor agrees that (except where she or he has obtained identical certifications from proposed subcontractors for specific time periods) she or he will obtain identical certifications from proposed subcontractors prior to the award of subcontracts exceeding $10,000 which are not exempt from the provisions of the Equal Opportunity Clause and that she or he will retain such certifications in his files.

30. Termination of Contract

a. The Sponsor may, by written notice, terminate this contract in whole or in part at any time, either for the Sponsor's convenience or because of failure to fulfill the contract obligations. Upon receipt of such notice services must be immediately discontinued (unless the notice directs otherwise) and all materials as may have been accumulated in performing this contract, whether completed or in progress, delivered to the Sponsor.

b. If the termination is for the convenience of the Sponsor, an equitable adjustment in the contract price will be made, but no amount will be allowed for anticipated profit on unperformed services.

c. If the termination is due to failure to fulfill the contractor's obligations, the Sponsor may take over the work and prosecute the same to completion by contract or otherwise. In such case, the contractor is liable to the Sponsor for any additional cost occasioned to the Sponsor thereby.

d. If, after notice of termination for failure to fulfill contract obligations, it is determined that the contractor had not so failed, the termination will be deemed to have been effected for the convenience of the Sponsor. In such event, adjustment in the contract price will be made as provided in paragraph 2 of this clause.

e. The rights and remedies of the sponsor provided in this clause are in addition to any other rights and remedies provided by law or under this contract.

31. Certificate Regarding Debarment and Suspension

By submitting a bid/proposal under this solicitation, the bidder or offeror certifies that at the time the bidder or offeror submits its proposal that neither it nor its principals are presently debarred or suspended by any Federal department or agency from participation in this transaction.

32. Breach of Contract

Any violation or breach of terms of this contract on the part of the contractor or its subcontractors may result in the suspension or termination of this contract or such other action that may be necessary to enforce the rights of the parties and remedies available thereunder are in addition to,and not a limitation of, any duties, obligations, rights and remedies otherwise imposed or available by laws of this agreement. The duties and obligations imposed by the Contract Documents and the rights and remedies available thereunder are in addition to, and not a limitation of, any duties, obligations, rights and remedies otherwise imposed or available by law.

33. Clean Air and Water Pollution Control

Contractors and subcontractors agree:

1. That any facility to be used in the performance of the contract or subcontract or to benefit from the contract is not listed on the Environmental Protection Agency (EPA) List of Violating Facilities;
2. To comply with all the requirements of Section 114 of the Clean Air Act, as amended, 42 U.S.C. 1857 et seq. and Section 308 of the Federal Water Pollution Control Act, as amended, 33 U.S.C. 1251 et seq. relating to inspection, monitoring, entry, reports, and information, as well as all other requirements specified in Section 114 and Section 308 of the Acts, respectively, and all other regulations and guidelines issued thereunder;
3. That, as a condition for the award of this contract, the contractor or subcontractor will notify the awarding official of the receipt of any communication from the EPA indicating that a facility to be used for the performance of or benefit from the contract is under consideration to be listed on the EPA List of Violating Facilities;
4. To include or cause to be included in any construction contract or subcontract which exceeds $100,000 the aforementioned criteria and requirements.

34. Contract Workhours and Safety Standards Act Requirements

1. Overtime Requirements.

No contractor or subcontractor contracting for any part of the contract work which may require or involve the employment of laborers or mechanics shall require or permit any such laborer or mechanic, Including watchmen and guards, in any workweek in which he or she is employed on such work to work in excess of forty hours in such workweek unless such laborer or mechanic receives compensation at a rate not less than one and one-half times the basic rate of pay for all hours worked in excess of forty hours in such workweek.

2. Violation; Liability for Unpaid Wages, Liquidated Damages

In the event of any violation of the clause set forth in paragraph (1) above, the contractor and any subcontractor responsible therefor shall be liable for the unpaid wages. In addition, such contractor and subcontractor shall be liable to the United States (in the case of work done under contract for the District of Columbia or a territory, to such District or to such territory), for liquidated damages. Such liquidated damages shall be computed with respect to each individual laborer or mechanic, including watchmen and

guards, employed in violation of the clause set forth in paragraph 1 above, in the sum of $10 for each calendar day on which such individual was required or permitted to work in excess of the standard workweek of forty hours without payment of the overtime wages required by the clause set forth in paragraph 1 above.

3. Witholding for Unpaid Wages and Liquidated Damages

The Department of Homeland Security or the County shall upon its own action or upon written request of an authorized representative of the Department of Labor withhold or cause to be withheld, from any monies payable on account of work performed by the contractor or subcontractor under any such contract or any other Federal contract with the same prime contractor, or any other Federally-assisted contract subject to the Contract Work Hours and Safety Standards Act, which is held by the same prime contractor, such sums as may be determined to be necessary to satisfy any liabilities of such contractor or subcontractor for unpaid wages and liquidated damages as provided in the clause set forth in paragraph 2 above.

4. Subcontractors.

The contractor or subcontractor shall insert in any subcontracts the clauses set forth in paragraphs 1 through 4 and also a clause requiring the subcontractor to include these clauses in any lower tier subcontracts. The prime contractor shall be responsible for compliance by any subcontractor or lower tier subcontractor with the clauses set forth in paragraphs 1 through 4 of this section.

Davis-Bacon Wage Determinations:

General Decision Number: TX170306 06/02/2017 TX306

Superseded General Decision Number: TX20160306

State: Texas

Construction Type: Building

County: Jefferson County in Texas.

BUILDING CONSTRUCTION PROJECTS (does not include single family homes or apartments up to and including 4 stories).

Note: Under Executive Order (EO) 13658, an hourly minimum wage of $10.20 for calendar year 2017 applies to all contracts subject to the Davis-Bacon Act for which the contract is awarded (and any solicitation was issued) on or after January 1, 2015. If this contract is covered by the EO, the contractor must pay all workers in any classification listed on this wage determination at least $10.20 (or the applicable wage rate listed on this wage determination, if it is higher) for all hours spent performing on the contract in calendar year 2017. The EO minimum wage rate will be adjusted annually. Additional information on contractor requirements and worker protections under the EO is available at www.dol.gov/whd/govcontracts.

Modification Number	Publication Date
0	01/06/2017
1	04/14/2017
2	05/19/2017
3	06/02/2017

ASBE0022-009 12/01/2016

	Rates	Fringes
ASBESTOS WORKER/HEAT & FROST INSULATOR (Duct, Pipe and Mechanical System Insulation)	$ 23.42	12.26

BOIL0074-003 01/01/2017

	Rates	Fringes
BOILERMAKER	$ 28.00	22.35

* BRTX0005-006 06/01/2017

	Rates	Fringes
BRICKLAYER	$ 23.02	9.53

ELEC0479-005 09/26/2016

	Rates	Fringes

ELECTRICIAN.....$ 28.50 12.30

ENGI0450-002 04/01/2014

	Rates	Fringes
POWER EQUIPMENT OPERATOR Cranes	$ 34.85	9.85

IRON0084-011 06/01/2015

	Rates	Fringes
IRONWORKER, ORNAMENTAL	$ 23.02	6.35

IRON0135-002 12/01/2014

	Rates	Fringes
IRONWORKER, STRUCTURAL	$ 28.25	9.25

PLUM0068-001 10/01/2016

	Rates	Fringes
PLUMBER	$ 29.74	9.74

PLUM0211-009 10/01/2015

	Rates	Fringes
PIPEFITTER	$ 33.13	10.31

SHEE0054-007 07/01/2014

	Rates	Fringes
SHEET METAL WORKER (Excludes HVAC Duct Installation)	$ 25.67	12.39

SUTX2014-032 07/21/2014

	Rates	Fringes
CARPENTER	$ 17.98	3.72
CEMENT MASON/CONCRETE FINISHER	$ 13.44	0.00
FORM WORKER	$ 13.02	0.00
IRONWORKER, REINFORCING	$ 12.95	0.00
LABORER: Common or General	$ 12.04	0.00
LABORER: Mason Tender - Brick	$ 12.90	0.00
LABORER: Mason Tender - Cement/Concrete	$ 10.50	0.00
LABORER: Pipelayer	$ 13.47	0.00

LABORER: Roof Tearoff	$ 11.28	0.00
LABORER: Landscape and Irrigation	$ 11.04	0.36
OPERATOR: Backhoe/Excavator/Trackhoe	$ 18.65	0.00
OPERATOR: Bobcat/Skid Steer/Skid Loader	$ 13.93	0.00
OPERATOR: Bulldozer	$ 18.88	0.00
OPERATOR: Drill	$ 16.22	0.34
OPERATOR: Forklift	$ 17.69	0.00
OPERATOR: Grader/Blade	$ 13.37	0.00
OPERATOR: Loader	$ 13.55	0.94
OPERATOR: Mechanic	$ 17.52	3.33
OPERATOR: Paver (Asphalt, Aggregate, and Concrete)	$ 16.03	0.00
OPERATOR: Roller	$ 16.00	0.00
PAINTER (Brush, Roller, and Spray)	$ 16.75	4.51
ROOFER	$ 15.40	0.00
SHEET METAL WORKER (HVAC Duct Installation Only)	$ 26.89	10.38
TILE FINISHER	$ 12.00	0.00
TILE SETTER	$ 16.17	0.00
TRUCK DRIVER: Dump Truck	$ 12.39	1.18
TRUCK DRIVER: Flatbed Truck	$ 19.65	8.57
TRUCK DRIVER: Semi-Trailer Truck	$ 12.50	0.00
TRUCK DRIVER: Water Truck	$ 12.00	4.11

WELDERS - Receive rate prescribed for craft performing operation to which welding is incidental.

==========

Note: Executive Order (EO) 13706, Establishing Paid Sick Leave for Federal Contractors applies to all contracts subject to the Davis-Bacon Act for which the contract is awarded (and any solicitation was issued) on or after January 1, 2017. If this contract is covered by the EO, the contractor must provide employees with 1 hour of paid sick leave for every 30 hours

they work, up to 56 hours of paid sick leave each year. Employees must be permitted to use paid sick leave for their own illness, injury or other health-related needs, including preventive care; to assist a family member (or person who is like family to the employee) who is ill, injured, or has other health-related needs, including preventive care; or for reasons resulting from, or to assist a family member (or person who is like family to the employee) who is a victim of, domestic violence, sexual assault, or stalking. Additional information on contractor requirements and worker protections under the EO is available at www.dol.gov/whd/govcontracts.

Unlisted classifications needed for work not included within the scope of the classifications listed may be added after award only as provided in the labor standards contract clauses (29CFR 5.5 (a) (1) (ii)).

The body of each wage determination lists the classification and wage rates that have been found to be prevailing for the cited type(s) of construction in the area covered by the wage determination. The classifications are listed in alphabetical order of "identifiers" that indicate whether the particular rate is a union rate (current union negotiated rate for local), a survey rate (weighted average rate) or a union average rate (weighted union average rate).

Union Rate Identifiers

A four letter classification abbreviation identifier enclosed in dotted lines beginning with characters other than "SU" or "UAVG" denotes that the union classification and rate were prevailing for that classification in the survey. Example: PLUM0198-005 07/01/2014. PLUM is an abbreviation identifier of the union which prevailed in the survey for this classification, which in this example would be Plumbers. 0198 indicates the local union number or district council number where applicable, i.e., Plumbers Local 0198. The next number, 005 in the example, is an internal number used in processing the wage determination. 07/01/2014 is the effective date of the most current negotiated rate, which in this example is July 1, 2014.

Union prevailing wage rates are updated to reflect all rate changes in the collective bargaining agreement (CBA) governing this classification and rate.

Survey Rate Identifiers

Classifications listed under the "SU" identifier indicate that no one rate prevailed for this classification in the survey and the published rate is derived by computing a weighted average rate based on all the rates reported in the survey for that classification. As this weighted average rate includes all rates reported in the survey, it may include both union and non-union rates. Example: SULA2012-007 5/13/2014. SU indicates the rates are survey rates based on a weighted average calculation of rates and are not majority rates. LA indicates

the State of Louisiana. 2012 is the year of survey on which these classifications and rates are based. The next number, 007 in the example, is an internal number used in producing the wage determination. 5/13/2014 indicates the survey completion date for the classifications and rates under that identifier.

Survey wage rates are not updated and remain in effect until a new survey is conducted.

Union Average Rate Identifiers

Classification(s) listed under the UAVG identifier indicate that no single majority rate prevailed for those classifications; however, 100% of the data reported for the classifications was union data. EXAMPLE: UAVG-OH-0010 08/29/2014. UAVG indicates that the rate is a weighted union average rate. OH indicates the state. The next number, 0010 in the example, is an internal number used in producing the wage determination. 08/29/2014 indicates the survey completion date for the classifications and rates under that identifier.

A UAVG rate will be updated once a year, usually in January of each year, to reflect a weighted average of the current negotiated/CBA rate of the union locals from which the rate is based.

WAGE DETERMINATION APPEALS PROCESS

1.) Has there been an initial decision in the matter? This can be:

* an existing published wage determination
* a survey underlying a wage determination
* a Wage and Hour Division letter setting forth a position on a wage determination matter
* a conformance (additional classification and rate) ruling

On survey related matters, initial contact, including requests for summaries of surveys, should be with the Wage and Hour Regional Office for the area in which the survey was conducted because those Regional Offices have responsibility for the Davis-Bacon survey program. If the response from this initial contact is not satisfactory, then the process described in 2.) and 3.) should be followed.

With regard to any other matter not yet ripe for the formal process described here, initial contact should be with the Branch of Construction Wage Determinations. Write to:

Branch of Construction Wage Determinations
Wage and Hour Division
U.S. Department of Labor
200 Constitution Avenue, N.W.
Washington, DC 20210

2.) If the answer to the question in 1.) is yes, then an interested party (those affected by the action) can request

review and reconsideration from the Wage and Hour Administrator (See 29 CFR Part 1.8 and 29 CFR Part 7). Write to:

Wage and Hour Administrator
U.S. Department of Labor
200 Constitution Avenue, N.W.
Washington, DC 20210

The request should be accompanied by a full statement of the interested party's position and by any information (wage payment data, project description, area practice material, etc.) that the requestor considers relevant to the issue.

3.) If the decision of the Administrator is not favorable, an interested party may appeal directly to the Administrative Review Board (formerly the Wage Appeals Board). Write to:

Administrative Review Board
U.S. Department of Labor
200 Constitution Avenue, N.W.
Washington, DC 20210

4.) All decisions by the Administrative Review Board are final.

==========

END OF GENERAL DECISION

Bidder Information Form

Instructions: Complete the form below. Please provide legible, accurate, and complete contact information. PLEASE PRINT.

Bid Name & Number: IFB 17-029/JW, Re-bid Jefferson County Sheriff's Office Hangar Building at Jack Brooks Regional Airport

Bidder's Company/Business Name: _____

Bidder's TAX ID Number: _____

Contact Person: _____ **Title:** _____

Phone Number (with area code): _____

Alternate Phone Number if available (with area code):_____

Fax Number (with area code):_____

Email Address: _____

Mailing Address (Please provide a physical address for bid bond return, if applicable):

_____
Address

_____
City, State, Zip Code

Bidder Shall Return Completed Form with Offer.

OFFER AND ACCEPTANCE FORM

OFFER TO CONTRACT

To Jefferson County:

We hereby offer and agree to furnish the materials or service in compliance with all terms, conditions, specifications, and amendments in the Invitation for Bid and any written exceptions in the offer. We understand that the items in this Invitation for Bid, including, but not limited to, all required certificates are fully incorporated herein as a material and necessary part of the contract.

The undersigned hereby states, under penalty of perjury, that all information provided is true, accurate, and complete, and states that he/she has the authority to submit this bid, which will result in a binding contract if accepted by Jefferson County.

We acknowledge receipt of the following amendment(s): _____, _____, _____, _____.

I certify, under penalty of perjury, that I have the legal authorization to bind the firm hereunder:

_____
Company Name

_____
Address

_____
City State Zip

_____
Signature of Person Authorized to Sign

_____
Printed Name

_____
Title

For clarification of this offer, contact:

_____
Name

_____
Phone Fax

_____
E-mail

Bidder Shall Return Completed Form with Offer.

Bid Form

Bidder proposes to furnish all labor, material and equipment, and to perform all work necessary to construct a **Hangar Building for the Jefferson County Sheriff's Office (located at the Jack Brooks Regional Airport)**, in accordance with drawings and specifications prepared by LJA Engineering, for the following sum:

Materials Bid Amount: $_____._____

Materials Bid Amount Written in Words:

_____dollars and _____ /100

Labor Bid Amount: $_____._____

Labor Bid Amount Written in Words:

_____dollars and _____ /100

Total Base Bid Amount: $_____._____

Total Base Bid Amount Written in Words:

_____dollars and _____ /100

Bid Alternate 1 – Bid Amount: $_____._____
Optional Concrete Drive

Bid Alternate 1 for Optional Concrete Drive - Bid Amount Written in Words:

_____dollars and _____ /100

Bidder has examined the site of the Work and the nature and kind of work to be performed and is informed of all local conditions and other things that might affect the cost or difficulty of performing the Work, and Bidder represents and warrants that Bidder has experience in the use of materials and methods of performance specified, and that Bidder and will do the Work and construct the improvements with the specified materials as contemplated and indicated by the Drawings and Specifications.

Upon receipt of notice of acceptance of bid, Bidder agrees to execute the Contract within 10 (ten) days after such notice, deliver Performance and Payment Bonds for the faithful performance of the Work, to begin work on or before the date of commencement of the Work established in the Notice to Proceed, and to complete the Work in **150** calendar days.

Bidder hereby agrees to commence work under this contract on or before a date to be specified in a written "Notice to Proceed" of the Owner and to fully complete the project on or before the date of completion shown on the "Notice to Proceed". Bidder further agrees to pay as liquidated damages, the sum of **$500.00** for each consecutive calendar day thereafter.

Acknowledgment of Addenda (if any):

Addendum 1 _____ Date Received_____

Addendum 2 _____ Date Received_____

Addendum 3 _____ Date Received_____

Bidder Shall Return Completed Form with Offer.

Signature Page

As permitted under Article 4413 (32c) V.A.C.S., other governmental entities may wish to participate under the same terms and conditions contained in this contract (i.e., piggyback). In the event any other entity participates, all purchase orders will be issued directly from and shipped directly to the entity requiring supplies/services. Jefferson County shall not be held responsible for any orders placed, deliveries made or payment for supplies/services ordered by another entity. Each entity reserves the right to determine their participation in this contract.

Would bidder be willing to allow other governmental entities to piggyback off this contract, if awarded, under the same terms and conditions?..... **Yes** ☐ **No** ☐

This bid shall remain in effect for ninety (90) days from bid opening and shall be exclusive of federal excise and state and local sales tax (exempt).

The undersigned agrees, if this bid is accepted, to furnish any and all items upon which prices are offered, at the price and upon the terms and conditions contained in the Invitation for Bid, Conditions of Bidding, Terms of Contract, and Specifications and all other items made a part of the accepted contract.

The undersigned affirms that they are duly authorized to execute the contract, that this company, corporation, firm, partnership or individual has not prepared this bid in collusion with any other bidder, and that the contents of this bid as to prices, terms or conditions of said bid have not been communicated by the undersigned nor by any employee or agent to any other bidder or to any other person(s) engaged in this type of business prior to the official opening of this bid. And further, that neither the bidder nor their employees nor agents have been for the past six (6) months directly nor indirectly concerned in any pool or agreement or combination to control the price of goods or services on, nor to influence any person to bid or not to bid thereon.

Bidder (Entity Name)	Signature
Street & Mailing Address	Print Name
City, State & Zip	Date Signed
Telephone Number	Fax Number
E-mail Address	

Bidder Shall Return Completed Form with Offer.

NON-COLLUSION AFFIDAVIT OF PRIME BIDDER

State of TEXAS

County of JEFFERSON

_____, being first duly sworn, deposes and says that:

(1) He is _____ of _____, the Bidder that has submitted the attached Bid;

(2) He is fully informed respecting the preparation and contents of the attached Bid and of all pertinent circumstances respecting such Bid;

(3) Such Bid is genuine and is not a collusive or sham Bid;

(4) Neither the said Bidder nor any of its officers, partners, owners, agents, representatives, employees or parties in interest, including this affiant, has in any way colluded, conspired, connived or agreed, directly or indirectly with another Bidder, firm or person to submit a collusive or sham Bid in connection with the Contract for which the attached Bid has been submitted or to refrain from bidding in connection with such Contract, or has in any manner, directly or indirectly, sought by agreement or collusion or communication or conference with any other Bidder, firm or person to fix the price or prices in the attached Bid or of any other Bidder, or to fix an overhead, profit or cost element of the Bid price or the Bid price of any other Bidder, or to secure through any collusion, conspiracy, connivance or unlawful agreement any advantage against the _____ (Local Public Agency) or any person interested in the proposed Contract; and

(5) The price or prices quoted in the attached Bid are fair and proper and are not tainted by any collusion, conspiracy, connivance or unlawful agreement on the part of the Bidder or any of its agents, representatives, owners, employees, or parties in interest, including this affiant.

(Signed) _____

_____

Title

Subscribed and sworn to me this _____ day of _____.

By: _____

Notary Public

My commission expires _____

Bidder Shall Return Completed Form with Offer.

STATEMENT OF BIDDER'S QUALIFICATIONS

All questions must be answered and the data given must be clear and comprehensive. This statement must be notarized. If necessary, questions may be answered on separate attached sheets. The Bidder may submit any additional information he desires.

1. Name of Bidder_____.
2. Permanent main office address

   _____

   _____
3. When organized_____.
4. If a corporation, where incorporated_____.
5. How many years have been engaged in the contracting business under your present firm or trade name? _____
6. Contracts on hand: (Schedule these, showing amount of each contract and the appropriate anticipated dates of completion)

   _____

   _____

   _____

General character of work performed by your company

7. Have you ever failed to complete any work awarded to you? _____
8. Have you ever defaulted on a Contract? _____

   If so, where and why? _____

   _____

   _____
9. Have you ever been fined or had your license suspended by a Contractor's Licensing Board? _____

   If so, where and why? _____

   _____

   _____
10. List the more important projects recently completed by your company, stating the approximate cost for each, and the month and year completed (attach to back of this document).
11. List your major equipment available for this Contract (attach to back of this document).
12. List your experience in construction work similar in scope and scale to this project (attach to back of this document).
13. Background and experience of the principal members of your organization, including the officers (attach to back of this document).
14. Credit available: $_____
15. Give Bank reference:_____

Bidder Shall Return Completed Form with Offer.

STATEMENT OF BIDDER'S QUALIFICATIONS
(Continued)

16. Will you, upon request, fill out a detailed financial statement and furnish any other information that may be required by the Owner? _____

The undersigned hereby authorizes and requests any person, firm, or corporation to furnish any information requested by the Owner, in verification of the recitals comprising this statement of Bidder's Qualifications.

The Bidder shall provide a brief description of any litigation or administrative proceeding of the following types, either pending or concluded within the proceeding year, to which the Bidder (and the ultimate controlling person, if different from the Bidder) or any of its directors or executive officers was a party or of which the property of any such person is or was the subject; the names of the parties and the court or agency in which such litigation or proceeding is or was pending shall be given:

(a) Administrative or judicial proceedings of any state federal agency or authority concerning environmental violations;

(b) Proceedings which may have a material effect upon the solvency of the ultimate holding company, including but not necessarily limited to, bankruptcy and receivership; and

(c) Criminal proceedings.

Dated at_____this_____day of_____, 20____.

_____

(Name of Bidder)

By _____

Title _____

STATE OF_____)

§. COUNTY OF_____)

_____being duly sworn deposes and says that he is

_____of _____
(Name of Organization)

and that the answers to the foregoing questions and all statements therein contained are true and correct.
SUBSCRIBED AND SWORN TO BEFORE ME this_____day of _____
_____, 2017.

_____

(Notary Public)

My Commission Expires:

_____

Bidder Shall Return Completed Form with Offer.

Vendor References

Please list at least three (3) companies or governmental agencies (preferably a municipality) where the same or similar products and/or services as contained in this specification package were recently provided.

THIS FORM MUST BE RETURNED WITH YOUR BID.

REFERENCE ONE

Government/Company Name: _____

Address: _____

Contact Person and Title: _____

Phone: _____ Fax: _____

Email Address: _____ Contract Period: _____

Scope of Work: _____

REFERENCE TWO

Government/Company Name: _____

Address: _____

Contact Person and Title: _____

Phone: _____ Fax: _____

Email Address: _____ Contract Period: _____

Scope of Work: _____

REFERENCE THREE

Government/Company Name: _____

Address: _____

Contact Person and Title: _____

Phone: _____ Fax: _____

Email Address: _____ Contract Period: _____

Scope of Work: _____

Bidder Shall Return Completed Form with Offer.

BID BOND

KNOW ALL MEN BY THESE PRESENTS, that we the undersigned, _____ _____ as PRINCIPAL, and _____, as SURETY are held and firmly bound unto (County) hereinafter called the "Local Public Agency", in the penal sum of _____ Dollars, ($_____), lawful money of the United States, for the payment of which sum well and truly to be made, we bind ourselves, our heirs, executors, administrators, successors, and assigns, jointly and severally, firmly by these presents.

THE CONDITION OF THIS OBLIGATION IS SUCH, that whereas the Principal has submitted the Accompanying Bid, dated _____, for _____

NOW, THEREFORE, the Principal shall not withdraw said Bid within the period specified therein after the opening of the same, or, if no period be specified, within thirty (30) days after the said opening, and shall within the period specified therefor, or if no period be specified, within ten (10) days after the prescribed forms are presented to him for signature, enter into a written contract with the Local Public Agency in accordance with the Bid as accepted, and give bond with good and sufficient surety or sureties, as may be required, for the faithful performance and proper fulfillment of such contract; or in the event of the withdrawal of said Bid within the period specified, or the failure to enter into such Contract and give such bond within the time specified, if the Principal shall pay the Local Public Agency the difference between the amount specified in said Bid and the amount for which the local Public Agency may procure the required work or supplies or both, if the latter be in excess of the former, then the above obligation shall be void and of no effect, otherwise to remain in full force and virtue.

IN WITNESS THEREOF, the above parties have executed this instrument this _____ day of _____, the name and corporate seal of each corporate party being hereto affixed and these present signed by its undersigned representative, pursuant to authority of its governing body.

(SEAL)

_____

(SEAL)

Attest: By: _____

Affix
Corporate
Seal

Attest: By: _____

SAMPLE

Affix
Corporate
Seal

Attest: By: _____

Countersigned

By _____

* Attorney-in-Fact, State of Texas

SAMPLE

CERTIFICATE AS TO CORPORATE PRINCIPAL

I, _____, certify that I am the Secretary of the Corporation named as Principal in the bid bond; that _____, who signed the said bond on behalf of the Principal was then ____ _____ of said corporation; that I know his/her signature, and his/her signature thereto is genuine; and that said bond was duly signed, sealed, and attested to, on behalf of said corporation by authority of its governing body.

Corporate Seal

Title: _____

* Power-of-attorney for person signing for Surety Company must be attached to bond.

SAMPLE

PAYMENT BOND

KNOW ALL MEN BY THESE PRESENTS that:

_____
(Name of Contractor or Company)

_____
(Address)

a _____, hereinafter called Principal,
(Corporation / Partnership)

and _____
(Name of Surety Company)

_____
(Address)

hereinafter called Surety, are held and firmly bound unto

_____
(Name of Recipient)

_____
(Recipient's Address)

hereinafter called OWNER, in the penal sum of $ _____

Dollars, $ _____ in lawful money of the United States, for this payment of which sum well and truly to be made, we bind ourselves, successors, and assigns, jointly and severally, firmly by these presents.

THE CONFIDENTIALITY OF THIS OBLIGATION is such that whereas, the Principal entered into a certain contract with the OWNER, dated the ___ day of _____, a copy of which is hereto attached and made a part hereof for the construction of:

_____
(Project Name)
_____

NOW, THEREFORE, if the Principal shall promptly make payment to all persons, firms, SUB-CONTRACTORS, and corporations furnishing materials for or performing labor in the prosecution of the WORK provided for in such contract, and any authorized extension or modification thereof, including all amounts due for materials, lubricants, oil, gasoline, coal and coke, repairs on machinery, equipment and tools, consumed or used in connection with the construction of such WORK, and all insurance premiums on said WORK, and for all labor, performed in such WORK whether by SUB-CONTRACTOR or otherwise, then this obligation shall be void; otherwise to remain in full force and effect.

PROVIDED, FURTHER, that the said Surety, for value received hereby stipulates and agrees that no change, extension of time, alteration or addition to the terms of the contract or to WORK to be performed thereunder or

SAMPLE

the SPECIFICATIONS accompanying the same shall in any way affect its obligation on this BOND, and it does hereby waive notice of any such change, extension of time, alteration or addition to the terms of the contract or to the WORK or to the SPECIFICATIONS.

PROVIDED, FURTHER, that no final settlement between the OWNER and the CONTRACTOR shall abridge the right of any beneficiary hereunder, whose claim may be unsatisfied.

IN WITNESS WHEREOF, this instrument is executed in _____ counter-parts, each on of
(Number)
which shall be deemed an original, this the _____ day of _____.

ATTEST: _____
(Principal)

_____ By _____ (s)
(Principal Secretary)

(SEAL)

_____
(Witness as to Principal) (Address)

_____ _____
(Address)

ATTEST: _____
(Surety)

_____ By _____
(Witness as to Surety (Attorney in Fact)

_____ _____
(Address) (Address)

NOTE: Date of BOND must not be prior to date of Contract. If CONTRACTOR is Partnership, all partners should execute BOND.

SAMPLE

PERFORMANCE BOND

KNOW ALL MEN BY THESE PRESENTS that:

_____

(Name of Contractor or Company)

_____

(Address)

a _____ hereinafter called Principal, and

_____

(Name of Surety Company)

_____

(Address)

hereinafter called Surety, are held and firmly bound unto

_____

(Name of Grant Recipient)

_____

(Grant Recipient's Address)

hereinafter called OWNER, in the penal sum of $ _____

Dollars ($ _____) in lawful money of the United States, for the payment of which sum well and truly to be made we bind ourselves, successors, and assigns, jointly and severally, firmly in these presents.

THE CONDITION OF THIS OBLIGATION is such that whereas, the Principal entered into a certain contract with the OWNER dated the ___ day of _____, a copy of which is hereto attached and made a part hereof for the construction of:

_____

_____

_____

NOW THEREFORE, if the Principal shall well, truly and faithfully perform its duties in all the undertakings, covenants, terms, conditions, and agreements of said contract during the original term thereof, and any extensions thereof which may be granted by the OWNER, with or without notice to the Surety and during the one year guaranty period, and if he shall satisfy all claims and demands incurred under such contract, and shall fully indemnify and save harmless the OWNER from all costs and damages which it may suffer by reason of failure to do so, and shall reimburse and repay the OWNER all outlay and expense which the OWNER may incur in making good any default, then this obligation shall be void, otherwise to remain in full force and effect.

SAMPLE

PROVIDED FURTHER, that the said Surety, for value received hereby stipulates and agrees that no change, extension of time, alteration or addition to the terms of the contract or to WORK to be performed thereunder or the SPECIFICATIONS accompanying the same shall in any way affect its obligation on this BOND, and it does hereby waive notice of any such change, extension of time, alteration or addition to the terms of the contract or to the WORK or to the SPECIFICATIONS.

PROVIDED, FURTHER, that no final settlement between the OWNER and the Principal shall abridge the right of any beneficiary hereunder, whose claim may be unsatisfied.

IN WITNESS WHEREOF, this instrument is executed in _____

counterparts, each one of which shall be deemed an original, this the _____ day of

_____.

ATTEST: _____
(Principal)

_____ By _____(s)
(Principal Secretary)

(SEAL)

_____ _____
(Witness as to Principal) (Address)

_____ _____
(Address)

_____

ATTEST: _____
(Surety)

_____ By _____
(Witness as to Surety) (Attorney in Fact)

_____ _____
(Address) (Address)

NOTE: Date of BOND must not be prior to date of Contract. If PRINCIPAL/CONTRACTOR is Partnership, all partners should execute BOND.

SAMPLE

ATTORNEY'S REVIEW CERTIFICATION

I, the undersigned, _____, the duly authorized and acting legal representative of the _____, do hereby certify as follows:

I have examined the attached contract(s) and surety bonds and am of the opinion that each of the agreements may be duly executed by the proper parties, acting through their duly authorized representatives; that said representatives have full power and authority to execute said agreements on behalf of the respective parties; and that the agreements shall constitute valid and legally binding obligations upon the parties executing the same in accordance with terms, conditions and provisions thereof.

Attorney's signature: _____ Date: _____

Print Attorney's Name: _____

Texas State Bar Number: _____

SAMPLE

COUNTY OF JEFFERSON

STANDARD FORM OF AGREEMENT

FOR OWNER-CONTRACTOR PROJECTS

Project Number: (IFB 17-029/JW)
Project Name: (Re-bid) Jefferson County Sheriff's Office Hangar Building at Jack Brooks Regional Airport

STATE of TEXAS }

JEFFERSON COUNTY}

THIS AGREEMENT, made and entered into this ____ day of _____, A.D. 2017, by and between (Construction Firm) of the COUNTY of Jefferson in the STATE OF TEXAS, thereunto duly authorized so to do, Party of the First Part, hereinafter termed OWNER, and (Construction Firm) of the City of _____ _____ County of _____ in the State of Texas, Party of the Second Part, hereinafter termed CONTRACTOR.

Scope of Work: In accordance with Jefferson County Invitation for Bid (IFB 17-029/JW), Jefferson County Sheriff's Office Hangar Building at Jack Brooks Regional Airport, CONTRACTOR will: furnish all labor, material and equipment, and perform all work necessary to construct a hangar building for the Jefferson County Sheriff's Office (located at the Jack Brooks Regional Airport); in accordance with drawings, specifications, and addenda- if applicable as prepared by LJA Engineering, Inc. Funding for this project has been made available by The Department of Homeland Security.

WITNESSETH: That for and inconsideration of the payments and agreements hereinafter mentioned, to be made and performed by the Party of the First Part (OWNER) and under the conditions expressed in the bond bearing even date herewith, the said Party of the Second Part (CONTRACTOR), hereby agrees with the said Party of the First Part (OWNER) to commence and complete the construction of certain improvements described as follow: and all extra work in connection therewith, under the terms as stated in the General Conditions of the Agreement and at his (or their) own proper cost and expense to furnish all materials, supplies, machinery, equipment, tools, superintendence, labor, insurance, and other accessories and services necessary to complete the said construction, in accordance with the Notice to Contractors, General and Special Conditions of Agreement, Plans and other drawings and printed or written explanatory matter thereof, and the Specifications and addenda therefore, as prepared by LJA Engineering, Inc., herein entitled the ENGINEER, each of which has been identified by the CONTRACTOR and the ENGINEER, together with the CONTRACTOR'S written proposal, the General Conditions of the Agreement, the Performance and Payment Bonds hereto attached; all of which are made a part hereof and collectively evidence and constitute the entire contract.

The CONTRACTOR hereby agrees to commence work within ten (10) calendar days after the date written notice to do so shall have been given to him, and to substantially complete within ___ consecutive calendar days after issuance of the "Notice to Proceed" and to be at Final Completion within ___ consecutive calendar days after the issuance of the "Notice to Proceed", subject to such extensions of time as are provided by the General and Special Conditions.

The OWNER agrees to pay the CONTRACTOR in current funds the price or prices shown in the proposal, which forms a part of this contract, such payments to be subject to the General and Special Conditions of the contract.

IN WITNESS WHEREOF, the parties to these presents have executed this Agreement in the year and day first above written.

Party of the First Part (OWNER)	Party of the Second Part (CONTRACTOR)
By: _____	By: _____
ATTEST: _____	ATTEST: _____

GENERAL CONTRACT CONDITIONS FOR CONSTRUCTION

1. Contract and Contract Documents

1.1 The project to be constructed pursuant to this contract will be financed with assistance from The Department of Homeland Security and is subject to all applicable Federal and State laws and regulations.

1.2 The Plans, Specifications and Addenda, hereinafter enumerated in Paragraph 1 of the Supplemental General Conditions shall form part of this contract and the provisions thereof shall be as binding upon the parties hereto as if they were herein fully set forth.

2. Definitions

2.1 Whenever used in any of the contract Documents, the following meanings shall be given to the terms here in defined:

2.1.1 The term "Contract" means the Contract executed between Jefferson County hereinafter called the Owner and (Construction Firm), hereinafter called Contractor, of which these GENERAL CONDITIONS, form a part.

2.1.2 The term "Project Area" means the area within which are the specified Contract limits of the Improvements contemplated to be constructed in whole or in part under this contract.

2.1.3 The term "Engineer" means LJA Engineering, Inc., Engineer in charge, serving the Owner with architectural or engineering services, his successor, or any other person or persons, employed by the Owner for the purpose of directing or having in charge the work embraced in this Contract.

2.1.4 The term "Contract Documents" means and shall include the following: Executed Contract, Addenda (if any), Invitation for Bids, Instructions to Bidders, Signed Copy of Bid, General Conditions, Special Conditions, Technical Specifications, and Drawings (as listed in the Schedule of Drawings).

3. Supervision by Contractor

3.1 Except where the Contractor is an individual and gives his personal supervision to the work, the Contractor shall provide a competent superintendent, satisfactory to the Local Public Agency and the Engineer, on the work at all times during working hours with full authority to act for him. The Contractor shall also provide an adequate staff for the proper coordination and expediting of his work.

3.2 The Contractor shall lay out his own work and he shall be responsible for all work executed by him under the Contract. He shall verify all figures and elevations before proceeding with the work and will be held responsible for any error resulting from his failure to do so.

4. Subcontracts

4.1 The Contractor shall not execute an agreement with any subcontractor or permit any subcontractor to perform any work included in this contract until he has verified the subcontractor as eligible to participate in federally funded contracts.

4.2 No proposed subcontractor shall be disapproved by the County except for cause.

4.3 The Contractor shall be as fully responsible to the County for the acts and omissions of his subcontractors, and of persons either directly or indirectly employed by them.

SAMPLE

4.4 The Contractor shall cause appropriate provisions to be inserted in all subcontracts relative to the work and required compliance by each subcontractor with the applicable provisions of the Contract.

4.5 Nothing contained in the Contract shall create any contractual relation between any subcontractor and the Owner.

5. Fitting and Coordination of Work

5.1 The Contractor shall be responsible for the proper fitting of all work and for the coordination of the operations of all trades, subcontractors, or material suppliers engaged upon this Contract.

6. Payments to Contractor

6.1 Partial Payments

6.1.1 The Contractor shall prepare his requisition for partial payment as of the last day of the month and submit it, with the required number of copies, to the Engineer for his approval. The amount of the payment due the Contractor shall be determined by adding to the total value of work completed to date, the value of materials properly stored on the site and deducting (1) ten percent (10%) of the total amount, to be retained until final payment and (2) the amount of all previous payments. The total value of work completed to date shall be based on the estimated quantities of work completed and on the unit prices contained in the agreement. The value of materials properly stored on the site shall be based upon the estimated quantities of such materials and the invoice prices. Copies of all invoices shall be available for inspection of the Engineer.

6.1.2 Monthly or partial payments made by the Owner to the Contractor are moneys advanced for the purpose of assisting the contractor to expedite the work of construction. The Contractor shall be responsible for the care and protection of all materials and work upon which payments have been made until final acceptance of such work and materials by the Owner. Such payments shall not constitute a waiver of the right of the Owner to require the fulfillment of all terms of the Contract and the delivery of all improvements embraced in this Contract complete and satisfactory to the Owner in all details.

6.2 Final Payment

6.2.1 After final inspection and acceptance by the Owner of all work under the Contract, the Contractor shall prepare his requisition for final payment which shall be based upon the careful inspection of each item of work at the applicable unit prices stipulated in the Agreement. The total amount of the final payment due the Contractor under this contract shall be the amount computed as described above less all previous payments.

6.2.2 The Owner before paying the final estimate, shall require the Contractor to furnish releases or receipts from all subcontractors having performed any work and all persons having supplied materials, equipment (installed on the Project) and services to the Contractor, if the Owner deems it necessary in order to protect its interest. The Owner may, if it deems such action advisable, make payment in part or in full to the Contractor without requiring the furnishing of such releases or receipts and any payments made shall in no way impair the obligations of any surety or sureties furnished under this Contract.

6.2.3 Any amount due the Owner under Liquidated Damages, shall be deducted from the final payment due the contractor.

6.3 Payments Subject to Submission of Certificates

6.3. Each payment to the Contractor by the Owner shall be made subject to submission by the Contractor of all written certifications required of him and his subcontractors.

6.4 Withholding Payments

6.4.1 The Owner may withhold from any payment due the Contractor whatever is deemed necessary to protect the Owner, and if so elects, may also withhold any amounts due from the Contractor to any subcontractors or material dealers, for work performed or material furnished by them. The foregoing provisions shall be construed solely for the benefit of the Owner and will not require the Owner to determine or adjust any claims or disputes between the Contractor and his subcontractors or material dealers, or to withhold any moneys for their protection unless the Owner elects to do so. The failure or refusal of the Owner to withhold any moneys from the Contractor shall in no way impair the obligations of any surety or sureties under any bond or bonds furnished under this Contract.

7. Changes in the Work

7.1 The Owner may make changes in the scope of work required to be performed by the Contractor under the Contract without relieving or releasing the Contractor from any of his obligations under the Contract or any guarantee given by him pursuant to the Contract provisions, and without affecting the validity of the guaranty bonds, and without relieving or releasing the surety or sureties of said bonds. All such work shall be executed under the terms of the original Contract unless it is expressly provided otherwise. Additionally, all such change orders must be approved by the Jefferson County Purchasing Department prior to execution of same.

7.2 Except for the purpose of affording protection against any emergency endangering health, life, limb or property, the Contractor shall make no change in the materials used or in the specified manner of constructing and/or installing the improvements or supply additional labor, services or materials beyond that actually required for the execution of the Contract, unless in pursuance of a written order from the Owner authorizing the Contractor to proceed with the change. No claim for an adjustment of the Contract Price will be valid unless so ordered.

7.3 If applicable unit prices are contained in the Agreement, the Owner may order the Contractor to proceed with desired unit prices specified in the Contract; provided that in case of a unit price contract the net value of all changes does not increase the original total amount of the agreement by more than twenty-five percent (25%) or decrease the original the total amount by eighteen percent (18%).

7.4 Each change order shall include in its final form:

7.4.1 A detailed description of the change in the work.

7.4.2 The Contractor's proposal (if any) or a confirmed copy thereof.

7.4.3 A definite statement as to the resulting change in the contract price and/or time.

7.4.4 The statement that all work involved in the change shall be performed in accordance with contract requirements except as modified by the change order.

7.4.5 The procedures as outlined in this Section for a unit price contract also apply in any lump sum contract.

SAMPLE

8. Claims for Extra Cost

8.1 If the Contractor claims that any instructions by Drawings or otherwise involve extra cost or extension of time, he shall, within ten days after the receipt of such instructions, and in any event before proceeding to execute the work, submit his protest thereto in writing to the Owner, stating clearly and in detail the basis of his objections. No such claim will be considered unless so made.

8.2 Claims for additional compensation for extra work, due to alleged errors in ground elevations, contour lines, or bench marks, will not be recognized unless accompanied by certified survey data, made prior to the time the original ground was disturbed, clearly showing that errors exist which resulted, or would result, in handling more material, or performing more work, than would be reasonably estimated from the Drawings and maps issued.

8.3 Any discrepancies which may be discovered between actual conditions and those represented by the Drawings and maps shall be reported at once to the Owner and work shall not proceed except at the Contractor's risk, until written instructions have been received by him from the Owner.

8.4 If, on the basis of the available evidence, the Owner determines that an adjustment of the Contract Price and/or time is justifiable, a change order shall be executed.

9. Termination, Delays, and Liquidated Damages

9.1 Right of the Owner to Terminate Contract.

9.2 In the event that any of the provisions of this contract are violated by the Contractor, or by any of his subcontractors, the Owner may serve written notice upon the Contractor and the Surety of its intention to terminate the contract. The notices shall contain the reasons for such intention to terminate the contract, and unless such violation or delay shall cease and satisfactory arrangement of correction be made within ten days, the contract shall, upon the expiration of said ten (10) days, cease and terminate. In the event of any such termination, the Owner shall immediately serve notice thereof upon the Surety and the Contractor. The Surety shall have the right to take over and perform the contract. Provided, however, that if the Surety does not commence performance thereof within ten (10) days from the date of the mailing to such Surety of notice of termination, the Owner may take over the work and complete the project by bid/contract or by force account at the expense of the Contractor and his Surety shall be liable to the Owner for any excess cost incurred. In such event the Owner may take possession of and utilize in completing the work, such materials, appliances, and plant as may be on the site of the work and necessary therefore.

9.3 Liquidated Damages for Delays.

9.3.1 If the work is not completed within the time stipulated in the applicable bid for Lump Sum or Unit Price Contract provided, the Contractor shall pay to the Owner as fixed, agreed, and liquidated damages (it being impossible to determine the actual damages occasioned by the delay) the amount of $500.00 for each calendar day of delay, until the work is completed. The Contractor and his sureties shall be liable to the Owner for the amount thereof.

9.4 Excusable Delays.

9.4.1 The right of the Contractor to proceed shall not be terminated nor shall the Contractor be charged with liquidated damages for any delays in the completion of the work due to:

SAMPLE

9.4.2 Any acts of the Government, including controls or restrictions upon or requisitioning of materials, equipment, tools, or labor by reason of war, national defense, or any other national emergency;

9.4.3 Any acts of the Owner;

9.4.4 Causes not reasonably foreseeable by the parties to this Contract at the time of the execution of the Contract which are beyond the control and without the fault or negligence of the Contractor, including, but not restricted to, acts of God or of the public enemy, acts of another Contractor in the performance of some other contract with the Owner, fires, floods, epidemics, quarantine, restrictions, strikes, freight embargoes, and weather of unusual severity such as hurricanes, tornadoes, cyclones and other extreme weather conditions.

9.4.5 Provided, however, that the Contractor promptly notifies the Owner within ten (10) days in writing of the cause of the delay. Upon receipt of such notification, the Owner shall ascertain the facts and the cause and extent of delay. If, upon the basis of the facts and the terms of this contract, the delay is properly excusable, the Owner shall extend the time for completing the work for a period of time commensurate with the period of excusable delay.

10. Assignment or Novation

10.1 The Contractor shall not assign or transfer, whether by an assignment or novation, any of its rights, duties, benefits, obligations, liabilities, or responsibilities under this Contract without the written consent of the Owner; provided, however, that assignments to banks or other financial institutions may be made without the consent of the Owner. No assignment or novation of this Contract shall be valid unless the assignment or novation expressly provides that the assignment of any of the Contractor's rights or benefits under the Contract is subject to a prior lien for labor performed, services rendered, and materials, tools, and equipment supplied for the performance of the work under this Contract in favor of all persons, firms, or corporations rendering such labor or services or supplying such materials, tools, or equipment.

11. Disputes

11.1 All disputes arising under this Contract or its interpretation except those disputes covered by FEDERAL LABOR STANDARDS PROVISIONS whether involving law or fact or both, or extra work, and all claims for alleged breach of contract shall, within ten (10) days of commencement of the dispute, be presented by the Contractor to the Owner for decision. Any claim not presented within the time limit specified in this paragraph shall be deemed to have been waived, except that if the claim is of a continuing character and notice of the claim is not given within ten (10) days of its commencement, the claim will be considered only for a period commencing ten (10) days prior to the receipt of the Owner.

11.2 The Contractor shall submit in detail his claim and his proof thereof.

11.3 If the Contractor does not agree with any decision of the Owner, he shall in no case allow the dispute to delay the work but shall notify the Owner promptly that he is proceeding with the work under protest.

12. Technical Specifications and Drawings

12.1 Anything mentioned in the Technical Specifications and not shown on the Drawings or vice versa, shall be of like effect as if shown on or mentioned in both. In case of difference between Drawings and Technical Specifications, the Technical Specifications shall govern. In case of any discrepancy in Drawings, or Technical Specifications, the matter

shall be immediately submitted to the Owner, without whose decision, said discrepancy shall not be adjusted by the Contractor, save only at his own risk and expense.

13. Shop Drawings

13.1 All required shop drawings, machinery details, layout drawings, etc. shall be submitted to the Engineer in three (3) copies for approval sufficiently in advance of requirements to afford ample time for checking, including time for correcting, resubmitting and rechecking if necessary. The Contractor may proceed, only at his own risk, with manufacture or installation of any equipment or work covered by said shop drawings, etc. until they are approved and no claim, by the Contractor, for extension of the contract time shall be granted by reason of his failure in this respect.

13.2 Any drawings submitted without the Contractor's stamp of approval will not be considered and will be returned to him for proper resubmission. If any drawings show variations from the requirements of the Contract because of standard shop practice or other reason, the Contractor shall make specific mention of such variation in his letter of transmittal in order that, if acceptable, suitable action may be taken for proper adjustment of contract price and/or time, otherwise the Contractor will not be relieved of the responsibility for executing the work in accordance with the Contract even though the drawings have been approved.

13.3 If a shop drawing is in accordance with the contract or involves only a minor adjustment in the interest of the Owner not involving a change in contract price or time; the engineer may approve the drawing. The approval shall not relieve the Contractor from his responsibility for adherence to the contract or for any error in the drawing.

14. Requests for Supplementary Information

14.1 It shall be the responsibility of the Contractor to make timely requests of the Owner for any additional information not already in his possession which should be furnished by the Owner under the terms of this Contract, and which he will require in the planning and execution of the work. Such requests may be submitted from time to time as the need approaches, but each shall be filed in ample time to permit appropriate action to be taken by all parties involved so as to avoid delay. Each request shall be in writing, and list the various items and the latest date by which each will be required by the Contractor. The first list shall be submitted within two weeks after Contract award and shall be as complete as possible at that time. The Contractor shall, if requested, furnish promptly any assistance and information the Engineer may require in responding to these requests of the Contractor. The Contractor shall be fully responsible for any delay in his work or to others arising from his failure to comply fully with the provision of this section.

15. Materials and Workmanship

15.1 Unless otherwise specifically provided for in the technical specifications, all workmanship, equipment, materials and articles incorporated in the work shall be new and the best grade of the respective kinds for the purpose. Where equipment, materials, articles or workmanship are referred to in the technical specifications as "equal to" any particular standard, the Engineer shall decide the question of equality.

15.2 The Contractor shall furnish to the Owner for approval the manufacturer's detailed specifications for all machinery, mechanical and other special equipment, which he contemplates installing together with full information as to type, performance characteristics, and all other pertinent information as required, and shall likewise submit for approval full information concerning all other materials or articles which he proposes to incorporate.

15.3 Machinery, mechanical and other equipment, materials or articles installed or used without such prior approval shall be at the risk of subsequent rejection.

15.4 Materials specified by reference to the number or symbol of a specific standard, shall comply with requirements in the latest revision thereof and any amendment or supplement thereto in effect on the date of the Invitation for Bids, except as limited to type, class or grade, or modified in the technical specifications shall have full force and effect as though printed therein.

15.5 The Owner may require the Contractor to dismiss from the work such employee or employees as the Owner or the Engineer may deem incompetent, or careless, or insubordinate.

16. Samples, Certificates and Tests

16.1 The Contractor shall submit all material or equipment samples, certificates, affidavits, etc., as called for in the contract documents or required by the Engineer, promptly after award of the contract and acceptance of the Contractor's bond. No such material or equipment shall be manufactured or delivered to the site, except at the Contractor's own risk, until the required samples or certificates have been approved in writing by the Engineer. Any delay in the work caused by late or improper submission of samples or certificates for approval shall not be considered just cause for an extension of the contract time.

16.2 Each sample submitted by the Contractor shall carry a label giving the name of the Contractor, the project for which it is intended, and the name of the producer. The accompanying certificate or letter from the Contractor shall state that the sample complies with contract requirements, shall give the name and brand of the product, its place of origin, the name and address of the producer and all specifications or other detailed information which will assist the Engineer in making a prompt decision regarding the acceptability of the sample. It shall also include the statement that all materials or equipment furnished for use in the project will comply with the samples and/or certified statements.

16.3 Approval of any materials shall be general only and shall not constitute a waiver of the Owner's right to demand full compliance with Contract requirements. After actual deliveries, the Engineer will have such check tests made as he deems necessary in each instance and may reject materials and equipment and accessories for cause, even though such materials and articles have been given general approval. If materials, equipment or accessories which fail to meet check tests have been incorporated in the work, the Engineer will have the right to cause their removal and replacement by proper materials or to demand and secure such reparation by the Contractor as is equitable.

16.4 Except as otherwise specifically stated in the Contract, the costs of sampling and testing will be divided as follows:

16.4.1 The Contractor shall furnish without extra cost, including packing and delivery charges, all samples required for testing purposes, except those samples taken on the project by the Engineer;

16.4.2 The Contractor shall assume all costs of re-testing materials which fail to meet contract requirements;

16.4.3 The Contractor shall assume all costs of testing materials offered in substitution for those found deficient;

16.4.4 The Owner will pay all other expenses.

17. Permits and Codes

17.1 The Contractor shall give all notices required by and comply with all applicable laws, ordinances, and codes of the Local Government. All construction work and/or utility installations shall comply with all applicable ordinances, and codes including all written

waivers. Before installing any work, the Contractor shall examine the drawings and technical specifications for compliance with applicable ordinances and codes and shall immediately report any discrepancy to the Owner. Where the requirements of the drawings and technical specifications fail to comply with such applicable ordinances or codes, the Owner will adjust the Contract by Change Order to conform to such ordinances or codes (unless waivers in writing covering the difference have been granted by the governing body or department) and make appropriate adjustment in the Contract Price or stipulated unit prices.

17.2 Should the Contractor fail to observe the foregoing provisions and proceed with the construction and/or install any utility at variance with any applicable ordinance or code, including any written waivers (notwithstanding the fact that such installation is in compliance with the drawings and technical specifications), the Contractor shall remove such work without cost to the Owner.

17.3 The Contractor shall at his own expense, secure and pay for all permits for street pavement, sidewalks, shed, removal of abandoned water taps, sealing of house connection drains, pavement cuts, buildings, electrical, plumbing, water, gas and sewer permits required by the local regulatory body or any of its agencies.

17.4 The Contractor shall comply with applicable local laws and ordinances governing the disposal of surplus excavation, materials, debris and rubbish on or off the Project Area and commit no trespass on any public or private property in any operation due to or connected with the Improvements contained in this Contract.

17.5 The Contractor will be required to make arrangements for and pay the water, electrical power, or any other utilities required during construction.

17.6 During construction of this project, the Contractor shall use every means possible to control the amount of dust created by construction. Prior to the close of a day's work, the Contractor, if directed by the Owner, shall moisten the bank and surrounding area to prevent a dusty condition.

18. Care of Work

18.1 The Contractor shall be responsible for all damages to person or property that occur as a result of his fault or negligence in connection with the prosecution of the work and shall be responsible for the proper care and protection of all materials delivered and work performed until completion and final acceptance.

18.2 The Contractor shall provide sufficient competent watchmen, both day and night, including Saturdays, Sundays, and holidays, from the time the work is commenced until final completion and acceptance.

18.3 In an emergency affecting the safety of life, limb or property, including adjoining property, the Contractor, without special instructions or authorization from the Owner is authorized to act at his discretion to prevent such threatened loss or injury, and he shall so act. He shall likewise act if instructed to do so by the Owner.

18.4 The Contractor shall avoid damage as a result of his operations to existing sidewalks, streets, curbs, pavements, utilities (except those which are to be replaced or removed), adjoining property, etc., and he shall at his own expense completely repair any damage thereto caused by his operations.

18.5 The Contractor shall shore up, brace, underpin, secure, and protect as maybe necessary, all foundations and other parts of existing structures adjacent to, adjoining, and in the vicinity of the site, which may be in any way affected by the excavations or other operations connected with the construction of the improvements included in this Contract.

The Contractor shall be responsible for the giving of any and all required notices to any adjoining or adjacent property owner or other party before the commencement of any work. The Contractor shall indemnify and save harmless the Owner from any damages on account of settlements or the loss of lateral support of adjoining property and from all loss or expense and all damages for which the Owner may become liable in consequence of such injury or damage to adjoining and adjacent structures and their premises.

19. Accident Prevention

19.1 No laborer or mechanic employed in the performance of this Contract shall be required to work in surroundings or under working conditions which are unsanitary, hazardous, or dangerous to his health or safety as determined under construction safety and health standards promulgated by the Secretary of Labor.

19.2 The Contractor shall exercise proper precaution at all times for the protection of persons and property and shall be responsible for all damages to persons or property, either on or off the site, which occur as a result of his prosecution of the work.

19.3 The Contractor shall maintain an accurate record of all cases of death, occupational disease, or injury requiring medical attention or causing loss of time from work, arising out of and in the course of employment on work under the Contract. The Contractor shall promptly furnish the Owner with reports concerning these matters.

19.4 The Contractor shall indemnify and save harmless the Owner from any claims for damages resulting from property damage, personal injury and/or death suffered or alleged to have been suffered by any person as a result of any work conducted under this contract.

19.5 The Contractor shall provide trench safety for all excavations more than five feet deep prior to excavation. All OSHA Standards for trench safety must be adhered to by the Contractor.

19.6 The contractor shall at all times conduct his work in such a manner as to insure the least possible inconvenience to vehicular and pedestrian traffic. At the close of the work each day, all streets where possible in the opinion of the Owner, shall be opened to the public in order that persons living in the area may have access to their homes or businesses by the use of the streets. Barricades, warning signs, and necessary lighting shall be provided to the satisfaction of the Owner at the expense of the Contractor.

20. Sanitary Facilities

20.1 The Contractor shall furnish, install and maintain ample sanitary facilities for the workmen. As the needs arise, a sufficient number of enclosed temporary toilets shall be conveniently placed as required. Drinking water shall be provided from an approved source, so piped or transported as to keep it safe and fresh and served from single service containers or satisfactory types of sanitary drinking stands or fountains. All such facilities and services shall be furnished in strict accordance with existing and governing health regulations.

21. Use of Premises

21.1 The Contractor shall confine his equipment, storage of materials, and construction operations to the contract limits as shown on the drawings and as prescribed by ordinances or permits, or as may be desired by the Owner, and shall not unreasonably encumber the site or public rights of way with his materials and construction equipment.

21.2 The Contractor shall comply with all reasonable instructions of the Owner and all existing state and local regulations regarding signs, advertising, traffic, fires, explosives, danger signals, and barricades.

22. Removal of Debris, Cleaning, Etc.

22.1 The Contractor shall, periodically or as directed during the progress of the work, remove and legally dispose of all surplus excavated material and debris, and keep the Project Area and public rights of way reasonably clear. Upon completion of the work, he shall remove all temporary construction facilities, debris and unused materials provided for work, and put the whole site of the work and public rights of way in a neat and clean condition.

23. Inspection

23.1 All materials and workmanship shall be subject to inspection, examination, or test by the Owner and Engineer at any and all times during manufacture or construction and at any and all places where such manufacture or construction occurs. The Owner shall have the right to reject defective material and workmanship or require its correction. Unacceptable workmanship shall be satisfactorily corrected. Rejected material shall be promptly segregated and removed from the Project Area and replaced with material of specified quality without charge. If the Contractor fails to proceed at once with the correction of rejected workmanship or defective material, the Owner may by contract or otherwise have the defects remedied or rejected materials removed from the Project Area and charge the cost of the same against any Monies which may be due the Contractor, without prejudice to any other rights or remedies of the Owner.

23.2 The Contractor shall furnish promptly all materials reasonably necessary for any tests which may be required. All tests by the Owner will be performed in such manner as not to delay the work unnecessarily and will be made in accordance with the provisions of the technical specifications.

23.3 The Contractor shall notify the Owner sufficiently in advance of back filling or concealing any facilities to permit proper inspection. If any facilities are concealed without approval or consent of the Owner, the Contractor shall uncover for inspection and recover such facilities at his own expense, when so requested by the Owner.

23.4 Should it be considered necessary or advisable by the Owner at any time before final acceptance of the entire work to make an examination of work already completed by uncovering the same, the Contractor shall on request promptly furnish all necessary facilities, labor, and material. If such work is found to be defective in any important or essential respect, due to fault of the Contractor or his subcontractors, the Contractor shall defray all the expenses of such examination and of satisfactory reconstruction. If, however, such work is found to meet the requirements of the Contract, the actual cost of labor and material necessarily involved in the examination and replacement, shall be allowed the Contractor and he shall, in addition, if completion of the work of the entire Contract has been delayed thereby, be granted a suitable extension of time on account of the additional work involved.

23.5 Inspection of materials and appurtenances to be incorporated in the improvements included in this Contract may be made at the place of production, manufacture or shipment, whenever the quantity justifies it, and such inspection and acceptance, unless otherwise stated in the technical specifications, shall be final, except as regards (1) latent defects, (2) departures from specific requirements of the Contract, (3) damage or loss in transit, or (4) fraud or such gross mistakes as amount to fraud. Subject to the requirements contained in the preceding sentence, the inspection of materials as a whole or in part will be made at the Project Site.

23.6 Neither inspection, testing, approval nor acceptance of the work in whole or in part, by the Owner or its agents shall relieve the Contractor or his sureties of full responsibility for materials furnished or work performed not in strict accordance with the Contract.

24. Review by Owner

24.1 The Owner and its authorized representatives and agents shall have access to and be permitted to observe and review all work, materials, equipment, payrolls, personnel records, employment conditions, material invoices, and other relevant data and records pertaining to this Contract, provided, however that all instructions and approval with respect to the work will be given to the Contractor only by the Owner through its authorized representatives or agents.

25. Final Inspection

25.1 When the Improvements included in this Contract are substantially completed, the Contractor shall notify the Owner in writing that the work will be ready for final inspection on a definite date which shall be stated in the notice. The Owner will make the arrangements necessary to have final inspection commenced on the date stated in the notice, or as soon thereafter as is practicable.

26. Deduction for Uncorrected Work

26.1 If the Owner deems it not expedient to require the Contractor to correct work not done in accordance with the Contract Documents, an equitable deduction from the Contract Price will be made by agreement between the Contractor and the Owner and subject to settlement, in case of dispute, as herein provided.

27. Insurance

The contractor (including any and all subcontractors as defined in Section 28.1.3 below) shall, at all times during the term of this contract, maintain insurance coverages with not less than the type and requirements shown below. Such insurance is to be provided at the sole cost of the contractor. These requirements do not establish limits of the contractor's liability.

All policies of insurance shall waive all rights of subrogation against the County, its officers, employees and agents; a copy of the policy wording or endorsement is required.

Contractor shall furnish Jefferson County with Certificate of Insurance naming Jefferson County as additional insured and will provide the actual policy wording or endorsement showing as such.

All insurance must be written by an insurer licensed to conduct business in the State of Texas.

Minimum Insurance Requirements

Public Liability, including Products & Completed Operations	$1,000,000
Excess Liability	$1,000,000

Property Insurance (policy below that is applicable to this project):
Improvements & Betterments Policy: Improvements/Remodeling (for Lease Tenants)
Builder's Risk Policy: Structural Coverage for Construction Projects
Installation Floater Policy: Improvements/Alterations to Existing Structure

Workers' Compensation	Statutory Coverage (see Section 28 Below)

28. Workers' Compensation Insurance

28.1 Definitions:

28.1.1 **Certificate of coverage ("Certificate")** – A copy of a certificate of insurance, a certificate of authority to self-insure issued by the commission, or a coverage agreement, DWC-81, DWC-82, DWC-83, or DWC-84 showing statutory workers' compensation

insurance coverage for the person's or entity's employees providing services on a project, for the duration of the project.

28.1.2 **Duration of the project** – Includes the time from the beginning of the work on the project until the contractor's/person's work on the project has been completed and accepted by the governmental entity.

28.1.3 **Persons providing services on the project ("subcontractor") in article 406.096** – Includes all persons or entities performing all or part of the services under the contractor has undertaken to perform on the project, regardless of whether that person contracted directly with the contractor and regardless of whether that person has employees. This includes, without limitation, independent contractors, subcontractor, leasing companies, motor carriers, owner-operators, employees of any such entity, or employees of any entity which furnishes persons to provide services on the project. "Services" includes, without limitation, providing, hauling or delivering equipment or materials, or providing labor, transportation, or other service related to a project. "Services" does not include activities unrelated to the project, such as food/beverage vendors, office supply deliveries, and delivery of portable toilets.

28.2 The Contractor shall provide coverage, based on proper reporting of classification code and payroll amounts and filing any coverage agreements, which meets the statutory requirements of Texas Labor Code, Section 401.011(44) for all employees of the contractor providing services on the project, for the duration of the project.

28.3 The Contractor must provide a certificate of coverage to the governmental entity prior to being awarded the contract – refer to Section 27 above.

28.4 If the coverage period shown on the Contractor's current certificate of coverage ends during the duration of the project, the Contractor must, prior to the end of the coverage period, file a new certificate of coverage with the governmental entity showing that coverage has been extended.

28.5 The Contractor shall obtain from each person providing services on a project, and provide to the governmental entity:

28.5.1 A certificate of coverage, prior to that person beginning work on the project, so the governmental entity will have on file certificates of coverage showing coverage for all persons providing services on the project; and

28.5.2 No later than seven (7) days after receipt by the Contractor, a new certificate of coverage showing extension of coverage, if the coverage period shown on the current certificate ends during the duration of the project.

28.6 The Contractor shall retain all required certificates of coverage for the duration of the project and for one (1) year thereafter.

28.7 The Contractor shall notify the governmental entity in writing by certified mail or personal delivery, within ten (10) days after the contractor knew or should have known, of any change that materially affects the provision of coverage of any person providing services on the project.

28.8 The Contractor shall post on each project site a notice, in the text, form and manner prescribed by the Texas Department of Workers' Compensation, informing all persons providing services on the project that they are required to be covered, and stating how a person may verify coverage and report lack of coverage.

28.9 The Contractor shall contractually require each person with whom it contracts to provide services on a project to:

28.9.1 Provide coverage, based on reporting of classification codes and payroll amounts and filing of any coverage agreements, which meets the statutory requirements of Texas Labor Code, Section 401.011(44) for all its employees providing services on the project, for the duration of the project.

28.9.2 Provide to the Contractor, prior to that person beginning work on the project a certificate of coverage showing that coverage is being provided for all employees of the person providing services on the project, for the duration of the project.

28.9.3 Provide the Contractor, prior to the end of coverage period, a new certificate of coverage showing extension of coverage, if the coverage period shown on the current certificate of coverage ends during the duration of the project.

28.9.4 Obtain from each person with whom it contracts, and provide to the Contractor:

28.9.4.1 A certificate of coverage, prior to the other person beginning work on the project; and

28.9.4.2 the coverage period, if the coverage period shown on the current certificate of a new certificate of coverage showing extension of coverage, prior to the end of coverage ends during the duration of the project.

28.9.5 Retain all required certificates of coverage on file for the duration of the project and for one (1) year thereafter.

28.9.6 Notify the governmental entity in writing by certified mail or personal delivery, within ten (10) days after the person knew or should have known, of any change that materially affects the provision of coverage of any person providing services on the project; and

28.9.7 Contractually require each person with whom it contracts to perform as required by paragraphs 28.1. – 28.7., with the certificates of coverage to be provided to the person for whom they are providing services.

28.10 By signing this contract or providing or causing to be provided a certificate of coverage, the Contractor is representing to the governmental entity that all employees of the contractor who will provide services of the project will be covered by workers' compensation coverage for the duration of the project, that the coverage will be based on proper reporting of classification codes and payroll amounts, and that all coverage agreements will be filed with the appropriate insurance carrier or, in the case of a self-insured, with the commission's Division of Self-Insurance Regulation. Providing false or misleading information may subject the contractor to administrative penalties, criminal penalties, civil penalties, or other civil actions.

28.11 The Contractor's failure to comply with any of these provisions is a breach of contract by the Contractor which entitles the governmental entity to declare the contract void if the Contractor does not remedy the breach within ten (10) days after receipt of notice of breach from the governmental entity.

29. Warranty of Title

29.1 No material, supplies, or equipment to be installed or furnished under this Contract shall be purchased subject to any chattel mortgage or under a conditional sale, lease-purchase or other agreement by which an interest s retained by the seller or supplier. The Contractor shall warrant good title to all materials, supplies, and equipment installed or incorporated in the work and upon completion of all work, shall deliver the same together with all improvements and appurtenances constructed or placed by him to the Owner free from any claims, liens, or charges. Neither the Contractor nor any person, firm, or corporation furnishing any material or labor for any work covered by this Contract shall have any right to a lien upon any improvement or appurtenance. Nothing contained in this paragraph, however, shall defeat or impair the right of persons furnishing materials or labor to recover under any law permitting such persons to look to funds due the Contractor in the hands of the Owner. The provisions of this paragraph shall be inserted in all subcontracts and material contracts and notice of its provisions shall be given to all persons furnishing materials for the work when no formal contract is entered into for such materials.

30. Warranty of Workmanship and Materials

30.1 Neither the final certificate of payment nor any provision in the Contract nor partial or entire use of the improvements included in this Contract by the Owner or the public shall constitute an acceptance of work not done in accordance with the Contract or relieve the Contractor of liability in respect to any express warranties or responsibility for faulty materials or workmanship. The Contractor shall promptly remedy any defects in the work and pay for any damage to other work resulting therefrom which shall appear within a period of twelve (12) months from the date of final acceptance of the work.

31. Compliance with Air and Water Acts

31.1 In compliance with the Clean Air Act, as amended, 41 U.S.C. Sec. 7401 et. seq., and the regulations of the Environmental Protection Agency with respect thereto, the Contractor agrees that:

31.1.1 Any facility to be utilized in the performance of this contract or any subcontract shall not be a facility listed on the EPA List of Violating Facilities pursuant to 40 CFR 15.20.

31.1.2 He will comply with all requirements of Section 114 of the Clean Air Act, as amended.

31.1.3 Materials utilized in the project shall be free of any hazardous materials, except as may be specifically provided for in the specifications.

31.2 If the Contractor encounters existing material on sites owned or controlled by the Owner or in material sources that are suspected by visual observation or smell to contain hazardous materials, the Contractor shall immediately notify the Engineer and the Owner. The Owner will be responsible for testing for and removal or disposition of hazardous materials on sites owned or controlled by the Owner. The Owner may suspend the work, wholly or in part during the testing, removal or disposition of hazardous materials on sites owned or controlled by the Owner.

32. Equal Employment Opportunity

32.2 The Contractor will, in all solicitations or advertisements for employees placed by or on behalf of the Contractor, state that all qualified applicants will receive consideration for employment without regard to race, color, religion, sex, or national origin.

32.3 The Contractor will cause the foregoing provisions to be inserted in all subcontracts for any work covered by this contract so that such provisions will be binding upon each subcontractor, provided that the foregoing provisions shall not apply to contracts or subcontracts for standard commercial supplies or raw materials.

32.4 The Contractor shall take affirmative actions to ensure equal employment opportunity. The evaluation of the Contractor's compliance with these specifications shall be based upon its effort to achieve maximum results from its actions.

32.5 Contractors are encouraged to participate in voluntary associations which assist in fulfilling their affirmative action obligations.

32.6 The Contractor is required to provide equal employment opportunity and to take affirmative action for all minority groups, both male and female, and all women, both minority and non-minority.

32.7 The Contractor shall not use the affirmative action standards to discriminate against any person because of race, color, religion, sex, or national origin.

SAMPLE

32.8 The Contractor shall not enter into any Subcontract with any person or firm debarred from Government contracts.

32.9 Nothing herein provided shall be construed as a limitation upon the application of other laws which establish different standards of compliance or upon the application of requirements for the hiring of local or other area residents.

33. Affirmative Action for Workers with Disabilities

33.1 The Contractor will not discriminate against any employee or applicant for employment because of disability in regard to any position for which the employee or applicant for employment is qualified. The Contractor agrees to take affirmative action to employ, advance in employment and otherwise treat qualified individuals with disabilities without discrimination based upon their disability in all employment practices such as the following: employment, promotion, demotion or transfer, recruitment, advertising, layoff or termination, rates of pay or other forms of compensation, and selection for training, including apprenticeship.

34. Section 109 of the Housing and Community Development Act of 1974

34.1 No person in the United States shall on the ground of race, color, national origin, or sex be excluded from participation in, be denied the benefits of, or be subjected to discrimination under any program or activity funded in whole or in part with funds made available under this title.

35. The Provision of Local Training, Employment, and Business Opportunities

35.1 To the greatest extent feasible opportunities for training and employment be given lower income residents of the project area and contracts for work in connection with the project be awarded to business concerns which are located in, or owned in substantial part by persons residing in the area of the project.

35.2 The Contractor will include this clause in every subcontract for work in connection with the project.

36. Non-Segregated Facilities

36.1 The Contractor certifies that he does not and will not maintain or provide for his employees any segregated facilities at any of his establishments, and that he does not and will not permit his employees any segregated facilities at any of his establishments, or permit his employees to perform their services at any location, under his control, where segregated facilities are maintained. As used in this paragraph the term "segregated facilities" means any waiting rooms, work areas, rest rooms and washrooms, restaurants and other eating areas, time clocks, locker rooms and other storage or dressing areas, parking lots, drinking fountains, recreation or entertainment areas, transportation, and housing facilities provided for employees which are segregated by explicit directive or are in fact segregated on the basis of race, creed, color, or national origin, because of habit, local custom, or otherwise.

37. Job Offices

37.1 The Contractor and his subcontractors may maintain such office and storage facilities on the site as are necessary for the proper conduct of the work. These shall be located so as to cause no interference to any work to be performed on the site. The Owner shall be consulted with regard to locations.

37.2 Upon completion of the improvements, or as directed by the Owner, the Contractors shall remove all such temporary structures and facilities from the site, and leave the site of the work in the condition required by the Contract.

38. Partial Use of Site Improvements

38.1 The Owner may give notice to the Contractor and place in use those sections of the improvements which have been completed, inspected and can be accepted as complying with the technical specifications and if in its opinion, each such section is reasonably safe, fit, and convenient for the use and accommodation for which it was intended, provided:

38.1.1 The use of such sections of the Improvements shall in no way impede the completion of the remainder of the work by the Contractor.

38.1.2 The Contractor shall not be responsible for any damages or maintenance costs due directly to the use of such sections.

38.1.3 The period of guarantee stipulated in the Section 29 hereof shall not begin to run until the date of the final acceptance of all work which the Contractor is required to construct under this Contract.

39. Contract Documents and Drawings

39.1 The Local Public Agency will furnish the Contractor without charge one (1) copy of the Contract Documents, including Technical Specifications and Drawings. Additional copies requested by the Contractor will be furnished at cost.

40. Contract Period

40.1 The work to be performed under this contract shall commence within the time stipulated by the Owner in the Notice to Proceed, and shall be fully completed within _____ calendar days thereafter.

41. Liquidated Damages

41.1 Since the actual damages for any delay in completion of the work under this contract are impossible to determine, the Contractor and his Sureties shall be liable for and shall pay to the Owner the sum of Five Hundred Dollars ($500.00) as fixed, agreed and liquidated damages for each calendar day of delay from the above stipulated time for completion.

SAMPLE

Federal Labor Standards Provisions

U.S. Department of Housing and Urban Development
Office of Labor Relations

Applicability

The Project or Program to which the construction work covered by this contract pertains is being assisted by the United States of America and the following Federal Labor Standards Provisions are included in this Contract pursuant to the provisions applicable to such Federal assistance.

A. 1. (i) Minimum Wages. All laborers and mechanics employed or working upon the site of the work, will be paid unconditionally and not less often than once a week, and without subsequent deduction or rebate on any account (except such payroll deductions as are permitted by regulations issued by the Secretary of Labor under the Copeland Act (29 CFR Part 3), the full amount of wages and bona fide fringe benefits (or cash equivalents thereof) due at time of payment computed at rates not less than those contained in the wage determination of the Secretary of Labor which is attached hereto and made a part hereof, regardless of any contractual relationship which may be alleged to exist between the contractor and such laborers and mechanics. Contributions made or costs reasonably anticipated for bona fide fringe benefits under Section l(b)(2) of the Davis-Bacon Act on behalf of laborers or mechanics are considered wages paid to such laborers or mechanics, subject to the provisions of 29 CFR 5.5(a)(1)(iv); also, regular contributions made or costs incurred for more than a weekly period (but not less often than quarterly) under plans, funds, or programs, which cover the particular weekly period, are deemed to be constructively made or incurred during such weekly period.

Such laborers and mechanics shall be paid the appropriate wage rate and fringe benefits on the wage determination for the classification of work actually performed, without regard to skill, except as provided in 29 CFR 5.5(a)(4). Laborers or mechanics performing work in more than one classification may be compensated at the rate specified for each classification for the time actually worked therein: Provided, That the employer's payroll records accurately set forth the time spent in each classification in which work is performed. The wage determination (including any additional classification and wage rates conformed under 29 CFR 5.5(a)(1)(ii) and the Davis-Bacon poster (WH-1321) shall be posted at all times by the contractor and its subcontractors at the site of the work in a prominent and accessible, place where it can be easily seen by the workers.

(ii) (a) Any class of laborers or mechanics which is not listed in the wage determination and which is to be employed under the contract shall be classified in conformance with the wage determination. HUD shall approve an additional classification and wage rate and fringe benefits therefor only when the following criteria have been met:

(1) The work to be performed by the classification requested is not performed by a classification in the wage determination; and

(2) The classification is utilized in the area by the construction industry; and

(3) The proposed wage rate, including any bona fide fringe benefits, bears a reasonable relationship to the wage rates contained in the wage determination.

(b) If the contractor and the laborers and mechanics to be employed in the classification (if known), or their representatives, and HUD or its designee agree on the classification and wage rate (including the amount designated for fringe benefits where appropriate), a report of the action taken shall be sent by HUD or its designee to the Administrator of the Wage and Hour Division, Employment Standards Administration, U.S. Department of Labor, Washington, D.C. 20210. The Administrator, or an authorized representative, will approve, modify, or disapprove every additional classification action within 30 days of receipt and so advise HUD or its designee or will notify HUD or its designee within the 30-day period that additional time is necessary. (Approved by the Office of Management and Budget under OMB control number 1215-0140.)

(c) In the event the contractor, the laborers or mechanics to be employed in the classification or their representatives, and HUD or its designee do not agree on the proposed classification and wage rate (including the amount designated for fringe benefits, where appropriate), HUD or its designee shall refer the questions, including the views of all interested parties and the recommendation of HUD or its designee, to the Administrator for determination. The Administrator, or an authorized representative, will issue a determination within 30 days of receipt and so advise HUD or its designee or will notify HUD or its designee within the 30-day period that additional time is necessary. (Approved by the Office of Management and Budget under OMB Control Number 1215-0140.)

(d) The wage rate (including fringe benefits where appropriate) determined pursuant to subparagraphs (1)(ii)(b) or (c) of this paragraph, shall be paid to all workers performing work in the classification under this contract from the first day on which work is performed in the classification.

(iii) Whenever the minimum wage rate prescribed in the contract for a class of laborers or mechanics includes a fringe benefit which is not expressed as an hourly rate, the contractor shall either pay the benefit as stated in the wage determination or shall pay another bona fide fringe benefit or an hourly cash equivalent thereof.

(iv) If the contractor does not make payments to a trustee or other third person, the contractor may consider as part

of the wages of any laborer or mechanic the amount of any costs reasonably anticipated in providing bona fide fringe benefits under a plan or program, Provided, That the Secretary of Labor has found, upon the written request of the contractor, that the applicable standards of the Davis-Bacon Act have been met. The Secretary of Labor may require the contractor to set aside in a separate account assets for the meeting of obligations under the plan or program. (Approved by the Office of Management and Budget under OMB Control Number 1215-0140.)

2. Withholding. HUD or its designee shall upon its own action or upon written request of an authorized representative of the Department of Labor withhold or cause to be withheld from the contractor under this contract or any other Federal contract with the same prime contractor, or any other Federally-assisted contract subject to Davis-Bacon prevailing wage requirements, which is held by the same prime contractor so much of the accrued payments or advances as may be considered necessary to pay laborers and mechanics, including apprentices, trainees and helpers, employed by the contractor or any subcontractor the full amount of wages required by the contract In the event of failure to pay any laborer or mechanic, including any apprentice, trainee or helper, employed or working on the site of the work, all or part of the wages required by the contract, HUD or its designee may, after written notice to the contractor, sponsor, applicant, or owner, take such action as may be necessary to cause the suspension of any further payment, advance, or guarantee of funds until such violations have ceased. HUD or its designee may, after written notice to the contractor, disburse such amounts withheld for and on account of the contractor or subcontractor to the respective employees to whom they are due. The Comptroller General shall make such disbursements in the case of direct Davis-Bacon Act contracts.

3. (i) Payrolls and basic records. Payrolls and basic records relating thereto shall be maintained by the contractor during the course of the work preserved for a period of three years thereafter for all laborers and mechanics working at the site of the work. Such records shall contain the name, address, and social security number of each such worker, his or her correct classification, hourly rates of wages paid (including rates of contributions or costs anticipated for bona fide fringe benefits or cash equivalents thereof of the types described in Section l(b)(2)(B) of the Davis-bacon Act), daily and weekly number of hours worked, deductions made and actual wages paid. Whenever the Secretary of Labor has found under 29 CFR 5.5 (a)(1)(iv) that the wages of any laborer or mechanic include the amount of any costs reasonably anticipated in providing benefits under a plan or program described in Section l(b)(2)(B) of the Davis-Bacon Act, the contractor shall maintain records which show that the commitment to provide such benefits is enforceable, that the plan or program is financially responsible, and that the plan or program has been communicated in writing to the laborers or mechanics affected, and records which show the costs anticipated or the actual cost incurred in providing such benefits. Contractors employing apprentices or trainees under approved programs shall maintain written evidence of the registration of apprenticeship programs and certification of trainee programs, the registration of the apprentices and trainees, and the ratios and wage rates prescribed in the applicable programs. (Approved by the Office of Management and Budget under OMB Control Numbers 1215-0140 and 1215-0017.)

(ii) (a) The contractor shall submit weekly for each week in which any contract work is performed a copy of all payrolls to HUD or its designee if the agency is a party to the contract, but if the agency is not such a party, the contractor will submit the payrolls to the applicant sponsor, or owner, as the case may be, for transmission to HUD or its designee. The payrolls submitted shall set out accurately and completely all of the information required to be maintained under 29 CFR 5.5(a)(3)(i) except that full social security numbers and home addresses shall not be included on weekly transmittals. Instead the payrolls shall only need to include an individually identifying number for each employee (e.g., the last four digits of the employee's social security number). The required weekly payroll information may be submitted in any form desired. Optional Form WH-347 is available for this purpose from the Wage and Hour Division Web site at http://www.dol.gov/esa/whd/forms/wh347instr.htm or its successor site. The prime contractor is responsible for the submission of copies of payrolls by all subcontractors. Contractors and subcontractors shall maintain the full social security number and current address of each covered worker, and shall provide them upon request to HUD or its designee if the agency is a party to the contract, but if the agency is not such a party, the contractor will submit the payrolls to the applicant sponsor, or owner, as the case may be, for transmission to HUD or its designee, the contractor, or the Wage and Hour Division of the Department of Labor for purposes of an investigation or audit of compliance with prevailing wage requirements. It is not a violation of this subparagraph for a prime contractor to require a subcontractor to provide addresses and social security numbers to the prime contractor for its own records, without weekly submission to HUD or its designee. (Approved by the Office of Management and Budget under OMB Control Number 1215-0149.)

(b) Each payroll submitted shall be accompanied by a "Statement of Compliance," signed by the contractor or subcontractor or his or her agent who pays or supervises the payment of the persons employed under the contract and shall certify the following:

(1) That the payroll for the payroll period contains the information required to be provided under 29 CFR 5.5 (a)(3)(ii), the appropriate information is being maintained under 29 CFR 5.5(a)(3)(i), and that such information is correct and complete;

(2) That each laborer or mechanic (including each helper, apprentice, and trainee) employed on the contract during the payroll period has been paid the full weekly wages earned, without rebate, either directly or indirectly, and that no deductions have been made either directly or indirectly from the full wages earned, other than permissible deductions as set forth in 29 CFR Part 3;

(3) That each laborer or mechanic has been paid not less than the applicable wage rates and fringe benefits or cash equivalents for the classification of work performed, as specified in the applicable wage determination incorporated into the contract.

(c) The weekly submission of a properly executed certification set forth on the reverse side of Optional Form WH-347 shall satisfy the requirement for submission of the "Statement of Compliance" required by subparagraph A.3.(ii)(b).

(d) The falsification of any of the above certifications may subject the contractor or subcontractor to civil or criminal prosecution under Section 1001 of Title 18 and Section 231 of Title 31 of the United States Code.

(iii) The contractor or subcontractor shall make the records required under subparagraph A.3.(i) available for inspection, copying, or transcription by authorized representatives of HUD or its designee or the Department of Labor, and shall permit such representatives to interview employees during working hours on the job. If the contractor or subcontractor fails to submit the required records or to make them available, HUD or its designee may, after written notice to the contractor, sponsor, applicant or owner, take such action as may be necessary to cause the suspension of any further payment, advance, or guarantee of funds. Furthermore, failure to submit the required records upon request or to make such records available may be grounds for debarment action pursuant to 29 CFR 5.12.

4. Apprentices and Trainees.

(i) Apprentices. Apprentices will be permitted to work at less than the predetermined rate for the work they performed when they are employed pursuant to and individually registered in a bona fide apprenticeship program registered with the U.S. Department of Labor, Employment and Training Administration, Office of Apprenticeship Training, Employer and Labor Services, or with a State Apprenticeship Agency recognized by the Office, or if a person is employed in his or her first 90 days of probationary employment as an apprentice in such an apprenticeship program, who is not individually registered in the program, but who has been certified by the Office of Apprenticeship Training, Employer and Labor Services or a State Apprenticeship Agency (where appropriate) to be eligible for probationary employment as an apprentice. The allowable ratio of apprentices to journeymen on the job site in any craft classification shall not be greater than the ratio permitted to the contractor as to the entire work force under the registered program. Any worker listed on a payroll at an apprentice wage rate, who is not registered or otherwise employed as stated above, shall be paid not less than the applicable wage rate on the wage determination for the classification of work actually performed. In addition, any apprentice performing work on the job site in excess of the ratio permitted under the registered program shall be paid not less than the applicable wage rate on the wage determination for the work actually performed. Where a contractor is performing construction on a project in a locality other than that in which its program is registered, the ratios and wage rates (expressed in percentages of the journeyman's hourly rate) specified in the contractor's or subcontractor's registered program shall be observed. Every apprentice must be paid at not less than the rate specified in the registered program for the apprentice's level of progress, expressed as a percentage of the journeymen hourly rate specified in the applicable wage determination. Apprentices shall be paid fringe benefits in accordance with the provisions of the apprenticeship program. If the apprenticeship program does not specify fringe benefits, apprentices must be paid the full amount of fringe benefits listed on the wage determination for the applicable classification. If the Administrator determines that a different practice prevails for the applicable apprentice classification, fringes shall be paid in accordance with that determination. In the event the Office of Apprenticeship Training, Employer and Labor Services, or a State Apprenticeship Agency recognized by the Office, withdraws approval of an apprenticeship program, the contractor will no longer be permitted to utilize apprentices at less than the applicable predetermined rate for the work performed until an acceptable program is approved.

(ii) Trainees. Except as provided in 29 CFR 5.16, trainees will not be permitted to work at less than the predetermined rate for the work performed unless they are employed pursuant ',to and individually registered in a program which has received prior approval, evidenced by formal certification by the U.S. Department of Labor, Employment and Training Administration. The ratio of trainees to journeymen on the job site shall not be greater than permitted under the plan approved by the Employment and Training Administration. Every trainee must be paid at not less than the rate specified in the approved program for the trainee's level of progress, expressed as a percentage of the journeyman hourly rate specified in the applicable wage determination. Trainees shall be paid fringe benefits in accordance with the provisions of the trainee program. If the trainee program does not mention fringe benefits, trainees shall be paid the full amount of fringe benefits listed on the wage determination unless the Administrator of the Wage and Hour Division determines that there is an apprenticeship program associated with the corresponding journeyman wage rate on the wage determination which provides for less than full fringe benefits for apprentices. Any employee listed on the payroll at a trainee rate who is not registered and participating in a training plan approved by

the Employment and Training Administration shall be paid not less than the applicable wage rate on the wage determination for the work actually performed. In addition, any trainee performing work on the job site in excess of the ratio permitted under the registered program shall be paid not less than the applicable wage rate on the wage determination for the work actually performed. In the event the Employment and Training Administration withdraws approval of a training program, the contractor will no longer be permitted to utilize trainees at less than the applicable predetermined rate for the work performed until an acceptable program is approved.

(iii) Equal employment opportunity. The utilization of apprentices, trainees and journeymen under 29 CFR Part 5 shall be in conformity with the equal employment opportunity requirements of Executive Order 11246, as amended, and 29 CFR Part 30.

5. Compliance with Copeland Act requirements. The contractor shall comply with the requirements of 29 CFR Part 3 which are incorporated by reference in this contract

6. Subcontracts. The contractor or subcontractor will insert in any subcontracts the clauses contained in subparagraphs 1 through 11 in this paragraph A and such other clauses as HUD or its designee may by appropriate instructions require, and a copy of the applicable prevailing wage decision, and also a clause requiring the subcontractors to include these clauses in any lower tier subcontracts. The prime contractor shall be responsible for the compliance by any subcontractor or lower tier subcontractor with all the contract clauses in this paragraph.

7. Contract termination; debarment. A breach of the contract clauses in 29 CFR 5.5 may be grounds for termination of the contract and for debarment as a contractor and a subcontractor as provided in 29 CFR 5.12.

8. Compliance with Davis-Bacon and Related Act Requirements. All rulings and interpretations of the Davis-Bacon and Related Acts contained in 29 CFR Parts 1, 3, and 5 are herein incorporated by reference in this contract

9. Disputes concerning labor standards. Disputes arising out of the labor standards provisions of this contract shall not be subject to the general disputes clause of this contract. Such disputes shall be resolved in accordance with the procedures of the Department of Labor set forth in 29 CFR Parts 5, 6, and 7. Disputes within the meaning of this clause include disputes between the contractor (or any of its subcontractors) and HUD or its designee, the U.S. Department of Labor, or the employees or their representatives.

10. (i) Certification of Eligibility. By entering into this contract the contractor certifies that neither it (nor he or she) nor any person or firm who has an interest in the contractor's firm is a person or firm ineligible to be awarded Government contracts by virtue of Section 3(a) of the Davis-Bacon Act or 29 CFR 5.12(a)(1) or to be awarded HUD contracts or participate in HUD programs pursuant to 24 CFR Part 24.

(ii) No part of this contract shall be subcontracted to any person or firm ineligible for award of a Government contract by virtue of Section 3(a) of the Davis-Bacon Act or 29 CFR 5.12(a)(1) or to be awarded HUD contracts or participate in HUD programs pursuant to 24 CFR Part 24.

(iii) The penalty for making false statements is prescribed in the U.S. Criminal Code, 18 U.S.C. 1001. Additionally, U.S. Criminal Code, Section 1 01 0, Title 18, U.S.C., "Federal Housing Administration transactions", provides in part: "Whoever, for the purpose of . . . influencing in any way the action of such Administration..... makes, utters or publishes any statement knowing the same to be false..... shall be fined not more than $5,000 or imprisoned not more than two years, or both."

11. Complaints, Proceedings, or Testimony by Employees. No laborer or mechanic to whom the wage, salary, or other labor standards provisions of this Contract are applicable shall be discharged or in any other manner discriminated against by the Contractor or any subcontractor because such employee has filed any complaint or instituted or caused to be instituted any proceeding or has testified or is about to testify in any proceeding under or relating to the labor standards applicable under this Contract to his employer.

B. Contract Work Hours and Safety Standards Act. The provisions of this paragraph B are applicable where the amount of the prime contract exceeds $100,000. As used in this paragraph, the terms "laborers" and "mechanics" include watchmen and guards.

(1) Overtime requirements. No contractor or subcontractor contracting for any part of the contract work which may require or involve the employment of laborers or mechanics shall require or permit any such laborer or mechanic in any workweek in which the individual is employed on such work to work in excess of 40 hours in such workweek unless such laborer or mechanic receives compensation at a rate not less than one and one-half times the basic rate of pay for all hours worked in excess of 40 hours in such workweek.

(2) Violation; liability for unpaid wages; liquidated damages. In the event of any violation of the clause set forth in subparagraph (1) of this paragraph, the contractor and any subcontractor responsible therefor shall be liable for the unpaid wages. In addition, such contractor and subcontractor shall be liable to the United States (in the case of work done under contract for the District of Columbia or a territory, to such District or to such territory), for liquidated damages. Such liquidated damages shall be computed with respect to each individual laborer or mechanic, including watchmen and guards, employed in violation of the clause set forth in subparagraph (1) of this paragraph, in the sum of $10 for each calendar day on which such individual was required or permitted to work in excess of the standard workweek of 40 hours without payment of the overtime wages required by the clause set forth in sub paragraph (1) of this paragraph.

(3) Withholding for unpaid wages and liquidated damages. HUD or its designee shall upon its own action or upon written request of an authorized representative of the Department of Labor withhold or cause to be withheld, from any moneys payable on account of work performed by the contractor or subcontractor under any such contract or any other Federal contract with the same prime contract, or any other Federally-assisted contract subject to the Contract Work Hours and Safety Standards Act which is held by the same prime contractor such sums as may be determined to be necessary to satisfy any liabilities of such contractor or subcontractor for unpaid wages and liquidated damages as provided in the clause set forth in subparagraph (2) of this paragraph.

(4) Subcontracts. The contractor or subcontractor shall insert in any subcontracts the clauses set forth in subparagraph (1) through (4) of this paragraph and also a clause requiring the subcontractors to include these clauses in any lower tier subcontracts. The prime contractor shall be responsible for compliance by any subcontractor or lower tier subcontractor with the clauses set forth in subparagraphs (1) through (4) of this paragraph.

C. Health and Safety. The provisions of this paragraph C are applicable where the amount of the prime contract exceeds $100,000.

(1) No laborer or mechanic shall be required to work in surroundings or under working conditions which are unsanitary, hazardous, or dangerous to his health and safety as determined under construction safety and health standards promulgated by the Secretary of Labor by regulation.

(2) The Contractor shall comply with all regulations issued by the Secretary of Labor pursuant to Title 29 Part 1926 and failure to comply may result in imposition of sanctions pursuant to the Contract Work Hours and Safety Standards Act, (Public Law 91-54, 83 Stat 96). 40 USC 3701 et seq.

(3) The contractor shall include the provisions of this paragraph in every subcontract so that such provisions will be binding on each subcontractor. The contractor shall take such action with respect to any subcontractor as the Secretary of Housing and Urban Development or the Secretary of Labor shall direct as a means of enforcing such provisions.

CONTRACTOR CERTIFICATIONS

U.S. Department of Housing and Urban Development

CERTIFICATION OF BIDDER REGARDING CIVIL RIGHTS LAWS AND REGULATIONS

INSTRUCTIONS

CERTIFICATION OF BIDDER REGARDING Executive Order 11246 and Federal Laws Requiring Federal Contractor to adopt and abide by equal employment opportunity and affirmative action in their hiring, firing, and promotion practices. This includes practices related to race, color, gender, religion, national origin, disability, and veterans' rights.

NAME AND ADDRESS OF BIDDER (include ZIP Code)

CERTIFICATION BY BIDDER

Bidder has participated in a previous contract or subcontract subject to Civil Rights Laws and Regulations.

☐ Yes ☐ No

The undersigned hereby certifies that:

☐ The Provision of Local Training, Employment, and Business Opportunities clause (Section 3 provision) is included in the Contract. A written Section 3 plan (Local Opportunity Plan) was prepared and submitted as part of the bid proceedings (if bid equals or exceeds $100,000).

☐ The Equal Opportunity clause is included in the Contract (if bid equals or exceeds $10,000).

Have you ever been or are you being considered for sanction due to violation of Executive Order 11246, as amended?

☐ Yes ☐ No

NAME AND TITLE OF SIGNER (Please type)

SIGNATURE DATE

Bidder Shall Return Completed Form with Offer.

SECTION 504 CERTIFICATION

POLICY OF NONDISCRIMINATION
ON THE BASIS OF DISABILITY

The _____ does not discriminate on the basis of disability in the admission or access to, or treatment or employment in, its federally assisted programs or activities.

(Name) _____

(Address) _____

_____
City State Zip

Telephone Number ( ) _____ - _____ Voice
( ) _____ - _____ TDD

has been designated to coordinate compliance with the nondiscrimination requirements contained in the Department of Housing and Urban Development's (HUD) regulations implementing Section 504 (24 CFR Part 8. dated June 2, 1988).

Bidder Shall Return Completed Form with Offer.

American Recovery and Reinvestment Act
Port Security Grant Program (ARRA PSGP)
Contractor's Certification Concerning
Labor Standards and Prevailing Wage Requirements

TO (appropriate recipient)	DATE
	PROJECT NUMBER (if any)
C/O	PROJECT NAME

1. The undersigned, having executed a contract with _____ _____ for the construction of the above-identified project, acknowledges that:

   (a) The Labor Standards provisions are included in the aforesaid contract,

   (b) Correction of any infractions of the aforesaid conditions, including infractions by any of his subcontractors and any lower tier subcontractors, is his responsibility.

2. He certifies that:

   (a) Neither he nor any firm, partnership or association in which he has substantial interest is designated as an ineligible contractor by the Comptroller General of the United States pursuant to Section 5.6(b) of the Regulations of the Secretary of Labor, Part 5 (29 CFR, Part 5) or pursuant to Section 3(a) of the Davis-Bacon Act, as amended.

   (b) No part of the aforementioned contract has been or will be subcontracted to any subcontractor if such subcontractor or any firm, corporation, partnership or association in which such subcontractor has a substantial interest is designated as an ineligible contractor pursuant to any of the aforementioned regulatory or statutory provisions.

3. He agrees to obtain and forward to the aforementioned recipient within ten days after the execution of any subcontract, including those executed by his subcontractors and any lower tier subcontractors, a Subcontractor's Certification Concerning Labor Standards and Prevailing Wage Requirements executed by the subcontractors.

4. He certifies that:

   (a) The legal name and the business address of the undersigned are:

   (b) The undersigned is:

(1) A SINGLE PROPRIETORSHIP	(3) A CORPORATION ORGANIZED IN THE STATE OF
(2) A PARTNERSHIP	(4) OTHER ORGANIZATION (Describe)

   (c) The name, title and address of the owner, partners or officers of the undersigned are:

NAME	TITLE	ADDRESS

(d) The names and addresses of all other persons having a substantial interest in the undersigned, and the nature of the interest are:

NAME	ADDRESS	NATURE OF INTEREST

(e) The names, addresses and trade classifications of all other building construction contractors in which the undersigned has a substantial interest are:

NAME	ADDRESS	TRADE CLASSIFICATION

_____
(Contractor)

Date _____

By _____

This Form to Be Completed Following Bid Award.

Conflict of Interest Questionnaire

CONFLICT OF INTEREST QUESTIONNAIRE — FORM CIQ

For vendor doing business with local governmental entity

This questionnaire reflects changes made to the law by H.B. 23, 84th Leg., Regular Session.

This questionnaire is being filed in accordance with Chapter 176, Local Government Code, by a vendor who has a business relationship as defined by Section 176.001(1-a) with a local governmental entity and the vendor meets requirements under Section 176.006(a).

By law this questionnaire must be filed with the records administrator of the local governmental entity not later than the 7th business day after the date the vendor becomes aware of facts that require the statement to be filed. *See* Section 176.006(a-1), Local Government Code.

A vendor commits an offense if the vendor knowingly violates Section 176.006, Local Government Code. An offense under this section is a misdemeanor.

OFFICE USE ONLY
Date Received

1 **Name of vendor who has a business relationship with local governmental entity.**

2 ☐ **Check this box if you are filing an update to a previously filed questionnaire.**

(The law requires that you file an updated completed questionnaire with the appropriate filing authority not later than the 7th business day after the date on which you became aware that the originally filed questionnaire was incomplete or inaccurate.)

3 **Name of local government officer about whom the information in this section is being disclosed.**

_____
Name of Officer

This section (item 3 including subparts A, B, C, & D) must be completed for each officer with whom the vendor has an employment or other business relationship as defined by Section 176.001(1-a), Local Government Code. Attach additional pages to this Form CIQ as necessary.

A. Is the local government officer named in this section receiving or likely to receive taxable income, other than investment income, from the vendor?

☐ Yes ☐ No

B. Is the vendor receiving or likely to receive taxable income, other than investment income, from or at the direction of the local government officer named in this section AND the taxable income is not received from the local governmental entity?

☐ Yes ☐ No

C. Is the filer of this questionnaire employed by a corporation or other business entity with respect to which the local government officer serves as an officer or director, or holds an ownership interest of one percent or more?

☐ Yes ☐ No

D. Describe each employment or business and family relationship with the local government officer named in this section.

4

_____ _____
Signature of vendor doing business with the governmental entity Date

Adopted 8/7/2015

Bidder Shall Return Completed Form with Offer.

Local Government Officer
Conflicts Disclosure Statement - OFFICE USE ONLY

LOCAL GOVERNMENT OFFICER CONFLICTS DISCLOSURE STATEMENT

FORM CIS

This questionnaire reflects changes made to the law by H.B. 23, 84th Leg., Regular Session.

This is the notice to the appropriate local governmental entity that the following local government officer has become aware of facts that require the officer to file this statement in accordance with Chapter 176, Local Government Code.

OFFICE USE ONLY

Date Received

1 **Name of Local Government Officer**

2 **Office Held**

3 **Name of vendor described by Sections 176.001(7) and 176.003(a), Local Government Code**

4 **Description of the nature and extent of employment or other business relationship with vendor named in item 3**

5 **List gifts accepted by the local government officer and any family member, if aggregate value of the gifts accepted from vendor named in item 3 exceeds $100 during the 12-month period described by Section 176.003(a)(2)(B).**

Date Gift Accepted _____ Description of Gift _____

Date Gift Accepted _____ Description of Gift _____

Date Gift Accepted _____ Description of Gift _____

(attach additional forms as necessary)

6 **AFFIDAVIT**

I swear under penalty of perjury that the above statement is true and correct. I acknowledge that the disclosure applies to each family member (as defined by Section 176.001(2), Local Government Code) of this local government officer. I also acknowledge that this statement covers the 12-month period described by Section 176.003(a)(2)(B), Local Government Code.

_____
Signature of Local Government Officer

AFFIX NOTARY STAMP / SEAL ABOVE

Sworn to and subscribed before me, by the said _____, this the _____ day of _____, 20 _____, to certify which, witness my hand and seal of office.

_____ _____ _____
Signature of officer administering oath | Printed name of officer administering oath | Title of officer administering oath

Adopted 8/7/2015

Bidder Shall Return Form (For Office Use Only) with Offer.

Good Faith Effort (GFE) Determination Checklist

This information must be submitted with your bid.

Bidder intends to utilize subcontractors/subconsultants in the fulfillment of this contract (if awarded).
☐ Yes ☐ No

Instructions: In order to determine if a "Good Faith Effort" was made in soliciting HUBs for subcontracting opportunities, the following checklist and supporting documentation shall be completed by the Prime Contractor/Consultant, and returned with the Prime Contractor/ Consultant's bid. This list contains the **minimum** efforts that should be put forth by the Prime Contractor/Consultant when attempting to achieve or exceed the goals of HUB Subcontractor participation. The Prime Contractor/Consultant may extend his/her efforts in soliciting HUB Subcontractor participation beyond what is listed below.

Did the Prime Contractor/Consultant . . .

☐ Yes ☐ No 1. To the extent practical, and consistent with standard and prudent industry standards, divide the contract work into the smallest feasible portions, to allow for maximum HUB Subcontractor participation?

☐ Yes ☐ No 2. **Notify** in writing a reasonable number of HUBs, allowing sufficient time for effective participation of the planned work to be subcontracted?

☐ Yes ☐ No 3. **Provide** HUBs that were genuinely interested in bidding on a subcontractor, adequate information regarding the project (i.e., plans, specifications, scope of work, bonding and insurance requirements, and a point of contract within the Prime Contractor/Consultant's organization)?

☐ Yes ☐ No 4. **Negotiate** in good faith with interested HUBs, and not reject bids from HUBs that qualify as lowest and responsive bidders?

☐ Yes ☐ No 5. **Document** reasons HUBs were rejected? Was a written rejection notice, including the reason for rejection, provided to the rejected HUBs?

☐ Yes ☐ No 6. If Prime Contractor/Consultant has zero (0) HUB participation, **please explain the reasons why.**

If "No" was selected, please explain and include any pertinent documentation with your bid.
If necessary, please use a separate sheet to answer the above questions.

Printed Name of Authorized Representative	Signature
Title	Date

Bidder Shall Return Completed Form with Offer.

Notice of Intent (NOI) to Subcontract with Historically Underutilized Business (HUB)

This information must be submitted with your bid.

Bidder intends to utilize subcontractors/subconsultants in the fulfillment of this contract (if awarded).
☐ Yes ☐ No

Instructions for Prime Contractor/Consultant: Bidder shall submit this form with the bid; however, the information below may be submitted after contract award, but prior to beginning performance on the contract. Please submit one form for each HUB Subcontractor/Subconsultant with proper signatures, per the terms and conditions of your contract.

Contractor Name: _____ HUB: p Yes p No

Address: _____
Street City State Zip

Phone (with area code): _____ Fax (with area code): _____

Project Title & No.: _____

Prime Contract Amount: $ _____

HUB Subcontractor Name: _____

HUB Status (Gender & Ethnicity): _____

Certifying Agency: ☐ Tx. Bldg & Procurement Comm. ☐ Jefferson County ☐ Tx Unified Certification Prog.

Address: _____
Street City State Zip

Phone (with area code): _____ Fax (with area code): _____

Proposed Subcontract Amount: $ _____ Percentage of Prime Contract: _____ %

Description of Subcontract Work to be Performed: _____

_____

Printed Name of Contractor Representative	Signature of Representative	Date
Printed Name of HUB	Signature of Representative	Date

NOTE: NOTHING ON THIS NOTICE OF INTENT FORM IS INTENDED TO CONFER ANY RIGHTS, EXPRESSED OR IMPLIED, TO ANY THIRD PARTIES.

Pre-Approval for Subcontractor Substitutions must be obtained from the Jefferson County Purchasing Agent's Representative. The "HUB Subcontractor/Subconsultant Change Form" must be completed and faxed to 409-835-8456.

Bidder Shall Return Completed Form with Offer.

Historically Underutilized Business (HUB)
Subcontracting Participation Declaration Form

This information must be submitted with your bid.

Bidder intends to utilize subcontractors/subconsultants in the fulfillment of this contract (if awarded).
☐ Yes ☐ No

Prime Contractor: _____ HUB: ☐ Yes ☐ No

HUB Status (Gender & Ethnicity): _____

Address: _____
Street City State Zip

Phone (with area code): _____ Fax (with area code): _____

Project Title & No.: _____ IFB/RFP No.: _____

Total Contract: $ _____ Total HUB Subcontract(s): $ _____

Construction HUB Goals: 12.8% MBE:: _____ % 12.6% WBE: _____ %

Sub-goals: 1.7 African-American, 9.7% Hispanic, 0.7% Native American, 0.8% Asian American.
Use these goals as a guide to diversify.

FOR HUB OFFICE USE ONLY:

Verification date HUB Program Office reviewed and verified HUB Sub information Date: _____ Initials: _____

PART I. HUB SUCONTRACTOR DISCLOSURE

HUB Subcontractor Name: _____

HUB Status (Gender & Ethnicity): _____

Certifying Agency: ☐ Texas Bldg & Procurement Comm. ☐ Texas Unified Certification Prog.

Address: _____
Street City State Zip

Contact person: _____ Title: _____

Phone (with area code): _____ Fax (with area code): _____

Proposed Subcontract Amount: $ _____ Percentage of Prime Contract: _____ %

Description of Subcontract Work to be Performed: _____

Bidder Shall Return Completed Form with Offer.

Historically Underutilized Business (HUB)
Subcontracting Participation Declaration Form

HUB SUBCONTRACTOR DISCLOSURE

PART I: Continuation Sheet **(Duplicate as Needed)**

HUB Subcontractor Name: _____

HUB Status (Gender & Ethnicity): _____

Certifying Agency: ☐ Tx. Bldg & Procurement Comm. ☐ Jefferson County ☐ Tx Unified Certification Prog.

Address: _____
Street City State Zip

Contact person: _____ Title: _____

Phone (with area code): _____ Fax (with area code): _____

Proposed Subcontract Amount: $ _____ Percentage of Prime Contract: _____ %

Description of Subcontract Work to be Performed: _____

_____

HUB Subcontractor Name: _____

HUB Status (Gender & Ethnicity): _____

Certifying Agency: ☐ Tx. Bldg & Procurement Comm. ☐ Jefferson County ☐ Tx Unified Certification Prog.

Address: _____
Street City State Zip

Contact person: _____ Title: _____

Phone (with area code): _____ Fax (with area code): _____

Proposed Subcontract Amount: $ _____ Percentage of Prime Contract: _____ %

Description of Subcontract Work to be Performed: _____

_____

All HUB Subcontractor Participation may be verified with the HUB Subcontractor(s) listed on Part I.

Bidder Shall Return Completed Form with Offer.

Historically Underutilized Business (HUB)
Subcontracting Participation Declaration Form

PART II: STATEMENT OF NON-COMPLIANCE FOR NOT MEETING HUB SUBCONTRACTING GOALS

Please complete Good Faith Effort (GFE) Checklist and attach any supporting documentation.

Our firm was unable to meet the HUB goals for this project for the following reasons:

- ☐ All subcontractors to be utilized are "Non-HUBs." *(Complete Part III)*
- ☐ HUBs were solicited but did not respond.
- ☐ HUBs solicited were not competitive.
- ☐ HUBs were unavailable for the following trade(s):
- ☐ Other: _____

Was the Jefferson County HUB Office contacted for assistance in locating HUBs? ☐ Yes ☐ No

PART III: DISCLOSURE OF OTHER "NON-HUB" SUBCONTRACTS

The bidder shall use this area to provide a listing of all "Non-HUB" Subcontractors, including suppliers, that will perform under this project. A list of those "Non-HUB" Subcontractors the bidder selects, after bid submission, shall be provided to the Purchasing Office not later than five (5) calendar days after being notified that bidder is the apparent low bidder. A list of those "Non-HUB" Subcontractors that are selected after contract award must be provided **immediately** after their selection.

Subcontractor Name: _____

Address: _____
Street City State Zip

Contact person: _____ Title: _____

Phone (with area code): _____ Fax (with area code): _____

Proposed Subcontract Amount: $ _____ Percentage of Prime Contract: _____ %

Description of Subcontract Work to be Performed: _____

Subcontractor Name: _____

Address: _____
Street City State Zip

Contact person: _____ Title: _____

Phone (with area code): _____ Fax (with area code): _____

Proposed Subcontract Amount: $ _____ Percentage of Prime Contract: _____ %

Description of Subcontract Work to be Performed: _____

Bidder Shall Return Completed Form with Offer.

Historically Underutilized Business (HUB)
Subcontracting Participation Declaration Form

PAGE 4 OF 4

Subcontractor Name: _____

Address: _____
Street City State Zip

Contact person: _____ Title: _____

Phone (with area code): _____ Fax (with area code): _____

Proposed Subcontract Amount: $ _____ Percentage of Prime Contract: _____ %

Description of Subcontract Work to be Performed: _____

Subcontractor Name: _____

Address: _____
Street City State Zip

Contact person: _____ Title: _____

Phone (with area code): _____ Fax (with area code): _____

Proposed Subcontract Amount: $ _____ Percentage of Prime Contract: _____ %

Description of Subcontract Work to be Performed: _____

I hereby certify that I have read the *HUB Program Instructions and Information*, truthfully completed all applicable parts of this form, and **attached any necessary support documentation as required**. I fully understand that intentionally falsifying information on this document may result in my not receiving a contract award or termination of any resulting contract.

Name (print or type): _____

Title: _____

Signature: _____

Date: _____

E-mail address: _____

Contact person that will be in charge of invoicing for this project:

Name (print or type): _____

Title: _____

Date: _____

E-mail address: _____

Bidder Shall Return Completed Form with Offer.

Residence Certification/Tax Form

Pursuant to Texas Government Code §2252.001 *et seq*., as amended, Jefferson County requests Resident Certification. §2252.001 *et seq*. of the Government Code provides some restrictions on the awarding of governmental contracts; pertinent provisions of §2252.001 are stated below:

(3) "Nonresident bidder" refers to a person who is not a resident.

(4) "Resident bidder" refers to a person whose principal place of business is in this state, including a contractor whose ultimate parent company or majority owner has its principal place of business in this state.

☐ I certify that _____ [company name] is a Resident Bidder of Texas as defined in Government Code §2252.001.

☐ I certify that _____ [company name] is a Nonresident Bidder as defined in Government Code §2252.001 and our principal place of business is _____ _____ (city and state).

Taxpayer Identification Number (T.I.N.):	
Company Name submitting bid/proposal:	
Mailing address:	
If you are an individual, list the names and addresses of any partnership of which you are a general partner:	

Property: List all taxable property owned by you or above partnerships in Jefferson County.

Jefferson County Tax Acct. No.*	Property address or location**

* This is the property amount identification number assigned by the Jefferson County Appraisal District.

** For real property, specify the property address or legal description. For business property, specify the address where the property is located. For example, office equipment will normally be at your office, but inventory may be stored as a warehouse or other location.

Bidder Shall Return Completed Form with Offer.

Bid Affidavit

The undersigned certifies that the bid prices contained in this bid have been carefully reviewed and are submitted as correct and final. Bidder further certifies and agrees to furnish any and/or all commodities upon which prices are extended at the price offered, and upon the conditions contained in the specifications and the Notice to Bidders.

STATE OF_____ COUNTY OF_____

BEFORE ME, the undersigned authority, a Notary Public in and for the State of _____,

on this day personally appeared _____, who
(name)
after being by me duly sworn, did depose and say:

"I, _____ am a duly authorized officer of/agent
(name)
for _____ and have been duly authorized to execute the
(name of firm)
foregoing on behalf of the said_____.
(name of firm)

I hereby certify that the foregoing bid has not been prepared in collusion with any other bidder or other person or persons engaged in the same line of business prior to the official opening of this bid. Further, I certify that the bidder is not now, nor has been for the past six (6) months, directly or indirectly concerned in any pool or agreement or combination, to control the price of services/commodities bid on, or to influence any person or persons to bid or not to bid thereon."

Name and address of bidder:_____

_____

Fax: _____ Telephone#_____

by: _____ Title:_____
(print name)

Signature:_____

SUBSCRIBED AND SWORN to before me by the above-named
_____ on

this the _____ day of_____, 2017.

_____
Notary Public in and for
the State of _____

Bidder Shall Return Completed Form with Offer.

§ 135.38 Section 3 Clause.

All section 3 contracts shall include the following clause (referred to as the section 3 clause):

A. The work to be performed under this contract is subject to the requirements of section 3 of the Housing and Urban Development Act of 1968, as amended 12 U.S.C. 1701u (section 3). The purpose of section 3 is to ensure that employment and other economic opportunities generated by HUD assistance or HUD-assisted projects covered by section 3 shall, to the greatest extent feasible, be directed to low- and very low-income persons, particularly persons who are recipients of HUD assistance for housing.

B. The parties to this contract agree to comply with HUD's regulations in 24 CFR part 135, which implement section 3. As evidenced by their execution of this contract, the parties to this contract certify that they are under no contractual or other impediment that would prevent them from complying with the part 135 regulations.

C. The contractor agrees to send to each labor organization or representative of workers with which the contractor has a collective bargaining agreement or other understanding, if any, a notice advising the labor organization or workers' representative of the contractor's commitments under this section 3 clause, and will post copies of the notice in conspicuous places at the work site where both employees and applicants for training and employment positions can see the notice. The notice shall describe the section 3 preference, shall set forth minimum number and job titles subject to hire, availability of apprenticeship and training positions, the qualifications for each; and the name and location of the person(s) taking applications for each of the positions; and the anticipated date the work shall begin.

D. The contractor agrees to include this section 3 clause in every subcontract subject to compliance with regulations in 24 CFR part 135, and agrees to take appropriate action, as provided in an applicable provision of the subcontract or in this section 3 clause, upon a finding that the subcontractor is in violation of the regulations in 24 CFR part 135. The contractor will not subcontract with any subcontractor where the contractor has notice or knowledge that the subcontractor has been found in violation of the regulations in 24 CFR part 135.

E. The contractor will certify that any vacant employment positions, including training positions, that are filled (1) after the contractor is selected but before the contract is executed, and (2) with persons other than those to whom the regulations of 24 CFR part 135 require employment opportunities to be directed, were not filled to circumvent the contractor's obligations under 24 CFR part 135.

F. Noncompliance with HUD's regulations in 24 CFR part 135 may result in sanctions, termination of this contract for default, and debarment or suspension from future HUD assisted contracts.

G. With respect to work performed in connection with section 3 covered Indian housing assistance, section 7(b) of the Indian Self-Determination and Education Assistance Act (25U.S.C. 450e) also applies to the work to be performed under this contract. Section 7(b) requires that to the greatest extent feasible (1) preference and opportunities for training and employment shall be given to Indians, and (ii) preference in the award of contracts and subcontracts shall be given to Indian organizations and Indian-owned Economic Enterprises. Parties to this contract that are subject to the provisions of section 3 and section 7(b) agree to comply with section 3 to the maximum extent feasible, but not in derogation of compliance with section 7(b).

A1001

Equal Opportunity Guidelines for Construction Contractors

Note: To be included in bid packet and distributed at the preconstruction conference (optional)

1. **What are the responsibilities of the offeror or bidder to ensure equal employment opportunity?**
   For contracts over $ 10,000, the offeror or bidder must comply with the "Equal Opportunity Clause" and the "Standard Federal Equal Opportunity Construction Contract Specifications."

2. **Are construction contractors required to ensure a legal working environment for all employees?**
   Yes, it is the construction contractor's responsibility to provide an environment free of harassment, intimidation, and coercion to all employees and to notify all foremen and supervisors to carry out this obligation, with specific attention to minority or female individuals.

3. **To alleviate developing separate facilities for men and women on all sites, can a construction contractor place all women employees on one site?**
   No, two or more women should be assigned to each site when possible.

4. **Are construction contractors required to make special outreach efforts to Section 3 or minority and female recruitment sources?**
   Yes, construction contractors must establish a current list of Section 3, minority and female recruitment sources. Notification of employment opportunities, including the availability of on-the-job training and apprenticeship programs, should be given to these sources. The efforts of the construction contractors should be kept in file.

5. **Should records be maintained on the number of Section 3 residents, minority and females applying for positions with construction contractors?**
   Yes, records must be maintained to include a current list of names, addresses and telephone numbers of all Section 3, minority and female applicants. The documentation should also include the results of the applications submitted.

6. **What happens if a woman or minority is sent to the union by the Contractor and is not referred back to the Contractor for employment?**
   If the unions impede the construction contractor's responsibility to provide equal employment opportunity, a written notice should be submitted to TDA.

7. **What efforts are made by construction contractors to create entry-level positions for Section 3 residents, women and minorities?**
   Construction contractors are required to develop on-the-job training programs, or participate in training programs, especially those funded by the Department of Labor, to create positions for Section 3 residents, women and minorities and to meet employment needs.

8. **Are any efforts made by the Contractor to publicize their Equal Employment Opportunity (EEO) policy?**
   Yes, the construction contractor is responsible for notifying unions and sources of training programs of their equal employment opportunity policy. Unions should be requested to cooperate in the effort of equal opportunity. The policy should be included in any appropriate manuals, or collective bargaining agreements. The construction contractor is encouraged to publicize the equal employment opportunity policy in the company newspaper and annual report. The Contractor is also responsible to include the EEO policy in all media advertisement.

9. **Are any in-service training programs provided for staff to update the EEO policy?**
   At least annually a review of the EEO policy and the affirmative action obligations are required of all personnel employees of a decision-making status. A record of the meeting including date, time,

location, persons present, subject matter discussed, and disposition of the subject matter should be maintained.

10. **What recruitment efforts are made for Section 3 residents, minorities and women?**
    The construction contractor must notify both orally and in writing, Section 3, minority and female recruitment sources one month prior to the date of acceptance for apprenticeship or other training programs.

11. **Are any measures taken to encourage promotions for minorities and women?**
    Yes, an annual evaluation should be conducted for all minority and female personnel to encourage these employees to seek higher positions.

12. **What efforts are taken to insure that personnel policies are in accordance with the EEO policy?**
    Personnel policies in regard to job practices, work assignments, etc. should be continually monitored to insure that the EEO policy is carried out.

13. **Can women be excluded from utilizing any facilities available to men?**
    No, all facilities and company activities are non-segregated except for bathrooms or changing facilities to ensure privacy.

14. **What efforts should be utilized to include minority and female contractors and suppliers?**
    Take affirmative steps to ensure that small, minority, and women owned businesses are included on all lists for contractors/service providers. Solicit these businesses when issuing RFPs and RFQs and soliciting construction bids. Divide project activities into small tasks to allow participation. Keep records of all offers to minority and female construction contractors.

15. **If a construction contractor participates in a business related association that does not comply with equal opportunity affirmative action standards, does that show his/her failure to comply?**
    No, the construction contractor is responsible for its own compliance.

16. **Can a construction contractor hire a subcontractor who has been debarred from government contracts pursuant to EEO?**
    No. The construction contractor must suspend, terminate or cancel its contract with any Subcontractor who is in violation of the EEO policy.

17. **What effort has been taken by the construction contractor to monitor all employment to insure the company EEO policy is being carried out?**
    The construction contractor must designate a responsible individual to keep accurate records of all employees that includes specific information required by the government.

LOCAL OPPORTUNITY PLAN
SECTION 3 PLAN FORMAT
CONTRACTOR or SUBCONTRACTOR
(if either contract exceeds $100,000.00)

_____agrees to implement the following
(NAME OF CONTRACTOR)
specific affirmative action steps directed at increasing the utilization of lower income residents and businesses within the City/County of _____.

A. To ascertain from the locality's CDBG/DRS program official the exact boundaries of the Section 3 covered project area and where advantageous, seek the assistance of local officials in preparing and implementing the affirmative action plan.

B. To attempt to recruit from within the City/County the necessary number of lower income residents through: local advertising media, signs placed at the proposed site for the project, and community organizations and public or private institutions operating within or serving the project area such as Service Employment and Redevelopment (SER), Opportunities Industrialization Center (OIC), Urban League, Concentrated Employment Program, Hometown Plan, or the U. S. Employment Service.

C. To maintain a list of all lower income residents who have applied either on their own or on referral from any source, and to employ such persons, if otherwise eligible and if a vacancy exists.

D. * To insert this Section 3 Plan in all bid documents, and to require all bidders on subcontracts to submit a Section 3 Plan including utilization goals and the specific steps planned to accomplish these goals.

E. * To ensure that subcontracts, which are typically let on a negotiated rather than a bid basis, in areas other than Section 3 covered project areas, are also let on a negotiated basis whenever feasible, if let in a Section 3 covered project area.

F. To formally contact unions, subcontractors, and trade associations to secure their cooperation for this program.

G. To ensure that all appropriate project area business concerns are notified of pending sub-contractual opportunities.

H. To maintain records, including copies of correspondence, memoranda, etc., which document that all of the above affirmative action steps have been taken.

I. To appoint or recruit an executive official of the company or agency as the Equal Opportunity Officer to coordinate the implementation of this Section 3 Plan.

<u>This Form to Be Completed (If Applicable) Following Bid Award.</u>

J. To list on **Table A** information related to subcontracts to be awarded.

K. To list on **Table B** all projected workforce needs for all phases of this project by occupation, trade, skill level, and number of positions.

L. For employment, 30 percent of all "new hires", at all levels, in conjunction with the CDBG/DRS project must be targeted to Section 3 residents. As stated previously, the extension of employment opportunities to Section 3 residents does not preclude the necessity for meeting the qualifications of the job.

M. For contracting, at least 10 percent of the total dollar amount for all Section 3 covered contracts for building trades work arising from housing rehabilitation and other public construction awarded through this grant must be targeted to Section 3 Business Concerns.

For L. and M. above, if these numerical goals cannot be reached, the contractor will have the burden of demonstrating why it was not feasible to meet these goals. This will include documentation of all efforts to comply and any impediments encountered despite efforts undertaken.

As officers and representatives of _____, we the undersigned have read and fully agree to this Affirmative Action Plan, and become a party to the full implementation of this program.

We appoint _____ as the EEO Officer.

_____
Signature

_____ _____
Title Date

_____
Signature

_____ _____
Title Date

* Loans, grants, contracts, and subsidies for less than $100.000.00 will be exempt.

This Form to Be Completed (If Applicable) Following Bid Award.

TABLE A

PROPOSED SUBCONTRACT BREAKDOWN

CONTRACT NUMBER: _____

PROJECT NAME: _____

CONSTRUCTION CONTRACTOR: _____

COLUMN 1	COLUMN 2	COLUMN 3	COLUMN 4	COLUMN 5
TYPE OF CONTRACT (BUSINESS OR PROFESSION)	TOTAL NUMBER OF CONTRACTS	TOTAL APPROXIMATE DOLLAR AMOUNT	ESTIMATED NUMBER OF CONTRACTS TO PROJECT AREA BUSINESSES*	ESTIMATED DOLLAR AMOUNT TO PROJECT AREA BUSINESSES*

*The Project Area is coextensive with the County of _____'s boundaries.

_____ _____

EEO Officer's Signature Date

This Form to Be Completed (If Applicable) Following Bid Award.

TABLE B

ESTIMATED PROJECT WORKFORCE BREAKDOWN

COLUMN 1	COLUMN 2	COLUMN 3	COLUMN 4	COLUMN 5
Job Category	Total Estimated Positions	No. Positions Currently Occupied By Permanent Employees	No. Positions Not Currently Occupied	No. Positions To Be Filled w/LIPAR*
Officers/Supervisors				
Professionals				
Technicians				
Housing Sales/Rental/Mgmt.				
Office Clerical				
Service Workers				
Others				

SPECIFY TRADE CLASSIFICATION:_____

Journeymen				
Apprentices				
Maximum No. Trainees				
Others				

SPECIFY TRADE CLASSIFICATION: _____

Journeymen				
Apprentices				
Maximum No. Trainees				
Others				

SPECIFY TRADE CLASSIFICATION: _____

Journeymen				
Apprentices				
Maximum No. Trainees				
Others				

*Lower Income Project Area Residents. Individuals residing within the City/County of _____ whose family income does not exceed 80% of the median income in the State.

_____ _____

(EEO Officer's Signature) (COMPANY NAME)

USE ADDITIONAL PAGES IF NECESSARY

This Form to Be Completed (If Applicable) Following Bid Award.

SECTION 3 CERTIFICATION OF SELECTED BIDDER

Completed by Prime Contractor Only

Name of Prime Contractor _____ Project Name and Number _____

The undersigned hereby certifies that:

(Complete Section I or II)

I. A. The positions listed under part B that have been filled by _____ (Name of Prime Contractor)

since being notified of contract selection on _____ (Date of Award/Selection)

were not filled to circumvent the contractor's obligations to provide employment opportunities, including training positions, for Section 3 residents, as required by Section 3 residents of the Housing & Urban Development Act of 1968 and the implementing regulations, 24 CFR Part 135.

B. Employment Positions filled since _____ (Date of Contract Award/Selection).

OR

II. No employment positions have been filled since _____ (Date of Contract Award/Selection).

Name of Signatory (print or type) _____ Title of Signatory _____

Signature _____ Date _____

NOTICE: This certification must be made BEFORE contract execution (24 CFR 135 135.38 (e))

Section 3 Certification of Selected Bidder *Page 1*

This Form to Be Completed (If Applicable) Following Bid Award.

CERTIFICATION OF PROPOSED **SUBCONTRACTOR** REGARDING
SECTION 3 AND SEGREGATED FACILITIES

Name of Subcontractor

Project Name

Contract Number

The undersigned hereby certifies that:

(a) Section 3 provisions are included in the Contract;

(b) A written Section 3 plan was prepared and submitted as part of the bid proceedings (if bid equals or exceeds $100,000);

(c) Tables A and B were prepared and submitted as part of the bid proceedings (if bid equals or exceeds $100,000); and

(d) No segregated facilities will be maintained as required by Title VI of the Civil Rights Act of 1964.

Name & Title of Signer (Print or Type)

Signature

Date

This Form to Be Completed (If Applicable) Following Bid Award.

INSTRUCTIONS FOR COMPLETION OF SF-LLL, DISCLOSURE OF LOBBYING ACTIVITIES

This disclosure form shall be completed by the reporting entity, whether subawardee or prime Federal recipient, at the initiation or receipt of a covered Federal action, or a material change to a previous filing, pursuant to title 31 U.S.C. section 1352. The filing of a form is required for each payment or agreement to make payment to any lobbying entity for influencing or attempting to influence an officer or employee of any agency, a Member of Congress, an officer or employee of Congress, or an employee of a Member of Congress in connection with a covered Federal action. Complete all items that apply for both the initial filing and material change report. Refer to the implementing guidance published by the Office of Management and Budget for additional information.

1. Identify the type of covered Federal action for which lobbying activity is and/or has been secured to influence the outcome of a covered Federal action.

2. Identify the status of the covered Federal action.

3. Identify the appropriate classification of this report. If this is a followup report caused by a material change to the information previously reported, enter the year and quarter in which the change occurred. Enter the date of the last previously submitted report by this reporting entity for this covered Federal action.

4. Enter the full name, address, city, State and zip code of the reporting entity. Include Congressional District, if known. Check the appropriate classification of the reporting entity that designates if it is, or expects to be, a prime or subaward recipient. Identify the tier of the subawardee, e.g., the first subawardee of the prime is the 1st tier. Subawards include but are not limited to subcontracts, subgrants and contract awards under grants.

5. If the organization filing the report in item 4 checks "Subawardee," then enter the full name, address, city, State and zip code of the prime Federal recipient. Include Congressional District, if known.

6. Enter the name of the Federal agency making the award or loan commitment. Include at least one organizational level below agency name, if known. For example, Department of Transportation, United States Coast Guard.

7. Enter the Federal program name or description for the covered Federal action (item 1). If known, enter the full Catalog of Federal Domestic Assistance (CFDA) number for grants, cooperative agreements, loans, and loan commitments.

8. Enter the most appropriate Federal identifying number available for the Federal action identified in item 1 (e.g., Request for Proposal (RFP) number; Invitation for Bid (IFB) number; grant announcement number; the contract, grant, or loan award number; the application/proposal control number assigned by the Federal agency). Include prefixes, e.g., "RFP-DE-90-001."

9. For a covered Federal action where there has been an award or loan commitment by the Federal agency, enter the Federal amount of the award/loan commitment for the prime entity identified in item 4 or 5.

10. (a) Enter the full name, address, city, State and zip code of the lobbying registrant under the Lobbying Disclosure Act of 1995 engaged by the reporting entity identified in item 4 to influence the covered Federal action.

    (b) Enter the full names of the individual(s) performing services, and include full address if different from 10 (a). Enter Last Name, First Name, and Middle Initial (MI).

11. The certifying official shall sign and date the form, print his/her name, title, and telephone number.

According to the Paperwork Reduction Act, as amended, no persons are required to respond to a collection of information unless it displays a valid OMB Control Number. The valid OMB control number for this information collection is OMB No. 0348-0046. Public reporting burden for this collection of information is estimated to average 10 minutes per response, including time for reviewing instructions, searching existing data sources, gathering and maintaining the data needed, and completing and reviewing the collection of information. Send comments regarding the burden estimate or any other aspect of this collection of information, including suggestions for reducing this burden, to the Office of Management and Budget, Paperwork Reduction Project (0348-0046), Washington, DC 20503.

DISCLOSURE OF LOBBYING ACTIVITIES

Approved by OMB
4040-0013

Complete this form to disclose lobbying activities pursuant to 31 U.S.C.1352

Review Public Burden Disclosure Statement

1. * Type of Federal Action:
- [ ] a. contract
- [x] b. grant
- [ ] c. cooperative agreement
- [ ] d. loan
- [ ] e. loan guarantee
- [ ] f. loan insurance

2. * Status of Federal Action:
- [ ] a. bid/offer/application
- [x] b. initial award
- [ ] c. post-award

3. * Report Type:
- [x] a. initial filing
- [ ] b. material change

4. Name and Address of Reporting Entity:

[x] Prime [ ] SubAwardee

* Name
* Street 1 | Street 2
* City | State | Zip
Congressional District, if known:

5. If Reporting Entity in No.4 is Subawardee, Enter Name and Address of Prime:

6. * Federal Department/Agency:

7. * Federal Program Name/Description:
CFDA Number, *if applicable:*

8. Federal Action Number, *if known:*

9. Award Amount, *if known:*
$

10. a. Name and Address of Lobbying Registrant:

Prefix | * First Name | Middle Name
* Last Name | Suffix
* Street 1 | Street 2
* City | State | Zip

b. Individual Performing Services (including address if different from No. 10a)

Prefix | * First Name | Middle Name
* Last Name | Suffix
* Street 1 | Street 2
* City | State | Zip

11. Information requested through this form is authorized by title 31 U.S.C. section 1352. This disclosure of lobbying activities is a material representation of fact upon which reliance was placed by the tier above when the transaction was made or entered into. This disclosure is required pursuant to 31 U.S.C. 1352. This information will be reported to the Congress semi-annually and will be available for public inspection. Any person who fails to file the required disclosure shall be subject to a civil penalty of not less than $10,000 and not more than $100,000 for each such failure.

* Signature:

*Name: Prefix | * First Name | Middle Name
* Last Name | Suffix

Title: | Telephone No.: | Date:

Federal Use Only:

Authorized for Local Reproduction
Standard Form - LLL (Rev. 7-97)

Bidder Shall Return Completed Form with Offer.

CERTIFICATE FROM CONTRACTOR APPOINTING OFFICER OR EMPLOYEE TO SUPERVISE PAYMENT OF EMPLOYEES

Note: This certificate must be executed by an authorized officer of a corporation, by a member of a partnership, or the sole owner and submitted with the first payroll. Should the appointee be changed, a new certificate must accompany the first payroll for which the new appointee executes a statement of compliance required by the Copeland Act.

Locality/Grantee: _____ Contract #:
Project Name: _____

Firm _____ Date: _____

I do hereby certify that I am a contractor on the above-mentioned project and that I have appointed _____ whose signature appears below, to supervise the payment of my employees. I further certify that he/she is in the position to have full knowledge of the facts set forth in the payroll documents and in the statement of compliance required by the Copeland "Anti-Kickback" Act which he/she is to execute with my full authority and approval until such time as I submit to the grantee/locality a new certificate appointing some other person for the purposes herein above stated.

Insert name, address, phone number & email address of person appointed as payroll officer

Name: _____

Address: _____

City: _____ State: _____ Zip Code: _____

Telephone No: _____ Email Address: _____

_____
Identifying Signature of Appointee

_____ Title: _____
Signature of Appointing Officer:

Contractor's Payroll Officer Appointment Form *Page 1*

Bidder Shall Return Completed Form with Offer.

CONTRACTOR'S CERTIFICATION REGARDING LOBBYING FOR
CONTRACTS, GRANTS, LOANS, AND COOPERATIVE AGREEMENTS

Contract Number: _____ Grantee/Locality: _____

The undersigned, _____, of _____
(Name of Signatory Party) (Name of Construction Company)

certifies to the best of his/her knowledge and belief, that:

1) No Federal appropriated funds have been paid or will be paid, by or on behalf of the undersigned, to any person for influencing or attempting to influence an officer or employee of an agency, a Member of Congress, an officer or employee of Congress, or an employee of a Member of Congress in connection with the awarding of any Federal contract, the making of any Federal grant, the making of any Federal loan, the entering into of any agreement, and the extension, continuation, renewal, amendment, or modification of any Federal contract, grant, loan, or cooperative agreement.

2) If any funds other than Federal appropriated funds have been paid or will be paid to any person for influencing or attempting to influence an officer or employee of any agency, a Member of Congress, an officer of employee of Congress, or an employee of a Member of Congress in connection with this Federal contract, grant, loan, or cooperative agreement, the undersigned shall complete and submit Standard Form - LLL, "Disclosure Form to Report Lobbying," in accordance wit its instructions.

3) The undersigned shall require that the language of this certification be included in the award documents for all sub-awards at all tiers (including subcontracts, sub-grants, and contracts under grants, loans, and cooperative agreements) and that all sub-recipients shall certify and disclose accordingly.

This certification is a material representation of fact upon which reliance was placed when this transaction was made or entered into. Submission of this certification is s prerequisite for making or entering into this transaction imposed by section 1352, title 31, U.S. Code. Any person who fails to files the required certification shall be subject to a civil penalty of not less than $10,000 and not more than $100,000 for each such failure.

SIGNED: _____ DATE: _____

_____
TITLE

Contractor's Lobbying Certification Page 1

Bidder Shall Return Completed Form with Offer.

TITLE 29--Labor

Subtitle A--OFFICE OF THE SECRETARY OF LABOR

PART 3--CONTRACTORS AND SUBCONTRACTORS ON PUBLIC BUILDING OR PUBLIC WORK FINANCED IN WHOLE OR IN PART BY LOANS OR GRANTS FROM THE UNITED STATES

SEC.

3.1 Purpose and Scope
3.2 Definitions
3.3 Weekly Statement with respect to payment of wages
3.4. Submission of weekly statement and the preservation and inspection of weekly payroll records
3.5 Payroll deductions permissible without application to or approval of the Secretary of Labor.
3.6 Payroll deductions permissible with the approval of the Secretary of Labor.
3.7 Applications for the approval of the Secretary of Labor
3.8 Action by the Secretary of Labor upon applications.
3.9 Prohibited payroll deductions
3.10 Method of payment of wages
3.11 Regulations part of contract

AUTHORITY: The provisions of this Part 3 issued under R.S. 161, sec.2, 48 STAT. §48:Reorg.Plan No. 14 of 1950, 64 Stat. 1267,5 U.S.C. Appendix; 5 U.S.C. 301; 40 U.S.C. 276c.

SOURCE: The provisions of this Part 3 appear at 29 F.R. 97, Jan.4, 1964, unless otherwise noted.

§ 3.1 Purpose and scope.

This part prescribes "anti-kickback" regulations under section 2 of the Act of June 13, 1934, as amended (40 U.S.C. 276c), popularly known as the Copeland Act. This part applies to any contract which is subject to Federal wage standards and which is for the construction, prosecution, completion, or repair of public buildings, public works or buildings or works financed in whole or in part by loans or grants from the United States. The part is intended to aid in the enforcement of the minimum wage provisions of the Davis-Bacon Act and the various statutes dealing with federally assisted construction that contain similar minimum wage provisions, including those provisions which are not subject to Reorganization Plan No. 14 (e.g., the College Housing Act of 1950, the Federal Water Pollution Control Act, and the Housing Act of 1959), and in the enforcement of the overtime provisions of the Contract Work Hours Standards Act whenever they are applicable to construction work. The part details the obligation of contractors and subcontractors relative to the weekly submission of statements regarding the wages paid on work covered thereby; sets forth the circumstances and procedures governing the making of payroll deductions from the wages of those employed on such work; and delineates the methods of payment permissible on such work.

§ 3.2 Definitions.

As used in the regulations in this part:

(a) The terms *building* or *work* generally include construction activity as distinguished from manufacturing, furnishing of materials, or servicing and maintenance work. The terms include, without limitation, buildings, structures, and improvements of all types, such as bridges, dams, plants, highways, parkways, streets, subways, tunnels, sewers, mains, powerlines, pumping stations, railways, airports, terminals, docks, piers, wharves, ways, lighthouses, buoys, jetties, breakwaters, levees, and canals; dredging, shoring, scaffolding, drilling, blasting, excavating, clearing, and landscaping. Unless conducted in connection with and at the site of such a building or work as is described in the foregoing sentence, the manufacture or furnishing of materials, articles, supplies, or equipment (whether or not a Federal or State agency acquires title to such materials, articles, supplies, or equipment during the course of the manufacture or furnishing, or owns the materials from which they are manufactured or furnished) is not a *building* or *work* within the meaning of the regulations in this part.

(b) The terms *construction*, *prosecution*, *completion*, or *repair* mean all types of work done on a particular building or work at the site thereof, including, without limitation, altering, remodeling, painting and decorating, the transporting of materials and supplies to or from the building or work by the employees of the construction contractor or construction subcontractor, and the manufacturing or furnishing of materials, articles, supplies, or equipment on the site of the building or work, by persons employed at the site by the contractor or subcontractor.

(c) The terms *public building* or *public work* include building or work for whose construction, prosecution, completion, or repair, as defined above, a Federal

agency is a contracting party, regardless of whether title thereof is in a Federal agency.

(d) The term *building or work financed in whole or in part by loans or grants from the United States* includes building or work for whose construction, prosecution, completion, or repair, as defined above, payment or part payment is made directly or indirectly from funds provided by loans or grants by a Federal agency. The term includes building or work for which the Federal assistance granted is in the form of loan guarantees or insurance.

(e) Every person paid by a contractor or subcontractor in any manner for his labor in the construction, prosecution, completion, or repair of a public building or public work or building or work financed in whole or in part by loans or grants from the United States is *employed* and receiving *wages*, regardless of any contractual relationship alleged to exist between him and the real employer.

(f) The term *any affiliated person* includes a spouse, child, parent, or other close relative of the contractor or subcontractor; a partner or officer of the contractor or subcontractor; a corporation closely connected with the contractor or subcontractor as parent, subsidiary, or otherwise, and an officer or agent of such corporation.

(g) The term *Federal agency* means the United States, the District of Columbia, and all executive departments, independent establishments, administrative agencies, and instrumentalities of the United States and of the District of Columbia, including corporations, all or substantially all of the stock of which is beneficially owned by the United States, by the District of Columbia, or any of the foregoing departments, establishments, agencies, and instrumentalities.

[29 FR 97, Jan. 4, 1964, as amended at 38 FR 32575, Nov. 27, 1973]

§ 3.3 Weekly statement with respect to payment of wages.

(a) As used in this section, the term *employee* shall not apply to persons in classifications higher than that of laborer or mechanic and those who are the immediate supervisors of such employees.

(b) Each contractor or subcontractor engaged in the construction, prosecution, completion, or repair of any public building or public work, or building or work financed in whole or in part by loans or grants from the United States, shall furnish each week a statement with respect to the wages paid each of its employees engaged on work covered by this part 3 and part 5 of this title during the preceding weekly payroll period. This statement shall be executed by the contractor or subcontractor or by an authorized officer or employee of the contractor or subcontractor who supervises the payment of wages, and shall be on the back of Form WH 347, "Payroll (For Contractors Optional Use)" or on any form with identical wording. Copies of Form WH 347 may be obtained from the Government contracting or sponsoring agency or from the Wage and Hour Division Web site at *http://www.dol.gov/esa/whd/forms/wh347instr.htm* or its successor site.

(c) The requirements of this section shall not apply to any contract of $2,000 or less.

(d) Upon a written finding by the head of a Federal agency, the Secretary of Labor may provide reasonable limitations, variations, tolerances, and exemptions from the requirements of this section subject to such conditions as the Secretary of Labor may specify.

[29 FR 97, Jan. 4, 1964, as amended at 33 FR 10186, July 17, 1968; 47 FR 23679, May 28, 1982; 73 FR 77511, Dec. 19, 2008]

§ 3.4 Submission of weekly statements and the preservation and inspection of weekly payroll records.

(a) Each weekly statement required under §3.3 shall be delivered by the contractor or subcontractor, within seven days after the regular payment date of the payroll period, to a representative of a Federal or State agency in charge at the site of the building or work, or, if there is no representative of a Federal or State agency at the site of the building or work, the statement shall be mailed by the contractor or subcontractor, within such time, to a Federal or State agency contracting for or financing the building or work. After such examination and check as may be made, such statement, or a copy thereof, shall be kept available, or shall be transmitted together with a report of any violation, in accordance with applicable procedures prescribed by the United States Department of Labor.

(b) Each contractor or subcontractor shall preserve his weekly payroll records for a period of three years from date of completion of the contract. The payroll records shall set out accurately and completely the name and address of each laborer and mechanic, his correct classification, rate of pay, daily and weekly number of hours worked, deductions made, and actual wages paid. Such payroll records shall be made available at all times for inspection by the contracting officer or his authorized representative, and by authorized representatives of the Department of Labor.

(Reporting and recordkeeping requirements in paragraph (b) have been approved by the Office of Management and Budget under control number 1215–0017)

[29 FR 97, Jan. 4, 1964, as amended at 47 FR 145, Jan. 5, 1982]

§ 3.5 Payroll deductions permissible without application to or approval of the Secretary of Labor.

Deductions made under the circumstances or in the situations described in the paragraphs of this section may be made without application to and approval of the Secretary of Labor:

(a) Any deduction made in compliance with the requirements of Federal, State, or local law, such as Federal or State withholding income taxes and Federal social security taxes.

(b) Any deduction of sums previously paid to the employee as a bona fide prepayment of wages when such prepayment is made without discount or interest. A *bona fide prepayment of wages* is considered to have been made only when cash or its equivalent has been advanced to the person employed in such manner as to give him complete freedom of disposition of the advanced funds.

(c) Any deduction of amounts required by court process to be paid to another, unless the deduction is in favor of the contractor, subcontractor, or any affiliated person, or when collusion or collaboration exists.

(d) Any deduction constituting a contribution on behalf of the person employed to funds established by the employer or representatives of employees, or both, for the purpose of providing either from principal or income, or both, medical or hospital care, pensions or annuities on retirement, death benefits, compensation for injuries, illness, accidents, sickness, or disability, or for insurance to provide any of the foregoing, or unemployment benefits, vacation pay, savings accounts, or similar payments for the benefit of employees, their families and dependents: *Provided, however*, That the following standards are met:

(1) The deduction is not otherwise prohibited by law;

(2) It is either:

(i) Voluntarily consented to by the employee in writing and in advance of the period in which the work is to be done and such consent is not a condition either for the obtaining of or for the continuation of employment, or

(ii) provided for in a bona fide collective bargaining agreement between the contractor or subcontractor and representatives of its employees;

(3) No profit or other benefit is otherwise obtained, directly or indirectly, by the contractor or subcontractor or any affiliated person in the form of commission, dividend, or otherwise; and

(4) The deductions shall serve the convenience and interest of the employee.

(e) Any deduction contributing toward the purchase of United States Defense Stamps and Bonds when voluntarily authorized by the employee.

(f) Any deduction requested by the employee to enable him to repay loans to or to purchase shares in credit unions organized and operated in accordance with Federal and State credit union statutes.

(g) Any deduction voluntarily authorized by the employee for the making of contributions to governmental or quasi-governmental agencies, such as the American Red Cross.

(h) Any deduction voluntarily authorized by the employee for the making of contributions to Community Chests, United Givers Funds, and similar charitable organizations.

(i) Any deductions to pay regular union initiation fees and membership dues, not including fines or special assessments: *Provided, however*, That a collective bargaining agreement between the contractor or subcontractor and representatives of its employees provides for such deductions and the deductions are not otherwise prohibited by law.

(j) Any deduction not more than for the "reasonable cost" of board, lodging, or other facilities meeting the requirements of section 3(m) of the Fair Labor Standards Act of 1938, as amended, and part 531 of this title. When such a deduction is made the additional records required under §516.25(a) of this title shall be kept.

(k) Any deduction for the cost of safety equipment of nominal value purchased by the employee as his own property for his personal protection in his work, such as safety shoes, safety glasses, safety gloves, and hard hats, if such equipment is not required by law to be furnished by the employer, if such deduction is not violative of the Fair Labor Standards Act or prohibited by other law, if the cost on which the deduction is based does not exceed the actual cost to the

employer where the equipment is purchased from him and does not include any direct or indirect monetary return to the employer where the equipment is purchased from a third person, and if the deduction is either

(1) Voluntarily consented to by the employee in writing and in advance of the period in which the work is to be done and such consent is not a condition either for the obtaining of employment or its continuance; or

(2) Provided for in a bona fide collective bargaining agreement between the contractor or subcontractor and representatives of its employees.

[29 FR 97, Jan. 4, 1964, as amended at 36 FR 9770, May 28, 1971]

§ 3.6 Payroll deductions permissible with the approval of the Secretary of Labor.

Any contractor or subcontractor may apply to the Secretary of Labor for permission to make any deduction not permitted under §3.5. The Secretary may grant permission whenever he finds that:

(a) The contractor, subcontractor, or any affiliated person does not make a profit or benefit directly or indirectly from the deduction either in the form of a commission, dividend, or otherwise;

(b) The deduction is not otherwise prohibited by law;

(c) The deduction is either (1) voluntarily consented to by the employee in writing and in advance of the period in which the work is to be done and such consent is not a condition either for the obtaining of employment or its continuance, or (2) provided for in a bona fide collective bargaining agreement between the contractor or subcontractor and representatives of its employees; and

(d) The deduction serves the convenience and interest of the employee.

§ 3.7 Applications for the approval of the Secretary of Labor.

Any application for the making of payroll deductions under §3.6 shall comply with the requirements prescribed in the following paragraphs of this section:

(a) The application shall be in writing and shall be addressed to the Secretary of Labor.

(b) The application need not identify the contract or contracts under which the work in question is to be performed. Permission will be given for deductions on all current and future contracts of the applicant for a period of 1 year. A renewal of permission to make such payroll deduction will be granted upon the submission of an application which makes reference to the original application, recites the date of the Secretary of Labor's approval of such deductions, states affirmatively that there is continued compliance with the standards set forth in the provisions of §3.6, and specifies any conditions which have changed in regard to the payroll deductions.

(c) The application shall state affirmatively that there is compliance with the standards set forth in the provisions of §3.6. The affirmation shall be accompanied by a full statement of the facts indicating such compliance.

(d) The application shall include a description of the proposed deduction, the purpose to be served thereby, and the classes of laborers or mechanics from whose wages the proposed deduction would be made.

(e) The application shall state the name and business of any third person to whom any funds obtained from the proposed deductions are to be transmitted and the affiliation of such person, if any, with the applicant.

[29 FR 97, Jan. 4, 1964, as amended at 36 FR 9771, May 28, 1971]

§ 3.8 Action by the Secretary of Labor upon applications.

The Secretary of Labor shall decide whether or not the requested deduction is permissible under provisions of §3.6; and shall notify the applicant in writing of his decision.

§ 3.9 Prohibited payroll deductions.

Deductions not elsewhere provided for by this part and which are not found to be permissible under §3.6 are prohibited.

§ 3.10 Methods of payment of wages.

The payment of wages shall be by cash, negotiable instruments payable on demand, or the additional forms of compensation for which deductions are permissible under this part. No other methods of payment shall be recognized on work subject to the Copeland Act.

§ 3.11 Regulations part of contract.

All contracts made with respect to the construction, prosecution, completion, or repair of any public building or public work or building or work financed in whole or in part by loans or grants from the United States covered by the regulations in this part shall expressly bind the contractor or subcontractor to comply with such of the regulations in this part as may be applicable. In this regard, see §5.5(a) of this subtitle.

Complaint Register
Under Section 3 of the Housing
And Urban Development Act of 1968

U.S. Department of Housing and Urban Development
Office of Fair Housing
and Equal Opportunity

OMB Approval No. 2529-0043 (revised)
(Expires11/30/2018)

Instructions: This form is to be used to report allegations of noncompliance with Section 3 of the Housing and Urban Development Act of 1968, as amended and implementing regulations at 24 CFR Part 135.

1. Complainant Information:

Name of Complainant (Person or organization)	Home Phone
Street Address	Work Phone
City, State, Zip code	
Email Address:	

2. You are: (check all that apply)

- ☐ Low/Very Low Income Person
- ☐ Public Housing Resident
- ☐ HUD Youthbuild Participant
- ☐ A Representative of any of the above listed Individuals (Such as: a Low-Income Person or Public Housing Resident)
- ☐ Section 3 Business
- ☐ A Representative of a Section 3 Business
- ☐ Other: _____

3. Basis for alleged noncompliance with Section 3:

☐ Denied Training ☐ Denied Employment ☐ Denied Contracting ☐ Other (see below in item 6)

4. Complaint is against: (check one or more boxes)

☐ Recipient of HUD Funds (Such: as a PHA, city/county agency, etc.) ☐ Contractor ☐ Subcontractor ☐ Other (please specify): _____

5. Who is this complaint being filed against?

Name of agency, organization, or company:	Business Phone
Street Address	
City, State, Zip code	
Name and identify others (if any) who allegedly violated Section 3 in this case:	

Previous Editions are Obsolete Page 1 of 9 form **HUD-958 (5/2016)**

Form Included for Use (If Applicable) During Construction Phase of this Project.

6. **How did the HUD recipient, contractor, or subcontractor violate the requirements of Section 3?** (Check all that apply – provide documentation, if available)

HUD Recipient	Contractor and/or Subcontractor
☐ Failed to notify Section 3 businesses about contracting opportunities	☐ Failed to certify that all employment vacancies filled prior to contract execution were not filled to circumvent Section 3
☐ Failed to incorporate the Section 3 Clause into covered Section 3 bid solicitations or contracts	☐ Failed to notify potential subcontractors about Section 3 requirements
☐ Failed to provide priority consideration to Section 3 businesses for covered contracting opportunities	☐ Failed to post notices at the work site regarding Section 3 requirements in accordance with the Section 3 Clause
☐ Failed to select Section 3 businesses in accordance with the order of priority consideration as set forth in 24 CFR 135.36	☐ Failed to send to each labor organization or representative of workers a notice of Section 3 obligations in accordance with the Section 3 Clause
☐ Failed to award contracts to Section 3 businesses	☐ Failed to ensure that its subcontractors complied with Section 3
☐ Failed to ensure that its contractors/ subcontractors complied with Section 3 requirements	☐ Failed to train and/or hire Section 3 residents for new employment opportunities
☐ Knowingly entered into contracts with contractors/ subcontractors that failed to comply with Section 3 requirements	☐ Failed to provide priority consideration to Section 3 residents for employment or training opportunities in accordance with 24 CFR Part 135.34
☐ Failed to notify Section 3 residents about training and/or employment opportunities	☐ Failed to ensure that contracts awarded to subcontractors included the Section 3 Clause
☐ Failed to provide priority consideration to Section 3 residents for employment or training opportunities	☐ Failed to award subcontracts to Section 3 businesses
☐ Failed to select Section 3 residents for training or employment opportunities in accordance with the order of priority consideration set forth in 24 CFR 135.34	☐ Failed to award subcontracts to Section 3 businesses in accordance with the order of priority consideration set forth in 24 CFR 135.34
☐ Failed to hire Section 3 residents for new employment opportunities	☐ Retaliated against the complainant because complainant sought to enforce Section 3 requirements or participated in an investigation or proceeding regarding Section 3
☐ Retaliated against the complainant because complainant sought to enforce Section 3 requirements or participated in an investigation or proceeding regarding Section 3	☐ Other _____
☐ Other _____	

Previous Editions are Obsolete Page 2 of 9 form **HUD-958**

Form Included for Use (If Applicable) During Construction Phase of this Project.

7. **When did the act(s) checked above occur?** (Include the most recent date if several dates are involved):
_____/ _____/ _____ Month Day Year * The date of the last alleged violation or occurrence must be less than 180 days from the date of submission to HUD.

8. **Project name or location where alleged violation occurred?** (If applicable):
Project Name (if applicable): _____ Project Number: _____ Project Location: _____ Local Contracting Agency (LCA): _____

9. **Identify the type of HUD funding used by the HUD funding recipient, organization, or contractor that this complaint is filed against**: (Check all that apply)			
☐ PIH Operating Subsidy	☐ Other PIH Assistance	☐ Neighborhood Stabilization Program (NSP) Assistance	☐ Section 811 Supportive Housing for the Disabled
☐ PIH Capital Fund Subsidy	☐ Community Development Block Grants (CDBG)	☐ Other Community Development Assistance	☐ Project Based Housing Vouchers
☐ Choice Neighborhood Initiative Grant	☐ HOME Investment Partnership Funding	☐ Lead-Based Paint	☐ Other HUD Housing Assistance
☐ HOPE VI Grant	☐ McKinney Homeless Assistance	☐ Section 202Supportive Housing for the Elderly	☐ Other Covered HUD Funding

Form Included for Use (If Applicable) During Construction Phase of this Project.

10. **Description of act(s) or incident(s) involving alleged violation of Section 3:** Summarize what happened? Attach additional information if necessary	
11. **Declaration Statement** **I declare under penalty of perjury that I have read this complaint (including any attachments) and that all information is accurate and correct.**	
Signature	Date

Previous Editions are Obsolete Page 4 of 9 form **HUD-958**

Form Included for Use (If Applicable) During Construction Phase of this Project.

Section 3 of the Housing and Urban Development Act of 1968

Public reporting burden for this collection of information is estimated to average 2 hours per response, including the time for reviewing instructions, searching existing data sources, gathering and maintaining the data needed, and completing and reviewing the collection of information. This agency may not collect this information, and you are not required to complete this form, unless it displays a currently valid OMB number.

The information is given voluntarily and provides the basis for HUD's investigation of the complaint to determine if the allegations of noncompliance are valid. The Department will use the information provided as the basis for its determination of jurisdiction over a complainant's allegations. All information collected complies with the Privacy Act of 1974 and OMB Circular A-108. The information is unique to the processing of complaints alleging noncompliance with the Section 3 statute or implementing regulations. The information collected on this form will only be used by HUD during the investigation and resolution of complaints and will not be shared with persons or parties that are not directly involved with the complaint.

What is Section 3 of the Housing and Urban Development Act of 1968?

Section 3 is a provision of the Housing and Urban Development (HUD) Act of 1968 that helps foster local economic development, neighborhood economic improvement, and individual self-sufficiency. The Section 3 requirements ensure that ***when*** new jobs or contracts are created during the usage of certain HUD funds, priority consideration is given to low- and very low-income persons residing in the community in which the funds are spent (regardless of race or gender), and to the businesses that substantially employ these persons.

Who are Section 3 residents and businesses?

Section 3 residents are:

- Public housing residents; or
- Persons who live in the area where a HUD-assisted project is located and who have a household income that falls below HUD's income limits for low- and very low-income.

Please visit: http://www.huduser.org/portal/datasets/il.html to determine the income limits for residents of your community.

A Section 3 business is one that meets one of the following criteria:

- Is 51 percent or more owned by Section 3 residents;
- Employs Section 3 residents for at least 30 percent of its full-time, permanent staff; or
- Provides evidence of a commitment to subcontract to Section 3 business concerns, 25 percent or more of the dollar amount of the awarded contract.

What HUD funding does Section 3 cover?

Section 3 applies to any of the following:

A. Public and Indian Housing programs that receive: (1) Annual contributions for low income housing projects provided pursuant to section 5 of the U.S. Housing Act of 1937, as amended by the Quality Housing and Work Responsibility Act of 1998 (QWHRA); (2) Capital Fund Project assistance provided pursuant to Section 9 of QHWRA; (3) Operating Subsidy assistance provided pursuant to Section 9 of QHWRA.
B. Housing and community development assistance extended for: (1) housing rehabilitation (including reduction and abatement of lead based paint hazards); (2) housing construction or (3) other public construction projects; and for which the contract and subcontract exceeds $100,000; and
C. Certain competitive HUD grant funding, such as: HOPE VI, Choice Neighborhoods, etc.).

Previous Editions are Obsolete Page 5 of 9 form **HUD-958**

Form Included for Use (If Applicable) During Construction Phase of this Project.

What can you do about violations of the Law?

Remember, Section 3 applies to the awarding of jobs, training programs, and contracts, generated from projects receiving HUD financial assistance. If you believe that, as a low-income person or a Section 3 business concern, the responsibilities to provide economic opportunities under Section 3 have been violated, you have a right to file a complaint within **180 days** of the last alleged occurrences of noncompliance.

Complaints alleging violations of the Section 3 regulatory requirements must be submitted to the appropriate HUD Regional Office of Fair Housing and Equal Opportunity listed below. Please be certain to sign and date this form, where indicated, to ensure prompt complaint processing.

HUD will send the complaint to the appropriate HUD recipient for resolution. If resolution by the recipient fails, HUD will investigate. If HUD finds that the complaint has merit, it will try to end the violation by informal resolution. If conciliation fails, HUD may initiate other steps to enforce the law, including but not limited to suspension and debarment of the recipient or contractors as applicable.

You can obtain assistance in learning about more Section 3 by visiting www.hud.gov/section3 or by contacting one of the HUD's Regional Offices of Fair Housing and Equal Opportunity.

Authority: Section 3 of the Housing and Urban Development Act of 1968, as amended by the Housing and Community Development Act of 1968, as amended by the Housing and Community Development Act of 1992, U.S.C. 1701u and implementing regulations at 24 CFR Part 135.

Purpose: The information requested on this form is to be used to investigate and process Section 3 complaints.

Use: The information requested will be used to process a complaint filed under Part 135. HUD may disclose certain information for Federal, State, and local agencies when relevant to civil, criminal, or regulatory investigations and prosecutions. It will not be otherwise disclosed or released outside of HUD, except as required and permitted by law.

Penalty: Failure to provide some or all of the requested information will result in delayed processing or rejection of this complaint for investigation.

Privacy Act of 1974 (P.L.93-579)
All information collected is provided voluntarily and complies with the Privacy Act of 1974 and OMB Circular A-108. The information is unique to the processing of complaints alleging noncompliance with the Section 3 statute or implementing regulations. The information collected on this form will only be used by HUD during the investigation and resolution of complaints and will not be shared with persons or parties that are not directly involved with the complaint.

Previous Editions are Obsolete Page 6 of 9 form **HUD-958**

Form Included for Use (If Applicable) During Construction Phase of this Project.

Instructions for completing the Section 3 Complaint Register

Box 1: Enter the requested information for the person that is filing the complaint (i.e., the complainant). This person must meet the definition of a Section 3 resident or business.

Box 2: Select the appropriate statement that describes your status as a Section 3 resident, businesses, or representative of either.

Box 3: Select the appropriate basis for the complaint which you are filing.

Box 4: Select the appropriate option that best describes the person or entity that you are filing this complaint against.

Box 5: Provide the name, address, and contact information for the person or entity that you are filing this complaint against.

Box 6: Select the statement(s) that best describe the alleged actions or omissions undertaken by the person or entity that you are filing this complaint against that are in violation of the requirements of Section 3. If you select "other", please briefly describe the alleged violation on the appropriate line.

Box 7: Provide the date that the alleged violation or action occurred. If the alleged act or violation is continuing in nature, please provide the date of the most recent occurrence.

Box 8: If this complaint is based upon acts or omissions that occurred at a specific job site, project, or location, please provide information that will allow HUD to identify the specific project that is the subject of the complaint that you are filing.

Box 9: Select the appropriate type of covered HUD funding that the recipient, organization, contractor/ subcontractor received or administered.
NOTE: In order for the complaint to be jurisdictional, covered HUD funding must be administered by the recipient, organization, contractor/subcontractor.

Box 10: Provide a detailed description of the acts or omissions undertaken by the person or entity that you filing this complaint against. Provide enough specific information to enable HUD to clearly understand the alleged violation and whether it demonstrates noncompliance with the requirements of Section 3.

Box 11: Please sign the complaint and enter the current date.
NOTE: By signing and dating this complaint you are affirming that your statements and allegations are true and accurate by penalty of perjury. Complaints **must** be signed and dated prior to acceptance by HUD for investigation.

Form Included for Use (If Applicable) During Construction Phase of this Project.

Where to file your complaint:
Please fax or mail your complaint to the appropriate HUD Regional Office of Fair Housing and Equal Opportunity that has jurisdiction over the state for which you are located or where the alleged violation occurred. Inquiries regarding the status of your complaint should be directed to the appropriate Regional office of FHEO by telephone or email.

BOSTON REGIONAL OFFICE U.S. Department of Housing and Urban Development New England Office 10 Causeway Street, Suite 308 Boston, MA 02222 (617) 994-8300 (800) 827-5005 Fax⊗617) 565-7313 Email: complaints_office_01@hud.gov *Covers the following states: Connecticut, Maine, Massachusetts, New Hampshire, Rhode Island, and Vermont	**FORT WORTH REGIONAL OFFICE** U.S. Department of Housing and Urban Development Southwest Office 801 Cherry St., Unit 45, Suite 2500 Fort Worth, TX 76102 (817) 978-5900 (888)560-8913 Fax⊗817) 978-5876 Email: complaints_office_06@hud.gov *Covers the following states: Arkansas, Louisiana, New Mexico, Oklahoma, and Texas
NEW YORK REGIONAL OFFICE U.S. Department of Housing and Urban Development New York and New Jersey Office 26 Federal Plaza New York, NY 10278 (212) 264-1290 (800) 496-4294 Fax: (212) 264-9829 Email: complaints_office_02@hud.gov *Covers the following states: New Jersey and New York	**KANSAS CITY REGIONAL OFFICE** U.S. Department of Housing and Urban Development Great Plains Office 400 State Avenue Kansas City, KS 66101 (913) 551-6958 (800) 743-5323 Fax: (913) 551-6856 Email: complaints_office_07@hud.gov *Covers the following states: Iowa, Kansas, Missouri, and Nebraska
PHILADELPHIA REGIONAL OFFICE U.S. Department of Housing and Urban Development Mid-Atlantic Office 100 Penn Square East, 12th Floor Philadelphia, PA 19107 (215) 861-7646 (888) 799-2085 Fax: (215) 656-3449 Email: complaints_office_03@hud.gov *Covers the following states: Delaware, District of Columbia, Maryland, Pennsylvania, Virginia, and West Virginia	**DENVER REGIONAL OFFICE** U.S. Department of Housing and Urban Development Rocky Mountain Office 1670 Broadway Denver, CO 80202 (303) 672-5437 (800) 877-7353 Fax: (303) 672-5026 Email: complaints_office_08@hud.gov *Covers the following states: Colorado, Montana, North Dakota, South Dakota, Utah, and Wyoming

Previous Editions are Obsolete Page 8 of 9 form **HUD-958**

Form Included for Use (If Applicable) During Construction Phase of this Project.

ATLANTA REGIONAL OFFICE U.S. Department of Housing and Urban Development Southeast Office 40 Marietta Street Atlanta, GA 30303 (404) 331-5140 (800) 440-8091 Fax: (404) 331-1021 Email: complaints_office_04@hud.gov *Covers the following states: Alabama, Puerto Rico, Florida, Georgia, Kentucky, Mississippi, North Carolina, South Carolina, Tennessee, and the Virgin Islands	**SAN FRANCISCO REGIONAL OFFICE** U.S. Department of Housing and Urban Development Pacific/Hawaii Office 600 Harrison Street Third Floor San Francisco, CA 94107 (415) 489-6536 (800) 347-3739 Fax: (415) 489-6560 Email: complaints_office_09@hud.gov *Covers the following states: Arizona, California, Guam, Hawaii, and Nevada
CHICAGO REGIONAL OFFICE U.S. Department of Housing and Urban Development Midwest Office 77 W. Jackson Boulevard, Suite 2101 Chicago, IL 60604 (312) 353-7776 (800) 765-9372 Fax: (312) 886-2837 Email: complaints_office_05@hud.gov *Covers the following states: Illinois, Indiana, Michigan, Minnesota, Ohio, and Wisconsin	**SEATTLE REGIONAL OFFICE** U.S. Department of Housing and Urban Development Northwest/Alaska Office 909 First Avenue Seattle, WA 98104 (206) 220-5170 (800)877-0246 Fax: (206) 220-5447 Email: complaints_office_03@hud.gov *Covers the following states: Alaska, Idaho, Oregon, and Washington

Previous Editions are Obsolete Page 9 of 9 form **HUD-958**

Form Included for Use (If Applicable) During Construction Phase of this Project.

Technical Specifications

Please see Technical Specifications
And Construction Documents in this
Project Manual Beginning on page 01100-1

JEFFERSON COUNTY ENGINEERING DEPARTMENT
JCSO HANGAR BUILDING

PROJECT CONSTRUCTION MANUAL

JEFFERSON COUNTY SHERRIFF'S OFFICE

HANGAR BUILDING

AT

JACK BROOKS REGIONAL AIRPORT

BEAUMONT, TEXAS

LJA Engineering, Inc.
Midstream Infrastructure
905 Orleans Street
Beaumont, Texas 77701
Phone 409.813.1862
Fax 409.813.1916
FRN - F-1386

STATE OF TEXAS
HEATH E. REYNOLDS
113232
LICENSED
PROFESSIONAL ENGINEER

WRS
White Rock Studio
1407 San Saba Drive
Dallas, Texas 75218
Office: 214.763.0416

REGISTERED ARCHITECT
WALTER A. REEDS
11498
STATE OF TEXAS

JEFFERSON COUNTY ENGINEERING DEPARTMENT
JCSO HANGAR BUILDING

INDEX OF DRAWINGS

GENERAL
G1.01 COVER SHEET

CIVIL
C1.01 SITE PLAN
C1.02 PROPOSED GRADING AND PAVING PLAN
C1.03 HANGAR ACCESS DRIVE/PARKING JOINT PLAN
C1.04 HANGAR FOUNDATION PLAN
C1.05 HANGAR TAXI-WAY APRON JOINT PLAN
C1.06 HANGAR ACCESS DRIVE & TAXI-WAY APRON DETAILS
C1.07 HANGAR FOUNDATION DETAILS
C1.08 EXISTING NATURAL GRADE PLAN
C2.01 PROPOSED UTILITIES PLAN
C2.02 PROPOSED ELECTRICAL PLAN

ARCHITECTURAL
A2.01 FLOOR PLAN
A2.02 ENLARGED FLOOR PLAN
A2.03 ENLARGED FRAMING PLAN
A2.04 ENLARGED FRAMING PLAN, PLAN DETAILS & SECTIONS
A3.01 BUILDING ELEVATIONS
A7.01 REFLECTED CEILING PLAN
A7.02 ENLARGED REFLECTED CEILING PLAN

MECHANICAL
M2.01 FLOOR PLAN
M2.02 ENLARGED FLOOR PLAN
M2.03 CUT SHEETS
M2.04 CUT SHEETS

ELECTRICAL
POWER
EP2.01 FLOOR PLAN
EP2.02 ENLARGED FLOOR PLAN

LIGHTING
EL7.01 REFLECTED CEILING PLAN
EL7.02 ENLARGED REFLECTED CEILING PLAN

PLUMBING
P2.01 FLOOR PLAN
P2.02 ENLARGED FLOOR PLAN

END OF INDEX DRAWINGS

TABLE OF CONTENTS

Division	Section Title	Pages
	PROCUREMENT AND CONTRACTING DOCUMENTS GROUP	
DIVISION 00 - PROCUREMENT AND CONTRACTING REQUIREMENTS		
NOT APPLICABLE		
	SPECIFICATIONS GROUP	
	General Requirements Subgroup	
DIVISION 01 - GENERAL REQUIREMENTS		
011000	SUMMARY	4
012500	SUBSTITUTION PROCEDURES	4
012600	CONTRACT MODIFICATION PROCEDURES	3
012900	PAYMENT PROCEDURES	4
013100	PROJECT MANAGEMENT AND COORDINATION	7
013200	CONSTRUCTION PROGRESS DOCUMENTATION	4
013300	SUBMITTAL PROCEDURES	9
014000	QUALITY REQUIREMENTS	7
014200	REFERENCES	13
015000	TEMPORARY FACILITIES AND CONTROLS	8
016000	PRODUCT REQUIREMENTS	7
017300	EXECUTION	7
017700	CLOSEOUT PROCEDURES	5
017823	OPERATION AND MAINTENANCE DATA	5
017839	PROJECT RECORD DOCUMENTS	4
	Facility Construction Subgroup	
DIVISION 02 - EXISTING CONDITIONS		
021000	PROTECTION OF ENVIRONMENT	4
DIVISION 03 - CONCRETE		
033000	CAST-IN-PLACE CONCRETE	7
DIVISION 05 - METALS		
051000	METAL PRE-ENGINEERED METAL BUILDING	10
055000	METAL FABRICATIONS	3
055001	ANCHOR ROD ASSEMBLIES	2

Architectural Subgroup

DIVISION 06 - WOOD, PLASTICS, AND COMPOSITES		
061100	WOOD FRAMING	4
066400	FIBERGLASS-REINFORCED PANELS	2
DIVISION 07 - THERMAL AND MOISTURE PROTECTION		
072113	BATT INSULATION	2
DIVISION 08 – OPENINGS		
081100	STANDARD STEEL DOORS AND FRAMES	3
083323	OVERHEAD COILING DOORS	3
083324	HANGAR DOOR	11
087100	DOOR HARDWARE	5
DIVISION 09 – FINISHES		
092900	GYPSUM BOARD	3
099123	INTERIOR PAINTING	3
DIVISION 22 – PLUMBING		
220700	PLUMBING SYSTEMS PIPING INSULATION	2
221116	DOMESTIC WATER PIPING SYSTEMS	5
221316	SOIL WASTE PIPING SYSTEMS	3
224213	PLUMBING FIXTURES AND TRIM	2
DIVISION 23 - HEATING VENTILATING AND AIR CONDITIONING		
230100	GENERAL MECHANICAL REQUIREMENTS	4
230198	OWNER'S OPERATING AND MAINTENANCE MANUALS	3
230199	CORRECTIONS AND MAINTENANCE DURING THE WARRANTY PERIOD	2
230529	SUPPORTS, SLEEVES AND HANGARS	3
233400	HVLS CEILING FAN	5
238127	DUCTLESS SPLIT-SYSTEM AIR-CONDITIONERS	3
DIVISION 26 – ELECTRICAL		
260101	BASIC ELECTRICAL REQUIREMENTS	3
260102	CORRECTIONS DURING THE WARRANTY PERIOD	1
260103	OPERATING AND MAINTENANCE MANUALS	2
260104	CONTRACT QUALITY CONTROL	1
260105	SHOP DRAWINGS, COORDINATION DRAWINGS AND PRODUCT DATA	4
260106	PROJECT RECORD DOCUMENTS	2
260513	CONDUCTOR SYSTEMS	2
260526	ELECTRICAL GROUNDING	2
260529	SUPPORTS AND FASTENERS	1
260533.13	CONDUIT SYSTEMS	1
260533.16	PULL AND JUNCTION BOXES	2
260553	IDENTIFICATION	1

261216	DRY TYPE TRANSFORMER	1
261313	CIRCUIT BREAKER PANELBOARDS	1
261323	SAFETY SWITCHES	1
261600	POWER SERVICE ENTRANCE	1
265100	LUMINARIES	1

Site and Infrastructure Subgroup

DIVISION 31 - EARTHWORK

310000	GEO-TECHNICAL INVESTIGATION REPORTS	28
311000	SITE CLEARING	3
312000	EARTH MOVING	8
312319	DEWATERING	2
313116	TERMITE CONTROL	3

DIVISION 32 - EXTERIOR IMPROVEMENTS

321313	CONCRETE PAVING	6
321373	CONCRETE PAVING JOINT SEALANTS	3

DIVISION 33 - UTILITIES

330500	COMMON WORK RESULTS FOR UTILITIES	8
330641	REMOVING AND INSTALLING STORM DRAIN PIPE	2

END OF TABLE OF CONTENTS

JEFFERSON COUNTY ENGINEERING DEPARTMENT
JCSO HANGAR BUILDING

SECTION 011000 - SUMMARY

PART 1 - GENERAL

1.1 SUMMARY

A. Section includes:

1. Project Information
2. Work covered by Contract Documents.
3. Access to site.
4. Coordination with occupants.
5. Work restrictions
6. Specification and drawing conventions.

B. Related Section:

1. Division 01 Section "Temporary Facilities and Controls" for limitations and procedures governing temporary use of Owner's facilities.

1.2 PROJECT INFORMATION

A. Project Location: Jefferson County Engineering Department
JCSO Hangar Building
Jack Brooks Regional Airport
N. Hwy 69 Nederland
Beaumont, TX 77705

B. Owner: Jefferson County

1. Owner's Representative: Deputy Chief Clay Woodward, P.O. Box 3522, Beaumont, Texas 77704-3522.

C. Engineer: Heath Reynolds, PE, LJA Engineering, Inc., 905 Orleans Street, Beaumont, Texas 77701, 409-291-5362

D. Throughout the entirety of this manual, “Architect” can also refer to LJA Engineering, Inc.

1.3 WORK COVERED BY CONTRACT DOCUMENTS

A. The Work of the Project is defined by the Contract Documents and consists of the following:

Construction of a new 60’ x 80’ hangar (pre-engineered steel building), including site grading, site access and parking, concrete area paving, mechanical, electrical, and plumbing, and interior wood framing.

B. Type of Contract.

1. Project will be constructed under a single prime contract.

1.4 ACCESS TO SITE

A. General: Contractor shall have full use of Project site for construction operations during construction period. Contractor's use of Project site is limited only by Owner's right to perform work or to retain other contractors on portions of Project.

B. Use of Site: Limit use of Project site to work in areas indicated. Do not disturb portions of Project site beyond areas in which the Work is indicated.

1. Limits: Confine construction operations to areas indicated on site plans.
2. Limits: Limit site disturbance, including earthwork and clearing of vegetation, to 40 feet beyond building perimeter; 10 feet beyond surface walkways, patios, surface parking, and utilities less than 12 inches in diameter; 15 feet beyond primary roadway curbs and main utility branch trenches; and 25 feet beyond constructed areas with permeable surfaces (such as pervious paving areas, stormwater detention facilities, and playing fields) that require additional staging areas in order to limit compaction in the constructed area.
3. Driveways, Walkways and Entrances: Keep driveways, loading areas and entrances serving premises clear and available to Owner, Owner's employees, and emergency vehicles at all times. Do not use these areas for parking or storage of materials.

    a. Schedule deliveries to minimize use of driveways and entrances by construction operations.
    b. Schedule deliveries to minimize space and time requirements for storage of materials and equipment on-site.

1.5 COORDINATION WITH OCCUPANTS

A. Partial Owner Occupancy: Owner will occupy the premises during entire construction period, with the exception of areas under construction. Cooperate with Owner during construction operations to minimize conflicts and facilitate Owner usage. Perform the Work so as not to interfere with Owner's operations. Maintain existing exits unless otherwise indicated.

1. Maintain access to existing walkways, corridors, and other adjacent occupied or used facilities. Do not close or obstruct walkways, corridors, or other occupied or

used facilities without written permission from Owner and authorities having jurisdiction.
2. Provide not less than 48 hours notice to Owner of activities that will affect Owner's operations.

B. Owner Limited Occupancy of Completed Areas of Construction: Owner reserves the right to occupy and to place and install equipment in completed portions of the Work, prior to Substantial Completion of the Work, provided such occupancy does not interfere with completion of the Work. Such placement of equipment and limited occupancy shall not constitute acceptance of the total Work.

1. Architect will prepare a Certificate of Substantial Completion for each specific portion of the Work to be occupied prior to Owner acceptance of the completed Work.
2. Obtain a Certificate of Occupancy from authorities having jurisdiction before limited Owner occupancy.
3. Before limited Owner occupancy, mechanical and electrical systems shall be fully operational, and required tests and inspections shall be successfully completed. On occupancy, Owner will operate and maintain mechanical and electrical systems serving occupied portions of Work.
4. On occupancy, Owner will assume responsibility for maintenance and custodial service for occupied portions of Work.

1.6 WORK RESTRICTIONS

A. Work Restrictions, General: Comply with restrictions on construction operations.

1. Comply with limitations on use of public streets and other requirements of authorities having jurisdiction.

B. Existing Utility Interruptions: Do not interrupt utilities serving facilities occupied by Owner or others unless permitted under the following conditions and then only after providing temporary utility services according to requirements indicated:

1. Notify Architect not less than two days in advance of proposed utility interruptions.
2. Obtain Owner's written permission before proceeding with utility interruptions.

C. Noise, Vibration, and Odors: Coordinate operations that may result in high levels of noise and vibration, odors, or other disruption to Owner occupancy with Owner.

1. Notify Architect not less than two days in advance of proposed disruptive operations.
2. Obtain Owner's written permission before proceeding with disruptive operations.

D. Nonsmoking Building: Smoking is not permitted within the building or within 25 feet of entrances, operable windows, or outdoor air intakes.

E. Controlled Substances: Use of controlled substances on the Project site is not permitted

1.7 SPECIFICATION AND DRAWING CONVENTIONS

A. Specification Content: The Specifications use certain conventions for the style of language and the intended meaning of certain terms, words, and phrases when used in particular situations. These conventions are as follows:

1. Imperative mood and streamlined language are generally used in the Specifications. The words "shall," "shall be," or "shall comply with," depending on the context, are implied where a colon (:) is used within a sentence or phrase.
2. Specification requirements are to be performed by Contractor unless specifically stated otherwise.

B. Division 01 General Requirements: Requirements of Sections in Division 01 apply to the Work of all Sections in the Specifications.

C. Drawing Coordination: Requirements for materials and products identified on the Drawings are described in detail in the Specifications. One or more of the following are used on the Drawings to identify materials and products:

1. Terminology: Materials and products are identified by the typical generic terms used in the individual Specifications Sections.
2. Abbreviations: Materials and products are identified by abbreviations as shown on Drawings.
3. Keynoting: Materials and products are identified by reference keynotes referencing Specification Section numbers found in this Project Manual.

PART 2 - PRODUCTS (Not Used)

PART 3 - EXECUTION (Not Used)

END OF SECTION 011000

JEFFERSON COUNTY ENGINEERING DEPARTMENT
JCSO HANGAR BUILDING

SECTION 012500 - SUBSTITUTION PROCEDURES

PART 1 - GENERAL

1.1 SUMMARY

A. Section includes administrative and procedural requirements for substitutions.

B. Related Section:

1. Division 01 Section "Product Requirements" for requirements for submitting comparable product submittals for products by listed manufacturers.

1.2 DEFINITIONS

A. Substitutions: Changes in products, materials, equipment, and methods of construction from those required by the Contract Documents and proposed by Contractor.

1.3 SUBMITTALS

A. Substitution Requests: Submit three copies of each request for consideration. Identify product or fabrication or installation method to be replaced. Include Specification Section number and title and Drawing numbers and titles.

1. Substitution Request Form: Use facsimile of form provided in the Project Manual.
2. Documentation: Show compliance with requirements for substitutions and the following, as applicable:

a. Statement indicating why specified product or fabrication or installation cannot be provided, or why substitution is being requested.
b. Coordination information, including a list of changes or modifications needed to other parts of the Work and to construction performed by Owner and separate contractors, that will be necessary to accommodate proposed substitution.
c. Detailed comparison of significant qualities of proposed substitution with those of the Work specified. Include annotated copy of applicable specification section. Significant qualities may include attributes such as performance, weight, size, durability, visual effect, sustainable design characteristics, warranties, and specific features and requirements indicated. Indicate deviations, if any, from the Work specified.
d. Product Data, including drawings and descriptions of products and fabrication and installation procedures.
e. Samples, where applicable or requested.
f. Certificates and qualification data, where applicable or requested.

g. List of similar installations for completed projects with project names and addresses and names and addresses of architects and owners.
h. Material test reports from a qualified testing agency indicating and interpreting test results for compliance with requirements indicated.
i. Research reports evidencing compliance with building code in effect for Project, from ICC-ES.
j. Detailed comparison of Contractor's construction schedule using proposed substitution with products specified for the Work, including effect on the overall Contract Time. If specified product or method of construction cannot be provided within the Contract Time, include letter from manufacturer, on manufacturer's letterhead, stating date of receipt of purchase order, lack of availability, or delays in delivery.
k. Cost information, including a proposal of change, if any, in the Contract Sum.
l. Contractor's certification that proposed substitution complies with requirements in the Contract Documents except as indicated in substitution request, is compatible with related materials, and is appropriate for applications indicated.
m. Contractor's waiver of rights to additional payment or time that may subsequently become necessary because of failure of proposed substitution to produce indicated results.

3. Architect's Action: If necessary, Architect will request additional information or documentation for evaluation within seven days of receipt of a request for substitution. Architect will notify Contractor of acceptance or rejection of proposed substitution within 15 days of receipt of request, or seven days of receipt of additional information or documentation, whichever is later.

a. Forms of Acceptance: Change Order, Construction Change Directive, or Architect's Supplemental Instructions for minor changes in the Work.
b. Use product specified if Architect does not issue a decision on use of a proposed substitution within time allocated.

1.4 QUALITY ASSURANCE

A. Compatibility of Substitutions: Investigate and document compatibility of proposed substitution with related products and materials. Engage qualified testing agency to perform compatibility tests recommended by manufacturers.

PART 2 - PRODUCTS

2.1 SUBSTITUTIONS

A. Substitutions for Cause: Submit requests for substitution immediately upon discovery of need for change, but not later than 15 days prior to time required for preparation and review of related submittals.

1. Conditions: Architect will consider Contractor's request for substitution when the following conditions are satisfied:

    a. Requested substitution is consistent with the Contract Documents and will produce indicated results.
    b. Requested substitution will not adversely affect Contractor's construction schedule.
    c. Requested substitution has received necessary approvals of authorities having jurisdiction.
    d. Requested substitution is compatible with other portions of the Work.
    e. Requested substitution has been coordinated with other portions of the Work.
    f. Requested substitution provides specified warranty.
    g. If requested substitution involves more than one contractor, requested substitution has been coordinated with other portions of the Work, is uniform and consistent, is compatible with other products, and is acceptable to all contractors involved.

B. Substitutions for Convenience: Architect will consider requests for substitution if received within 60 days after the Notice to Proceed.

1. Conditions: Architect will consider Contractor's request for substitution when the following conditions are satisfied:

    a. Requested substitution offers Owner a substantial advantage in cost, time, energy conservation, or other considerations, after deducting additional responsibilities Owner must assume. Owner's additional responsibilities may include compensation to Architect for redesign and evaluation services, increased cost of other construction by Owner, and similar considerations.
    b. Requested substitution does not require extensive revisions to the Contract Documents.
    c. Requested substitution is consistent with the Contract Documents and will produce indicated results.
    d. Requested substitution will not adversely affect Contractor's construction schedule.
    e. Requested substitution has received necessary approvals of authorities having jurisdiction.
    f. Requested substitution is compatible with other portions of the Work.
    g. Requested substitution has been coordinated with other portions of the Work.
    h. Requested substitution provides specified warranty.
    i. If requested substitution involves more than one contractor, requested substitution has been coordinated with other portions of the Work, is uniform and consistent, is compatible with other products, and is acceptable to all contractors involved.

PART 3 - EXECUTION (Not Used)

END OF SECTION 012500

JEFFERSON COUNTY ENGINEERING DEPARTMENT
JCSO HANGAR BUILDING

SECTION 012600 - CONTRACT MODIFICATION PROCEDURES

PART 1 - GENERAL

1.1 SUMMARY

A. This Section specifies administrative and procedural requirements for handling and processing Contract modifications.

1.2 MINOR CHANGES IN THE WORK

A. Architect will issue supplemental instructions authorizing Minor Changes in the Work, not involving adjustment to the Contract Sum or the Contract Time on EJCDC forms where applicable.

1.3 PROPOSAL REQUESTS

A. Owner-Initiated Proposal Requests: Architect will issue a detailed description of proposed changes in the Work that may require adjustment to the Contract Sum or the Contract Time. If necessary, the description will include supplemental or revised Drawings and Specifications.

1. Proposal Requests issued by Architect are for information only. Do not consider them instructions either to stop work in progress or to execute the proposed change.
2. Within time specified in Proposal Request after receipt of Proposal Request, submit a quotation estimating cost adjustments to the Contract Sum and the Contract Time necessary to execute the change.

    a. Include a list of quantities of products required or eliminated and unit costs, with total amount of purchases and credits to be made. If requested, furnish survey data to substantiate quantities.
    b. Indicate applicable taxes, delivery charges, equipment rental, and amounts of trade discounts.
    c. Include costs of labor and supervision directly attributable to the change.
    d. Include an updated Contractor's Construction Schedule that indicates the effect of the change, including, but not limited to, changes in activity duration, start and finish times, and activity relationship. Use available total float before requesting an extension of the Contract Time.

B. Contractor-Initiated Proposals: If latent or unforeseen conditions require modifications to the Contract, Contractor may propose changes by submitting a request for a change to Architect.

1. Include a statement outlining reasons for the change and the effect of the change on the Work. Provide a complete description of the proposed change. Indicate the effect of the proposed change on the Contract Sum and the Contract Time.
2. Include a list of quantities of products required or eliminated and unit costs, with total amount of purchases and credits to be made. If requested, furnish survey data to substantiate quantities.
3. Indicate applicable taxes, delivery charges, equipment rental, and amounts of trade discounts.
4. Include costs of labor and supervision directly attributable to the change.
5. Include an updated Contractor's Construction Schedule that indicates the effect of the change, including, but not limited to, changes in activity duration, start and finish times, and activity relationship. Use available total float before requesting an extension of the Contract Time.
6. Comply with requirements in Division 01 Section "Product Requirements" if the proposed change requires substitution of one product or system for product or system specified.

C. Proposal Request Form: Use EJCDC forms.

1.4 ALLOWANCES

A. Allowance Adjustment: To adjust allowance amounts, base each Change Order proposal on the difference between purchase amount and the allowance, multiplied by final measurement of work-in-place. If applicable, include reasonable allowances for cutting losses, tolerances, mixing wastes, normal product imperfections, and similar margins.

1. Include installation costs in purchase amount only where indicated as part of the allowance.
2. If requested, prepare explanation and documentation to substantiate distribution of overhead costs and other margins claimed.
3. Submit substantiation of a change in scope of work, if any, claimed in Change Orders related to unit-cost allowances.
4. Owner reserves the right to establish the quantity of work-in-place by independent quantity survey, measure, or count.

B. Submit claims for increased costs because of a change in scope or nature of the allowance described in the Contract Documents, whether for the Purchase Order amount or Contractor's handling, labor, installation, overhead, and profit. Submit claims within 7 days of receipt of the Change Order or Construction Change Directive authorizing work to proceed. Owner will reject claims submitted later than 21 days after such authorization.

1. Do not include Contractor's or subcontractor's indirect expense in the Change Order cost amount unless it is clearly shown that the nature or extent of work has changed from what could have been foreseen from information in the Contract Documents.
2. No change to Contractor's indirect expense is permitted for selection of higher- or lower-priced materials or systems of the same scope and nature as originally indicated.

1.5 CHANGE ORDER PROCEDURES

A. On Owner's approval of a Proposal Request, Architect will issue a Change Order for signatures of Owner and Contractor on EJCDC forms.

1.6 CONSTRUCTION CHANGE DIRECTIVE

A. Construction Change Directive: Architect may issue a Construction Change Directive on EJCDC forms. Construction Change Directive instructs Contractor to proceed with a change in the Work, for subsequent inclusion in a Change Order.

1. Construction Change Directive contains a complete description of change in the Work. It also designates method to be followed to determine change in the Contract Sum or the Contract Time.

B. Documentation: Maintain detailed records on a time and material basis of work required by the Construction Change Directive.

1. After completion of change, submit an itemized account and supporting data necessary to substantiate cost and time adjustments to the Contract.

PART 2 - PRODUCTS (Not Used)

PART 3 - EXECUTION (Not Used)

END OF SECTION 012600

JEFFERSON COUNTY ENGINEERING DEPARTMENT
JCSO HANGAR BUILDING

SECTION 012900 - PAYMENT PROCEDURES

PART 1 - GENERAL

1.1 SUMMARY

A. This Section specifies administrative and procedural requirements necessary to prepare and process Applications for Payment.

1.2 SCHEDULE OF VALUES

A. Coordination: Coordinate preparation of the Schedule of Values with preparation of Contractor's Construction Schedule.

1. Correlate line items in the Schedule of Values with other required administrative forms and schedules, including Application for Payment forms with Continuation Sheets, Submittals Schedule and Contractor's Construction Schedule.
2. Submit the Schedule of Values to Architect at earliest possible date but no later than seven days before the date scheduled for submittal of initial Applications for Payment.
3. Subschedules: Where the Work is separated into phases requiring separately phased payments, provide subschedules showing values correlated with each phase of payment.

B. Format and Content: Use the Project Construction Manual table of contents as a guide to establish line items for the Schedule of Values. Provide at least one line item for each Specification Section.

1. Identification: Include the following Project identification on the Schedule of Values:

    a. Project name and location.
    b. Name of Engineering Firm.
    c. Engineer's project number.
    d. Contractor's name and address.
    e. Date of submittal.

2. Submit draft of EJCDC forms.
3. Provide a breakdown of the Contract Sum in enough detail to facilitate continued evaluation of Applications for Payment and progress reports. Coordinate with the Project Construction Manual table of contents. Provide several line items for principal subcontract amounts, where appropriate.
4. Round amounts to nearest whole dollar; total shall equal the Contract Sum.
5. Provide a separate line item in the Schedule of Values for each part of the Work where Applications for Payment may include materials or equipment purchased or fabricated and stored, but not yet installed.

6. Provide separate line items in the Schedule of Values for initial cost of materials, for each subsequent stage of completion, and for total installed value of that part of the Work.
7. Allowances: Provide a separate line item in the Schedule of Values for each allowance. Show line-item value of unit-cost allowances, as a product of the unit cost, multiplied by measured quantity. Use information indicated in the Contract Documents to determine quantities.
8. Each item in the Schedule of Values and Applications for Payment shall be complete. Include total cost and proportionate share of general overhead and profit for each item.

    a. Temporary facilities and other major cost items that are not direct cost of actual work-in-place may be shown either as separate line items in the Schedule of Values or distributed as general overhead expense, at Contractor's option.

9. Schedule Updating: Update and resubmit the Schedule of Values before the next Applications for Payment when Change Orders or Construction Change Directives result in a change in the Contract Sum.

1.3 APPLICATIONS FOR PAYMENT

A. Each Application for Payment shall be consistent with previous applications and payments as certified by Architect and paid for by Owner.

1. Initial Application for Payment, Application for Payment at time of Substantial Completion, and final Application for Payment involve additional requirements.

B. Payment Application Times: The date for each progress payment is indicated in the Agreement between Owner and Contractor. The period of construction Work covered by each Application for Payment is the period indicated in the Agreement.

C. Payment Application Times: Progress payments shall be submitted to Architect by the 23rd of the month. The period covered by each Application for Payment is one month, ending on the last day of the month.

D. Payment Application Forms: EJCDC forms as form for Applications for Payment.

E. Application Preparation: Complete every entry on form. Notarize and execute by a person authorized to sign legal documents on behalf of Contractor. Architect will return incomplete applications without action.

1. Entries shall match data on the Schedule of Values and Contractor's Construction Schedule. Use updated schedules if revisions were made.
2. Include amounts of Change Orders and Construction Change Directives issued before last day of construction period covered by application.

F. Transmittal: Submit 3 signed and notarized original copies of each Application for Payment to Architect by a method ensuring receipt within 24 hours. One copy shall include waivers of lien and similar attachments if required.

1. Transmit each copy with a transmittal form listing attachments and recording appropriate information about application.

G. Waivers of Mechanic's Lien: With each Application for Payment, submit waivers of mechanic's lien from every entity who is lawfully entitled to file a mechanic's lien arising out of the Contract and related to the Work covered by the payment.

1. Submit partial waivers on each item for amount requested in previous application, after deduction for retainage, on each item.
2. When an application shows completion of an item, submit final or full waivers.
3. Owner reserves the right to designate which entities involved in the Work must submit waivers.
4. Waiver Forms: Submit waivers of lien on forms, executed in a manner acceptable to Owner.

H. Initial Application for Payment: Administrative actions and submittals that must precede or coincide with submittal of first Application for Payment include the following:

1. List of subcontractors.
2. Schedule of Values.
3. Contractor's Construction Schedule (preliminary if not final).
4. Schedule of unit prices.
5. Submittals Schedule (preliminary if not final).
6. List of Contractor's staff assignments.
7. List of Contractor's principal consultants.
8. Copies of building permits.
9. Copies of authorizations and licenses from authorities having jurisdiction for performance of the Work.
10. Initial progress report.
11. Report of preconstruction conference.
12. Certificates of insurance and insurance policies.

I. Application for Payment at Substantial Completion: After issuing the Certificate of Substantial Completion, submit an Application for Payment showing 100 percent completion for portion of the Work claimed as substantially complete.

1. Include documentation supporting claim that the Work is substantially complete and a statement showing an accounting of changes to the Contract Sum.
2. This application shall reflect Certificates of Partial Substantial Completion issued previously for Owner occupancy of designated portions of the Work.

J. Final Payment Application: Submit final Application for Payment with releases and supporting documentation not previously submitted and accepted, including, but not limited, to the following:

1. Evidence of completion of Project closeout requirements.
2. Insurance certificates for products and completed operations where required and proof that taxes, fees, and similar obligations were paid.
3. Updated final statement, accounting for final changes to the Contract Sum.
4. Evidence that claims have been settled.

5. Final meter readings for utilities, a measured record of stored fuel, and similar data as of date of Substantial Completion or when Owner took possession of and assumed responsibility for corresponding elements of the Work.
6. Final, liquidated damages settlement statement.

PART 2 - PRODUCTS (Not Used)

PART 3 - EXECUTION (Not Used)

END OF SECTION 012900

JEFFERSON COUNTY ENGINEERING DEPARTMENT
JCSO HANGAR BUILDING

SECTION 013100 - PROJECT MANAGEMENT AND COORDINATION

PART 1 - GENERAL

1.1 SUMMARY

A. This Section includes administrative provisions for coordinating construction operations on Project including, but not limited to, the following:

1. Coordination Drawings.
2. Project meetings.
3. Requests for Interpretation (RFIs).

B. See Division 01 Section "Execution" for procedures for coordinating general installation and field-engineering services, including establishment of benchmarks and control points.

1.2 DEFINITIONS

A. RFI: Request from Contractor seeking interpretation or clarification of the Contract Documents.

1.3 COORDINATION

A. Coordination: Coordinate construction operations included in different Sections of the Specifications to ensure efficient and orderly installation of each part of the Work. Coordinate construction operations, included in different Sections, that depend on each other for proper installation, connection, and operation.

1. Schedule construction operations in sequence required to obtain the best results where installation of one part of the Work depends on installation of other components, before or after its own installation.
2. Coordinate installation of different components with other contractors to ensure maximum accessibility for required maintenance, service, and repair.
3. Make adequate provisions to accommodate items scheduled for later installation.
4. Where availability of space is limited, coordinate installation of different components to ensure maximum performance and accessibility for required maintenance, service, and repair of all components, including mechanical and electrical.

B. Prepare memoranda for distribution to each party involved, outlining special procedures required for coordination. Include such items as required notices, reports, and list of attendees at meetings.

1. Prepare similar memoranda for Owner and separate contractors if coordination of their Work is required.

C. Administrative Procedures: Coordinate scheduling and timing of required administrative procedures with other construction activities and activities of other contractors to avoid conflicts and to ensure orderly progress of the Work. Such administrative activities include, but are not limited to, the following:

1. Preparation of Contractor's Construction Schedule.
2. Preparation of the Schedule of Values.
3. Installation and removal of temporary facilities and controls.
4. Delivery and processing of submittals.
5. Progress meetings.
6. Preinstallation conferences.
7. Project closeout activities.
8. Startup and adjustment of systems.
9. Project closeout activities.

1.4 SUBMITTALS

A. Coordination Drawings: Prepare Coordination Drawings if limited space availability necessitates maximum utilization of space for efficient installation of different components or if coordination is required for installation of products and materials fabricated by separate entities.

1. Content: Project-specific information, drawn accurately to scale. Do not base Coordination Drawings on reproductions of the Contract Documents or standard printed data. Include the following information, as applicable:

   a. Indicate functional and spatial relationships of components of architectural, structural, civil, mechanical, and electrical systems.
   b. Indicate dimensions shown on the Contract Drawings and make specific note of dimensions that appear to be in conflict with submitted equipment and minimum clearance requirements. Provide alternate sketches to Architect for resolution of such conflicts. Minor dimension changes and difficult installations will not be considered changes to the Contract.

2. Sheet Size: At least 8-1/2 by 11 inches but no larger than 30 by 40 inches.
3. Number of Copies: Submit two opaque copies of each submittal. Architect will return one copy.
4. Refer to individual Sections for Coordination Drawing requirements for Work in those Sections.

1.5 PROJECT MEETINGS

A. General: Schedule and conduct meetings and conferences at Project site, unless otherwise indicated.

1. Attendees: Inform participants and others involved, and individuals whose presence is required, of date and time of each meeting. Notify Owner and Architect of scheduled meeting dates and times.

2. Agenda: Prepare the meeting agenda. Distribute the agenda to all invited attendees.
3. Minutes: Record significant discussions and agreements achieved. Distribute the meeting minutes to everyone concerned, including Owner and Architect, within three days of the meeting.

B. Preconstruction Conference: Schedule a preconstruction conference before starting construction, at a time convenient to Owner and Architect, but no later than 15 days after execution of the Agreement. Hold the conference at Project site or another convenient location. Conduct the meeting to review responsibilities and personnel assignments.

1. Attendees: Authorized representatives of Owner, Architect, and their consultants; Contractor and its superintendent; major subcontractors; suppliers; and other concerned parties shall attend the conference. All participants at the conference shall be familiar with Project and authorized to conclude matters relating to the Work.
2. Agenda: Discuss items of significance that could affect progress, including the following:

    a. Tentative construction schedule.
    b. Phasing.
    c. Critical work sequencing and long-lead items.
    d. Designation of key personnel and their duties.
    e. Procedures for processing field decisions and Change Orders.
    f. Procedures for RFIs.
    g. Procedures for testing and inspecting.
    h. Procedures for processing Applications for Payment.
    i. Distribution of the Contract Documents.
    j. Submittal procedures.
    k. LEED requirements.
    l. Preparation of Record Documents.
    m. Use of the premises.
    n. Work restrictions.
    o. Owner's occupancy requirements.
    p. Responsibility for temporary facilities and controls.
    q. Construction waste management and recycling.
    r. Parking availability.
    s. Office, work, and storage areas.
    t. Equipment deliveries and priorities.
    u. First aid.
    v. Security.
    w. Progress cleaning.
    x. Working hours.

3. Minutes: Record and distribute meeting minutes.

C. Preinstallation Conferences: Conduct a preinstallation conference at Project site before each construction activity that requires coordination with other construction.

1. Attendees: Installer and representatives of manufacturers and fabricators involved in or affected by the installation and its coordination or integration with other materials and installations that have preceded or will follow, shall attend the meeting. Advise Architect of scheduled meeting dates.
2. Agenda: Review progress of other construction activities and preparations for the particular activity under consideration, including requirements for the following:

    a. The Contract Documents.
    b. Options.
    c. Related RFIs.
    d. Related Change Orders.
    e. Purchases.
    f. Deliveries.
    g. Submittals.
    h. Review of mockups.
    i. Possible conflicts.
    j. Compatibility problems.
    k. Time schedules.
    l. Weather limitations.
    m. Manufacturer's written recommendations.
    n. Warranty requirements.
    o. Compatibility of materials.
    p. Acceptability of substrates.
    q. Temporary facilities and controls.
    r. Space and access limitations.
    s. Regulations of authorities having jurisdiction.
    t. Testing and inspecting requirements.
    u. Installation procedures.
    v. Coordination with other work.
    w. Required performance results.
    x. Protection of adjacent work.
    y. Protection of construction and personnel.

3. Record significant conference discussions, agreements, and disagreements, including required corrective measures and actions.
4. Reporting: Distribute minutes of the meeting to each party present and to parties who should have been present.
5. Do not proceed with installation if the conference cannot be successfully concluded. Initiate whatever actions are necessary to resolve impediments to performance of the Work and reconvene the conference at earliest feasible date.

D. Progress Meetings: Conduct progress meetings when deemed necessary. Coordinate dates of meetings with preparation of payment requests.

1. Attendees: In addition to representatives of Owner and Architect, each contractor, subcontractor, supplier, and other entity concerned with current progress or involved in planning, coordination, or performance of future activities shall be represented at these meetings. All participants at the conference shall be familiar with Project and authorized to conclude matters relating to the Work.

2. Agenda: Review and correct or approve minutes of previous progress meeting. Review other items of significance that could affect progress. Include topics for discussion as appropriate to status of Project.

    a. Contractor's Construction Schedule: Review progress since the last meeting. Determine whether each activity is on time, ahead of schedule, or behind schedule, in relation to Contractor's Construction Schedule. Determine how construction behind schedule will be expedited; secure commitments from parties involved to do so. Discuss whether schedule revisions are required to ensure that current and subsequent activities will be completed within the Contract Time.

        1) Review schedule for next period.

    b. Review present and future needs of each entity present, including the following:

        1) Interface requirements.
        2) Sequence of operations.
        3) Status of submittals.
        4) Deliveries.
        5) Off-site fabrication.
        6) Access.
        7) Site utilization.
        8) Temporary facilities and controls.
        9) Work hours.
        10) Hazards and risks.
        11) Progress cleaning.
        12) Quality and work standards.
        13) Status of correction of deficient items.
        14) Field observations.
        15) RFIs.
        16) Status of proposal requests.
        17) Pending changes.
        18) Status of Change Orders.
        19) Pending claims and disputes.
        20) Documentation of information for payment requests.

3. Minutes: Record the meeting minutes.
4. Reporting: Distribute minutes of the meeting to each party present and to parties who should have been present.

    a. Schedule Updating: Revise Contractor's Construction Schedule after each progress meeting where revisions to the schedule have been made or recognized. Issue revised schedule concurrently with the report of each meeting.

1.6 REQUESTS FOR INTERPRETATION (RFIs)

A. Procedure: Immediately on discovery of the need for interpretation of the Contract Documents, and if not possible to request interpretation at Project meeting, prepare and submit an RFI in the form specified.

1. RFIs shall originate with Contractor. RFIs submitted by entities other than Contractor will be returned with no response.
2. Coordinate and submit RFIs in a prompt manner so as to avoid delays in Contractor's work or work of subcontractors.

B. Content of the RFI: Include a detailed, legible description of item needing interpretation and the following:

1. Project name.
2. Date.
3. Name of Contractor.
4. Name of Engineer.
5. RFI number, numbered sequentially.
6. Specification Section number and title and related paragraphs, as appropriate.
7. Drawing number and detail references, as appropriate.
8. Field dimensions and conditions, as appropriate.
9. Contractor's suggested solution(s). If Contractor's solution(s) impact the Contract Time or the Contract Sum, Contractor shall state impact in the RFI.
10. Contractor's signature.
11. Attachments: Include drawings, descriptions, measurements, photos, Product Data, Shop Drawings, and other information necessary to fully describe items needing interpretation.

C. Hard-Copy RFIs:

1. Identify each page of attachments with the RFI number and sequential page number.

D. Architect's Action: Architect will review each RFI, determine action required, and return it. Allow seven working days for Architect's response for each RFI. RFIs received after 1:00 p.m. will be considered as received the following working day.

1. The following RFIs will be returned without action:

a. Requests for approval of submittals.
b. Requests for approval of substitutions.
c. Requests for coordination information already indicated in the Contract Documents.
d. Requests for adjustments in the Contract Time or the Contract Sum.
e. Requests for interpretation of Architect's actions on submittals.
f. Incomplete RFIs or RFIs with numerous errors.

2. Architect's action may include a request for additional information, in which case Architect's time for response will start again.

3. Architect's action on RFIs that may result in a change to the Contract Time or the Contract Sum may be eligible for Contractor to submit Change Proposal according to Division 01 Section "Contract Modification Procedures."

    a. If Contractor believes the RFI response warrants change in the Contract Time or the Contract Sum, notify Architect in writing within 10 days of receipt of the RFI response.

E. On receipt of Architect's action, update the RFI log and immediately distribute the RFI response to affected parties. Review response and notify Architect within seven days if Contractor disagrees with response.

F. RFI Log: Prepare, maintain, and submit a tabular log of RFIs organized by the RFI number. Submit log weekly, including the following:

1. Project name.
2. Name and address of Contractor.
3. Name and address of Architect.
4. RFI number including RFIs that were dropped and not submitted.
5. RFI description.
6. Date the RFI was submitted.
7. Date Architect's response was received.
8. Identification of related Minor Change in the Work, Construction Change Directive, and Proposal Request, as appropriate.
9. Identification of related Field Order, Work Change Directive, and Proposal Request, as appropriate.

PART 2 - PRODUCTS (Not Used)

PART 3 - EXECUTION (Not Used)

END OF SECTION 013100

JEFFERSON COUNTY ENGINEERING DEPARTMENT
JCSO HANGAR BUILDING

SECTION 013200 - CONSTRUCTION PROGRESS DOCUMENTATION

PART 1 - GENERAL

1.1 SUMMARY

A. This Section includes administrative and procedural requirements for documenting the progress of construction during performance of the Work, including the following:

1. Contractor's Construction Schedule.
2. Submittals Schedule.
3. Daily construction reports.
4. Field condition reports.

B. See Division 01 Section "Payment Procedures" for submitting the Schedule of Values.

1.2 DEFINITIONS

A. Activity: A discrete part of a project that can be identified for planning, scheduling, monitoring, and controlling the construction project. Activities included in a construction schedule consume time and resources.

1. Critical activities are activities on the critical path. They must start and finish on the planned early start and finish times.
2. Predecessor Activity: An activity that precedes another activity in the network.
3. Successor Activity: An activity that follows another activity in the network.

B. CPM: Critical path method, which is a method of planning and scheduling a construction project where activities are arranged based on activity relationships. Network calculations determine when activities can be performed and the critical path of Project.

C. Critical Path: The longest connected chain of interdependent activities through the network schedule that establishes the minimum overall Project duration and contains no float.

D. Float: The measure of leeway in starting and completing an activity.

1. Float time is not for the exclusive use or benefit of either Owner or Contractor, but is a jointly owned, expiring Project resource available to both parties as needed to meet schedule milestones and Contract completion date.

E. Fragnet: A partial or fragmentary network that breaks down activities into smaller activities for greater detail.

F. Major Area: A story of construction, a separate building, or a similar significant construction element.

1.3 SUBMITTALS

A. Submittals Schedule: Submit three copies of schedule. Arrange the following information in a tabular format:

1. Scheduled date for first submittal.
2. Specification Section number and title.
3. Submittal category (action or informational).
4. Name of subcontractor.
5. Description of the Work covered.
6. Scheduled date for Architect's final release or approval.

B. Contractor's Construction Schedule: Submit two opaque copies of initial schedule, large enough to show entire schedule for entire construction period.

1. Submit an electronic copy of schedule, using software indicated, on CD-R, and labeled to comply with requirements for submittals. Include type of schedule (Initial or Updated) and date on label.

C. Daily Construction Reports: Submit three copies at monthly intervals.

D. Field Condition Reports: Submit three copies at time of discovery of differing conditions.

1.4 COORDINATION

A. Coordinate preparation and processing of schedules and reports with performance of construction activities and with scheduling and reporting of separate contractors.

B. Coordinate Contractor's Construction Schedule with the Schedule of Values, list of subcontracts, Submittals Schedule, progress reports, payment requests, and other required schedules and reports.

1. Secure time commitments for performing critical elements of the Work from parties involved.
2. Coordinate each construction activity in the network with other activities and schedule them in proper sequence.

PART 2 - PRODUCTS

2.1 SUBMITTALS SCHEDULE

A. Preparation: Submit a schedule of submittals, arranged in chronological order by dates required by construction schedule. Include time required for review, resubmittal, ordering, manufacturing, fabrication, and delivery when establishing dates.

1. Coordinate Submittals Schedule with list of subcontracts, the Schedule of Values, and Contractor's Construction Schedule.

2. Submit concurrently with the first complete submittal of Contractor's Construction Schedule.

2.2 CONTRACTOR'S CONSTRUCTION SCHEDULE, GENERAL

A. Time Frame: Extend schedule from date established for the Notice to Proceed to date of Final Completion.

1. Contract completion date shall not be changed by submission of a schedule that shows an early completion date, unless specifically authorized by Change Order.

B. Activities: Treat each story or separate area as a separate numbered activity for each principal element of the Work. Comply with the following:

1. Activity Duration: Define activities so no activity is longer than 20 days, unless specifically allowed by Engineer.
2. Procurement Activities: Include procurement process activities for the following long lead items and major items, requiring a cycle of more than 60 days, as separate activities in schedule. Procurement cycle activities include, but are not limited to, submittals, approvals, purchasing, fabrication, and delivery.
3. Submittal Review Time: Include review and resubmittal times indicated in Division 01 Section "Submittal Procedures" in schedule. Coordinate submittal review times in Contractor's Construction Schedule with Submittals Schedule.
4. Startup and Testing Time: Include not less than 7 days for startup and testing.
5. Substantial Completion: Indicate completion in advance of date established for Substantial Completion, and allow time for Engineer's administrative procedures necessary for certification of Substantial Completion.

C. Constraints: Include constraints and work restrictions indicated in the Contract Documents and as follows in schedule, and show how the sequence of the Work is affected.

1. Phasing: Arrange list of activities on schedule by phase.
2. Work under More Than One Contract: Include a separate activity for each contract.
3. Work by Owner: Include a separate activity for each portion of the Work performed by Owner.
4. Work Restrictions: Show the effect of the following items on the schedule:

    a. Coordination with existing construction.
    b. Limitations of continued occupancies.
    c. Uninterruptible services.
    d. Partial occupancy before Substantial Completion.
    e. Use of premises restrictions.
    f. Provisions for future construction.
    g. Seasonal variations.
    h. Environmental control.

5. Work Stages: Indicate important stages of construction for each major portion of the Work.

D. Milestones: Include milestones indicated in the Contract Documents in schedule, including, but not limited to, the Notice to Proceed, Substantial Completion, and Final Completion.

E. Contract Modifications: For each proposed contract modification and concurrent with its submission, prepare a time-impact analysis using fragnets to demonstrate the effect of the proposed change on the overall project schedule.

PART 3 - EXECUTION

3.1 CONTRACTOR'S CONSTRUCTION SCHEDULE

A. Contractor's Construction Schedule Updating: At monthly intervals, update schedule to reflect actual construction progress and activities. Issue schedule one week before each regularly scheduled progress meeting.

1. Revise schedule immediately after each meeting or other activity where revisions have been recognized or made. Issue updated schedule concurrently with the report of each such meeting.
2. Include a report with updated schedule that indicates every change, including, but not limited to, changes in logic, durations, actual starts and finishes, and activity durations.
3. As the Work progresses, indicate Actual Completion percentage for each activity.

B. Distribution: Distribute copies of approved schedule to Architect Owner, separate contractors, testing and inspecting agencies, and other parties identified by Contractor with a need-to-know schedule responsibility.

1. Post copies in Project meeting rooms and temporary field offices.
2. When revisions are made, distribute updated schedules to the same parties and post in the same locations. Delete parties from distribution when they have completed their assigned portion of the Work and are no longer involved in performance of construction activities.

END OF SECTION 013200

JEFFERSON COUNTY ENGINEERING DEPARTMENT
JCSO HANGAR BUILDING

SECTION 013300 - SUBMITTAL PROCEDURES

PART 1 - GENERAL

1.1 SUMMARY

A. This Section includes administrative and procedural requirements for submitting Shop Drawings, Product Data, Samples, and other submittals.

B. See Division 01 Section "Construction Progress Documentation" for submitting schedules and reports, including Contractor's Construction Schedule.

C. See Division 01 Section "Quality Requirements" for submitting test and inspection reports.

D. See Division 01 Section "Closeout Procedures" for submitting warranties.

E. See Division 01 Section "Project Record Documents" for submitting Record Drawings, Record Specifications, and Record Product Data.

F. See Division 01 Section "Operation and Maintenance Data" for submitting operation and maintenance manuals.

1.2 DEFINITIONS

A. Action Submittals: Written and graphic information that requires Architect's responsive action.

B. Informational Submittals: Written information that does not require Architect's responsive action. Submittals may be rejected for not complying with requirements.

1.3 SUBMITTAL PROCEDURES

A. Coordination: Coordinate preparation and processing of submittals with performance of construction activities.

1. Coordinate each submittal with fabrication, purchasing, testing, delivery, other submittals, and related activities that require sequential activity.
2. Coordinate transmittal of different types of submittals for related parts of the Work so processing will not be delayed because of need to review submittals concurrently for coordination.

    a. Architect reserves the right to withhold action on a submittal requiring coordination with other submittals until related submittals are received.

B. Submittals Schedule: Comply with requirements in Division 01 Section "Construction Progress Documentation" for list of submittals and time requirements for scheduled performance of related construction activities.

C. Processing Time: Allow enough time for submittal review, including time for resubmittals, as follows. Time for review shall commence on Architect's receipt of submittal. No extension of the Contract Time will be authorized because of failure to transmit submittals enough in advance of the Work to permit processing, including resubmittals.

1. Initial Review: Allow 15 days for initial review of each submittal. Allow additional time if coordination with subsequent submittals is required. Architect will advise Contractor when a submittal being processed must be delayed for coordination.
2. Intermediate Review: If intermediate submittal is necessary, process it in same manner as initial submittal.
3. Resubmittal Review: Allow 15 days for review of each resubmittal.

D. Identification: Place a permanent label or title block on each submittal for identification.

1. Indicate name of firm or entity that prepared each submittal on label or title block.
2. Provide a space approximately 6 by 8 inches (150 by 200 mm) on label or beside title block to record Contractor's review and approval markings and action taken by Architect.
3. Include the following information on label for processing and recording action taken:

    a. Project name.
    b. Date.
    c. Name and address of Architect.
    d. Name and address of Contractor.
    e. Name and address of subcontractor.
    f. Name and address of supplier.
    g. Name of manufacturer.
    h. Submittal number or other unique identifier, including revision identifier.

        1) Submittal number shall use Specification Section number followed by a decimal point and then a sequential number (e.g., 061000.01). Resubmittals shall include an alphabetic suffix after another decimal point (e.g., 061000.01.A).

    i. Number and title of appropriate Specification Section.
    j. Drawing number and detail references, as appropriate.
    k. Location(s) where product is to be installed, as appropriate.
    l. Other necessary identification.

E. Deviations: Highlight, encircle, or otherwise specifically identify deviations from the Contract Documents on submittals.

F. Additional Copies: Unless additional copies are required for final submittal, and unless Architect observes noncompliance with provisions in the Contract Documents, initial submittal may serve as final submittal.

1. Additional copies submitted for maintenance manuals will be marked with action taken and will be returned.

G. Transmittal: Package each submittal individually and appropriately for transmittal and handling. Transmit each submittal using a transmittal form. Architect will return submittals, without review, received from sources other than Contractor.

1. Transmittal Form: Use approved Contractor Transmittal Form.

H. Resubmittals: Make resubmittals in same form and number of copies as initial submittal.

1. Note date and content of previous submittal.
2. Note date and content of revision in label or title block and clearly indicate extent of revision.
3. Resubmit submittals until they are marked approved on Architect's Submittal review form attached at the end of this section.

I. Distribution: Furnish copies of final submittals to manufacturers, subcontractors, suppliers, fabricators, installers, authorities having jurisdiction, and others as necessary for performance of construction activities. Show distribution on transmittal forms.

J. Use for Construction: Use only final submittals with mark indicating approval taken by Architect.

1.4 CONTRACTOR'S USE OF ARCHITECT'S CAD FILES

A. General: At Contractor's written request, copies of Architect's CAD files will be provided to Contractor for Contractor's use in connection with Project, subject to the following conditions:

1. Approval by the Architect and Owner.

PART 2 - PRODUCTS

2.1 ACTION SUBMITTALS

A. General: Prepare and submit Action Submittals required by individual Specification Sections.

B. Product Data: Collect information into a single submittal for each element of construction and type of product or equipment.

1. If information must be specially prepared for submittal because standard printed data are not suitable for use, submit as Shop Drawings, not as Product Data.
2. Mark each copy of each submittal to show which products and options are applicable.
3. Include the following information, as applicable:

a. Manufacturer's written recommendations.
b. Manufacturer's product specifications.
c. Manufacturer's installation instructions.
d. Manufacturer's catalog cuts.
e. Wiring diagrams showing factory-installed wiring.
f. Printed performance curves.
g. Operational range diagrams.
h. Compliance with specified referenced standards.
i. Testing by recognized testing agency.

4. Number of Copies: Submit seven copies of Product Data, unless otherwise indicated. Architect will return five copies. Mark up and retain two returned copies as Project Record Documents.

C. Shop Drawings: Prepare Project-specific information, drawn accurately to scale. Do not base Shop Drawings on reproductions of the Contract Documents or standard printed data.

1. Preparation: Fully illustrate requirements in the Contract Documents. Include the following information, as applicable:

a. Dimensions.
b. Identification of products.
c. Fabrication and installation drawings.
d. Roughing-in and setting diagrams.
e. Wiring diagrams showing field-installed wiring, including power, signal, and control wiring.
f. Shopwork manufacturing instructions.
g. Templates and patterns.
h. Schedules.
i. Notation of coordination requirements.
j. Notation of dimensions established by field measurement.
k. Relationship to adjoining construction clearly indicated.
l. Seal and signature of professional engineer if specified.
m. Wiring Diagrams: Differentiate between manufacturer-installed and field-installed wiring.

2. Sheet Size: Except for templates, patterns, and similar full-size drawings, submit Shop Drawings on sheets at least 8-1/2 by 11 inches (215 by 280 mm) but no larger than 30 by 40 inches (750 by 1000 mm).
3. Number of Copies: Submit six opaque (bond) copies of each submittal. Architect will return one copy.

D. Samples: Submit Samples for review of kind, color, pattern, and texture for a check of these characteristics with other elements and for a comparison of these characteristics between submittal and actual component as delivered and installed.

1. Transmit Samples that contain multiple, related components such as accessories together in one submittal package.
2. Identification: Attach label on unexposed side of Samples that includes the following:

a. Generic description of Sample.
b. Product name and name of manufacturer.
c. Sample source.
d. Number and title of appropriate Specification Section.

3. Disposition: Maintain sets of approved Samples at Project site, available for quality-control comparisons throughout the course of construction activity. Sample sets may be used to determine final acceptance of construction associated with each set.
4. Samples for Initial Selection: Submit manufacturer's color charts consisting of units or sections of units showing the full range of colors, textures, and patterns available.

    a. Number of Samples: Submit one full set(s) of available choices where color, pattern, texture, or similar characteristics are required to be selected from manufacturer's product line. Architect will return submittal with options selected.

5. Samples for Verification: Submit full-size units or Samples of size indicated, prepared from same material to be used for the Work, cured and finished in manner specified, and physically identical with material or product proposed for use, and that show full range of color and texture variations expected. Samples include, but are not limited to, the following: partial sections of manufactured or fabricated components; small cuts or containers of materials; complete units of repetitively used materials; swatches showing color, texture, and pattern; color range sets; and components used for independent testing and inspection.

    a. Number of Samples: Submit three sets of Samples. Architect will retain two Sample sets; remainder will be returned. Mark up and retain one returned Sample set as a Project Record Sample.

E. Product Schedule or List: As required in individual Specification Sections, prepare a written summary indicating types of products required for the Work and their intended location.

    1. Number of Copies: Submit seven copies of product schedule or list, unless otherwise indicated. Architect will return five copies.

F. Submittals Schedule: Comply with requirements specified in Division 01 Section "Construction Progress Documentation."

G. Application for Payment: Comply with requirements specified in Division 01 Section "Payment Procedures."

H. Schedule of Values: Comply with requirements specified in Division 01 Section "Payment Procedures."

I. Subcontract List: Prepare a written summary identifying individuals or firms proposed for each portion of the Work, including those who are to furnish products or equipment fabricated to a special design.

1. Number of Copies: Submit three copies of subcontractor list, unless otherwise indicated. Architect will return two copies.

2.2 INFORMATIONAL SUBMITTALS

A. General: Prepare and submit Informational Submittals required by other Specification Sections.

1. Number of Copies: Submit two copies of each submittal, unless otherwise indicated. Architect will not return copies.
2. Certificates and Certifications: Provide a notarized statement that includes signature of entity responsible for preparing certification. Certificates and certifications shall be signed by an officer or other individual authorized to sign documents on behalf of that entity.
3. Test and Inspection Reports: Comply with requirements specified in Division 01 Section "Quality Requirements."

B. Coordination Drawings: Comply with requirements specified in Division 01 Section "Project Management and Coordination."

C. Contractor's Construction Schedule: Comply with requirements specified in Division 01 Section "Construction Progress Documentation."

D. Qualification Data: Prepare written information that demonstrates capabilities and experience of firm or person. Include lists of completed projects with project names and addresses, names and addresses of architects and owners, and other information specified.

E. Welding Certificates: Prepare written certification that welding procedures and personnel comply with requirements in the Contract Documents. Submit record of Welding Procedure Specification (WPS) and Procedure Qualification Record (PQR) on AWS forms. Include names of firms and personnel certified.

F. Installer Certificates: Prepare written statements on manufacturer's letterhead certifying that Installer complies with requirements in the Contract Documents and, where required, is authorized by manufacturer for this specific Project.

G. Manufacturer Certificates: Prepare written statements on manufacturer's letterhead certifying that manufacturer complies with requirements in the Contract Documents. Include evidence of manufacturing experience where required.

H. Product Certificates: Prepare written statements on manufacturer's letterhead certifying that product complies with requirements in the Contract Documents.

I. Material Certificates: Prepare written statements on manufacturer's letterhead certifying that material complies with requirements in the Contract Documents.

J. Material Test Reports: Prepare reports written by a qualified testing agency, on testing agency's standard form, indicating and interpreting test results of material for compliance with requirements in the Contract Documents.

K. Product Test Reports: Prepare written reports indicating current product produced by manufacturer complies with requirements in the Contract Documents. Base reports on evaluation of tests performed by manufacturer and witnessed by a qualified testing agency, or on comprehensive tests performed by a qualified testing agency.

L. Research/Evaluation Reports: Prepare written evidence, from a model code organization acceptable to authorities having jurisdiction, that product complies with building code in effect for Project.

M. Preconstruction Test Reports: Prepare reports written by a qualified testing agency, on testing agency's standard form, indicating and interpreting results of tests performed before installation of product, for compliance with performance requirements in the Contract Documents.

N. Compatibility Test Reports: Prepare reports written by a qualified testing agency, on testing agency's standard form, indicating and interpreting results of compatibility tests performed before installation of product. Include written recommendations for primers and substrate preparation needed for adhesion.

O. Field Test Reports: Prepare reports written by a qualified testing agency, on testing agency's standard form, indicating and interpreting results of field tests performed either during installation of product or after product is installed in its final location, for compliance with requirements in the Contract Documents.

P. Maintenance Data: Prepare written and graphic instructions and procedures for operation and normal maintenance of products and equipment. Comply with requirements specified in Division 01 Section "Operation and Maintenance Data."

Q. Design Data: Prepare written and graphic information, including, but not limited to, performance and design criteria, list of applicable codes and regulations, and calculations. Include list of assumptions and other performance and design criteria and a summary of loads. Include load diagrams if applicable. Provide name and version of software, if any, used for calculations. Include page numbers.

R. Manufacturer's Instructions: Prepare written or published information that documents manufacturer's recommendations, guidelines, and procedures for installing or operating a product or equipment. Include name of product and name, address, and telephone number of manufacturer.

S. Manufacturer's Field Reports: Prepare written information documenting factory-authorized service representative's tests and inspections. Include the following, as applicable:

1. Statement on condition of substrates and their acceptability for installation of product.
2. Summary of installation procedures being followed, whether they comply with requirements and, if not, what corrective action was taken.
3. Results of operational and other tests and a statement of whether observed performance complies with requirements.

T. Insurance Certificates and Bonds: Prepare written information indicating current status of insurance or bonding coverage. Include name of entity covered by insurance or bond, limits of coverage, amounts of deductibles, if any, and term of the coverage.

U. Material Safety Data Sheets (MSDSs): Submit information directly to Owner; do not submit to Architect.

1. Architect will not review submittals that include MSDSs and will return them for resubmittal.

2.3 DELEGATED DESIGN

A. Performance and Design Criteria: Where professional design services or certifications by a design professional are specifically required of Contractor by the Contract Documents, provide products and systems complying with specific performance and design criteria indicated.

1. If criteria indicated are not sufficient to perform services or certification required, submit a written request for additional information to Architect.

B. Delegated-Design Submittal: In addition to Shop Drawings, Product Data, and other required submittals, submit three copies of a statement, signed and sealed by the responsible design professional, for each product and system specifically assigned to Contractor to be designed or certified by a design professional.

1. Indicate that products and systems comply with performance and design criteria in the Contract Documents. Include list of codes, loads, and other factors used in performing these services.

PART 3 - EXECUTION

3.1 CONTRACTOR'S REVIEW

A. Review each submittal and check for coordination with other Work of the Contract and for compliance with the Contract Documents. Note corrections and field dimensions. Mark with approval stamp before submitting to Architect.

B. Approval Stamp: Stamp each submittal with a uniform, approval stamp. Include Project name and location, submittal number, Specification Section title and number, name of reviewer, date of Contractor's approval, and statement certifying that submittal has been reviewed, checked, and approved for compliance with the Contract Documents.

3.2 ARCHITECT'S ACTION

A. General: Architect will not review submittals that do not bear Contractor's approval stamp and will return them without action.

B. Action Submittals: Architect will review each submittal, make marks to indicate corrections or modifications required, and return it. Architect will stamp each submittal with an action stamp and will mark stamp appropriately to indicate action taken, as follows:

1. All submittals shall be submitted on the forms provided in the EJCDC. For forms not available in the EJCDC, submittals shall be on approved construction transmittal forms.

C. Informational Submittals: Architect will review each submittal and will not return it, or will return it if it does not comply with requirements. Architect will forward each submittal to appropriate party.

D. Partial submittals are not acceptable, will be considered nonresponsive, and will be returned without review. Submittals not required by the Contract Documents may not be reviewed and may be discarded.

JEFFERSON COUNTY ENGINEERING DEPARTMENT
JCSO HANGAR BUILDING

SECTION 014000 - QUALITY REQUIREMENTS

PART 1 - GENERAL

1.1 SUMMARY

A. This Section includes administrative and procedural requirements for quality assurance and quality control.

B. Testing and inspecting services are required to verify compliance with requirements specified or indicated. These services do not relieve Contractor of responsibility for compliance with the Contract Document requirements.

1. Specified tests, inspections, and related actions do not limit Contractor's other quality-assurance and -control procedures that facilitate compliance with the Contract Document requirements.
2. Requirements for Contractor to provide quality-assurance and -control services required by Architect, Owner, or authorities having jurisdiction are not limited by provisions of this Section.

C. See Divisions 02 through 49 Sections for specific test and inspection requirements.

1.2 DEFINITIONS

A. Architect: The term architect shall also refer to LJA Engineering.

B. Quality-Assurance Services: Activities, actions, and procedures performed before and during execution of the Work to guard against defects and deficiencies and substantiate that proposed construction will comply with requirements.

C. Quality-Control Services: Tests, inspections, procedures, and related actions during and after execution of the Work to evaluate that actual products incorporated into the Work and completed construction comply with requirements. Services do not include contract enforcement activities performed by Architect.

D. Mockups: Full-size, physical assemblies that are constructed on-site. Mockups are used to verify selections made under sample submittals, to demonstrate aesthetic effects and, where indicated, qualities of materials and execution, and to review construction, coordination, testing, or operation; they are not Samples. Approved mockups establish the standard by which the Work will be judged.

E. Laboratory Mockups: Full-size, physical assemblies that are constructed at testing facility to verify performance characteristics.

F. Preconstruction Testing: Tests and inspections that are performed specifically for the Project before products and materials are incorporated into the Work to verify performance or compliance with specified criteria.

G. Product Testing: Tests and inspections that are performed by an NRTL, an NVLAP, or a testing agency qualified to conduct product testing and acceptable to authorities having jurisdiction, to establish product performance and compliance with industry standards.

H. Source Quality-Control Testing: Tests and inspections that are performed at the source, i.e., plant, mill, factory, or shop.

I. Field Quality-Control Testing: Tests and inspections that are performed on-site for installation of the Work and for completed Work.

J. Testing Agency: An entity engaged to perform specific tests, inspections, or both. Testing laboratory shall mean the same as testing agency.

K. Installer/Applicator/Erector: Contractor or another entity engaged by Contractor as an employee, Subcontractor, or Sub-subcontractor, to perform a particular construction operation, including installation, erection, application, and similar operations.

1. Using a term such as "carpentry" does not imply that certain construction activities must be performed by accredited or unionized individuals of a corresponding generic name, such as "carpenter." It also does not imply that requirements specified apply exclusively to trades people of the corresponding generic name.

L. Experienced: When used with an entity, "experienced" means having successfully completed a minimum of five previous projects similar in size and scope to this Project; being familiar with special requirements indicated; and having complied with requirements of authorities having jurisdiction.

1.3 CONFLICTING REQUIREMENTS

A. General: If compliance with two or more standards is specified and the standards establish different or conflicting requirements for minimum quantities or quality levels, comply with the most stringent requirement. Refer uncertainties and requirements that are different, but apparently equal, to Architect for a decision before proceeding.

B. Minimum Quantity or Quality Levels: The quantity or quality level shown or specified shall be the minimum provided or performed. The actual installation may comply exactly with the minimum quantity or quality specified, or it may exceed the minimum within reasonable limits. To comply with these requirements, indicated numeric values are minimum or maximum, as appropriate, for the context of requirements. Refer uncertainties to Architect for a decision before proceeding.

1.4 SUBMITTALS

A. Qualification Data: For testing agencies specified in "Quality Assurance" Article to demonstrate their capabilities and experience. Include proof of qualifications in the form of a recent report on the inspection of the testing agency by a recognized authority.

B. Reports: Prepare and submit certified written reports that include the following:

1. Date of issue.
2. Project title and number.
3. Name, address, and telephone number of testing agency.
4. Dates and locations of samples and tests or inspections.
5. Names of individuals making tests and inspections.
6. Description of the Work and test and inspection method.
7. Identification of product and Specification Section.
8. Complete test or inspection data.
9. Test and inspection results and an interpretation of test results.
10. Record of temperature and weather conditions at time of sample taking and testing and inspecting.
11. Comments or professional opinion on whether tested or inspected Work complies with the Contract Document requirements.
12. Name and signature of laboratory inspector.
13. Recommendations on retesting and re-inspecting.

C. Permits, Licenses, and Certificates: For Owner's records, submit copies of permits, licenses, certifications, inspection reports, releases, jurisdictional settlements, notices, receipts for fee payments, judgments, correspondence, records, and similar documents, established for compliance with standards and regulations bearing on performance of the Work.

1.5 QUALITY ASSURANCE

A. General: Qualifications paragraphs in this Article establish the minimum qualification levels required; individual Specification Sections specify additional requirements.

B. Installer Qualifications: A firm or individual experienced in installing, erecting, or assembling work similar in material, design, and extent to that indicated for this Project, whose work has resulted in construction with a record of successful in-service performance.

C. Manufacturer Qualifications: A firm experienced in manufacturing products or systems similar to those indicated for this Project and with a record of successful in-service performance, as well as sufficient production capacity to produce required units.

D. Fabricator Qualifications: A firm experienced in producing products similar to those indicated for this Project and with a record of successful in-service performance, as well as sufficient production capacity to produce required units.

E. Professional Engineer Qualifications: A professional engineer who is legally qualified to practice in jurisdiction where Project is located and who is experienced in providing engineering services of the kind indicated. Engineering services are defined as those performed for installations of the system, assembly, or product that are similar to those indicated for this Project in material, design, and extent.

F. Specialists: Certain sections of the Specifications require that specific construction activities shall be performed by entities who are recognized experts in those

operations. Specialists shall satisfy qualification requirements indicated and shall be engaged for the activities indicated.

1. Requirement for specialists shall not supersede building codes and regulations governing the Work.

G. Testing Agency Qualifications: An NRTL, an NVLAP, or an independent agency with the experience and capability to conduct testing and inspecting indicated, as documented according to ASTM E 548; and with additional qualifications specified in individual Sections; and where required by authorities having jurisdiction, that is acceptable to authorities.

1. NRTL: A nationally recognized testing laboratory according to 29 CFR 1910.7.
2. NVLAP: A testing agency accredited according to NIST's National Voluntary Laboratory Accreditation Program.

H. Factory-Authorized Service Representative Qualifications: An authorized representative of manufacturer who is trained and approved by manufacturer to inspect installation of manufacturer's products that are similar in material, design, and extent to those indicated for this Project.

I. Mockups: Before installing portions of the Work requiring mockups, build mockups for each form of construction and finish required to comply with the following requirements, using materials indicated for the completed Work:

1. Build mockups in location and of size indicated or, if not indicated, as directed by Architect.
2. Notify Architect seven days in advance of dates and times when mockups will be constructed.
3. Demonstrate the proposed range of aesthetic effects and workmanship.
4. Obtain Architect's approval of mockups before starting work, fabrication, or construction.
5. Maintain mockups during construction in an undisturbed condition as a standard for judging the completed Work.
6. Demolish and remove mockups when directed, unless otherwise indicated.

J. Laboratory Mockups: Comply with requirements of preconstruction testing and those specified in individual Sections in Divisions 02 through 49.

1.6 QUALITY CONTROL

A. Contractor Responsibilities: Where quality-control services are indicated as Contractor's responsibility, Contractor will engage a qualified testing agency to perform these services.

1. Costs for retesting and re-inspecting construction that replaces or is necessitated by work that failed to comply with the Contract Documents will be paid by the contractor and contract sum will not be adjusted.

B. Tests and inspections not explicitly assigned to Contractor are Contractor's responsibility. Unless otherwise indicated, provide quality-control services specified and those required by authorities having jurisdiction. Perform quality-control services required of Contractor by authorities having jurisdiction, whether specified or not.

1. Where services are indicated as Contractor's responsibility, engage a qualified testing agency to perform these quality-control services.

    a. Contractor shall not employ same entity engaged by Owner, unless agreed to in writing by Owner.

2. Notify testing agencies at least 24 hours in advance of time when Work that requires testing or inspecting will be performed.
3. Where quality-control services are indicated as Contractor's responsibility, submit a certified written report, in duplicate, of each quality-control service.
4. Testing and inspecting requested by Contractor and not required by the Contract Documents are Contractor's responsibility.
5. Submit additional copies of each written report directly to authorities having jurisdiction, when they so direct.

C. Manufacturer's Field Services: Where indicated, engage a factory-authorized service representative to inspect field-assembled components and equipment installation, including service connections. Report results in writing as specified in Division 01 Section "Submittal Procedures."

D. Retesting/Re-inspecting: Regardless of whether original tests or inspections were Contractor's responsibility, provide quality-control services, including retesting and re-inspecting, for construction that replaced Work that failed to comply with the Contract Documents.

E. Testing Agency Responsibilities: Cooperate with Architect and Contractor in performance of duties. Provide qualified personnel to perform required tests and inspections.

1. Notify Architect and Contractor promptly of irregularities or deficiencies observed in the Work during performance of its services.
2. Determine the location from which test samples will be taken and in which situations tests are conducted.
3. Conduct and interpret tests and inspections and state in each report whether tested and inspected work complies with or deviates from requirements.
4. Submit a certified written report, in duplicate, of each test, inspection, and similar quality-control service through Contractor.
5. Do not release, revoke, alter, or increase the Contract Document requirements or approve or accept any portion of the Work.
6. Do not perform any duties of Contractor.

F. Associated Services: Cooperate with agencies performing required tests, inspections, and similar quality-control services, and provide reasonable auxiliary services as requested. Notify agency sufficiently in advance of operations to permit assignment of personnel. Provide the following:

1. Access to the Work.
2. Incidental labor and facilities necessary to facilitate tests and inspections.
3. Adequate quantities of representative samples of materials that require testing and inspecting. Assist agency in obtaining samples.
4. Facilities for storage and field curing of test samples.
5. Delivery of samples to testing agencies.
6. Preliminary design mix proposed for use for material mixes that require control by testing agency.
7. Security and protection for samples and for testing and inspecting equipment at Project site.

G. Coordination: Coordinate sequence of activities to accommodate required quality-assurance and -control services with a minimum of delay and to avoid necessity of removing and replacing construction to accommodate testing and inspecting.

1. Schedule times for tests, inspections, obtaining samples, and similar activities.

1.7 SPECIAL TESTS AND INSPECTIONS

A. Special Tests and Inspections: Contractor will engage a qualified testing agency to conduct special tests and inspections required by authorities having jurisdiction as the responsibility of Owner, and as follows:

B. Special Tests and Inspections: Conducted by a qualified testing agency required by authorities having jurisdiction, as indicated in individual Specification Sections, and as follows:

1. Verifying that manufacturer maintains detailed fabrication and quality-control procedures and reviewing the completeness and adequacy of those procedures to perform the Work.
2. Notifying Architect and Contractor promptly of irregularities and deficiencies observed in the Work during performance of its services.
3. Submitting a certified written report of each test, inspection, and similar quality-control service to Architect with copy to Contractor and to authorities having jurisdiction.
4. Submitting a final report of special tests and inspections at Substantial Completion, which includes a list of unresolved deficiencies.
5. Interpreting tests and inspections and stating in each report whether tested and inspected work complies with or deviates from the Contract Documents.
6. Retesting and re-inspecting corrected work.

PART 2 - PRODUCTS (Not Used)

PART 3 - EXECUTION

3.1 REPAIR AND PROTECTION

A. General: On completion of testing, inspecting, sample taking, and similar services, repair damaged construction and restore substrates and finishes.

1. Provide materials and comply with installation requirements specified in other Specification Sections. Restore patched areas and extend restoration into adjoining areas with durable seams that are as invisible as possible.
2. Comply with the Contract Document requirements for Division 01 Section "Cutting and Patching."

B. Protect construction exposed by or for quality-control service activities.

C. Repair and protection are Contractor's responsibility, regardless of the assignment of responsibility for quality-control services.

END OF SECTION 014000

JEFFERSON COUNTY ENGINEERING DEPARTMENT
JCSO HANGAR BUILDING

SECTION 014200 - REFERENCES

PART 1 - GENERAL

1.1 DEFINITIONS

A. General: Basic Contract definitions are included in the Conditions of the Contract.

B. "Approved": When used to convey Architect's action on Contractor's submittals, applications, and requests, "approved" is limited to Architect's duties and responsibilities as stated in the Conditions of the Contract.

C. "Directed": A command or instruction by Architect. Other terms including "requested," "authorized," "selected," "required," and "permitted" have the same meaning as "directed."

D. "Indicated": Requirements expressed by graphic representations or in written form on Drawings, in Specifications, and in other Contract Documents. Other terms including "shown," "noted," "scheduled," and "specified" have the same meaning as "indicated."

E. "Regulations": Laws, ordinances, statutes, and lawful orders issued by authorities having jurisdiction, and rules, conventions, and agreements within the construction industry that control performance of the Work.

F. "Furnish": Supply and deliver to Project site, ready for unloading, unpacking, assembly, installation, and similar operations.

G. "Install": Operations at Project site including unloading, temporarily storing, unpacking, assembling, erecting, placing, anchoring, applying, working to dimension, finishing, curing, protecting, cleaning, and similar operations.

H. "Provide": Furnish and install, complete and ready for the intended use.

I. "Project Site": Space available for performing construction activities. The extent of Project site is shown on Drawings and may or may not be identical with the description of the land on which Project is to be built.

1.2 INDUSTRY STANDARDS

A. Applicability of Standards: Unless the Contract Documents include more stringent requirements, applicable construction industry standards have the same force and effect as if bound or copied directly into the Contract Documents to the extent referenced. Such standards are made a part of the Contract Documents by reference.

B. Publication Dates: Comply with standards in effect as of date of the Contract Documents unless otherwise indicated.

C. Copies of Standards: Each entity engaged in construction on Project should be familiar with industry standards applicable to its construction activity. Copies of applicable standards are not bound with the Contract Documents.

1. Where copies of standards are needed to perform a required construction activity, obtain copies directly from publication source.

1.3 ABBREVIATIONS AND ACRONYMS

A. Industry Organizations: Where abbreviations and acronyms are used in Specifications or other Contract Documents, they shall mean the recognized name of the entities indicated in Thomson Gale's "Encyclopedia of Associations" or in Columbia Books' "National Trade & Professional Associations of the U.S."

B. Industry Organizations: Where abbreviations and acronyms are used in Specifications or other Contract Documents, they shall mean the recognized name of the entities in the following list.

AA	Aluminum Association, Inc. (The)
AAADM	American Association of Automatic Door Manufacturers
AABC	Associated Air Balance Council
AAMA	American Architectural Manufacturers Association
AASHTO	American Association of State Highway and Transportation Officials
AATCC	American Association of Textile Chemists and Colorists (The)
ABAA	Air Barrier Association of America
ABMA	American Bearing Manufacturers Association
ACI	ACI International (American Concrete Institute)
ACPA	American Concrete Pipe Association
AEIC	Association of Edison Illuminating Companies, Inc. (The)
AF&PA	American Forest & Paper Association
AGA	American Gas Association
AGC	Associated General Contractors of America (The)
AHA	American Hardboard Association (Now part of CPA)
AHAM	Association of Home Appliance Manufacturers

AI	Asphalt Institute
AIA	American Institute of Architects (The)
AISC	American Institute of Steel Construction
AISI	American Iron and Steel Institute
AITC	American Institute of Timber Construction
ALCA	Associated Landscape Contractors of America (Now PLANET - Professional Landcare Network)
ALSC	American Lumber Standard Committee, Incorporated
AMCA	Air Movement and Control Association International, Inc.
ANSI	American National Standards Institute
AOSA	Association of Official Seed Analysts, Inc.
APA	Architectural Precast Association
APA	APA - The Engineered Wood Association
APA EWS	APA - The Engineered Wood Association; Engineered Wood Systems
API	American Petroleum Institute
ARI	Air-Conditioning & Refrigeration Institute
ARMA	Asphalt Roofing Manufacturers Association
ASCE	American Society of Civil Engineers
ASCE/SEI	American Society of Civil Engineers/Structural Engineering Institute (See ASCE)
ASHRAE	American Society of Heating, Refrigerating and Air-Conditioning Engineers
ASME	ASME International (The American Society of Mechanical Engineers International)
ASSE	American Society of Sanitary Engineering
ASTM	ASTM International (American Society for Testing and Materials International)
AWCI	AWCI International (Association of the Wall and Ceiling Industry International)

AWCMA	American Window Covering Manufacturers Association (Now WCSC)
AWI	Architectural Woodwork Institute
AWPA	American Wood-Preservers' Association
AWS	American Welding Society
AWWA	American Water Works Association
BHMA	Builders Hardware Manufacturers Association
BIA	Brick Industry Association (The)
BICSI	BICSI
BIFMA	BIFMA International (Business and Institutional Furniture Manufacturer's Association International)
BISSC	Baking Industry Sanitation Standards Committee
CCC	Carpet Cushion Council
CDA	Copper Development Association
CEA	Canadian Electricity Association
CFFA	Chemical Fabrics & Film Association, Inc.
CGA	Compressed Gas Association
CIMA	Cellulose Insulation Manufacturers Association
CISCA	Ceilings & Interior Systems Construction Association
CISPI	Cast Iron Soil Pipe Institute
CLFMI	Chain Link Fence Manufacturers Institute
CRRC	Cool Roof Rating Council
CPA	Composite Panel Association
CPPA	Corrugated Polyethylene Pipe Association
CRI	Carpet & Rug Institute (The)
CRSI	Concrete Reinforcing Steel Institute

CSA	Canadian Standards Association
CSA	CSA International (Formerly: IAS - International Approval Services)
CSI	Cast Stone Institute
CSI	Construction Specifications Institute (The)
CSSB	Cedar Shake & Shingle Bureau
CTI	Cooling Technology Institute (Formerly: Cooling Tower Institute)
DHI	Door and Hardware Institute
EIA	Electronic Industries Alliance
EIMA	EIFS Industry Members Association
EJCDC	Engineers Joint Contract Documents Committee
EJMA	Expansion Joint Manufacturers Association, Inc.
ESD	ESD Association
FIBA	Federation Internationale de Basketball (The International Basketball Federation)
FIVB	Federation Internationale de Volleyball (The International Volleyball Federation)
FM Approvals	FM Approvals
FM Global	FM Global (Formerly: FMG - FM Global)
FMRC	Factory Mutual Research (Now FM Global)
FRSA	Florida Roofing, Sheet Metal & Air Conditioning Contractors Association, Inc.
FSA	Fluid Sealing Association
FSC	Forest Stewardship Council
GA	Gypsum Association
GANA	Glass Association of North America
GRI	(Now GSI)

GS	Green Seal
GSI	Geosynthetic Institute
HI	Hydraulic Institute
HI	Hydronics Institute
HMMA	Hollow Metal Manufacturers Association (Part of NAAMM)
HPVA	Hardwood Plywood & Veneer Association
HPW	H. P. White Laboratory, Inc.
IAS	International Approval Services (Now CSA International)
IBF	International Badminton Federation
ICEA	Insulated Cable Engineers Association, Inc.
ICRI	International Concrete Repair Institute, Inc.
IEC	International Electrotechnical Commission
IEEE	Institute of Electrical and Electronics Engineers, Inc. (The)
IESNA	Illuminating Engineering Society of North America
IEST	Institute of Environmental Sciences and Technology
IGCC	Insulating Glass Certification Council
IGMA	Insulating Glass Manufacturers Alliance
ILI	Indiana Limestone Institute of America, Inc.
ISO	International Organization for Standardization
ISSFA	International Solid Surface Fabricators Association
ITS	Intertek Testing Service NA
ITU	International Telecommunication Union
KCMA	Kitchen Cabinet Manufacturers Association
LMA	Laminating Materials Association (Now part of CPA)

LPI	Lightning Protection Institute
MBMA	Metal Building Manufacturers Association
MFMA	Maple Flooring Manufacturers Association, Inc.
MFMA	Metal Framing Manufacturers Association, Inc.
MH	Material Handling (Now MHIA)
MHIA	Material Handling Industry of America
MIA	Marble Institute of America
MPI	Master Painters Institute
MSS	Manufacturers Standardization Society of The Valve and Fittings Industry Inc.
NAAMM	National Association of Architectural Metal Manufacturers
NACE	NACE International (National Association of Corrosion Engineers International)
NADCA	National Air Duct Cleaners Association
NAGWS	National Association for Girls and Women in Sport
NAIMA	North American Insulation Manufacturers Association
NBGQA	National Building Granite Quarries Association, Inc.
NCAA	National Collegiate Athletic Association (The)
NCMA	National Concrete Masonry Association
NCPI	National Clay Pipe Institute
NCTA	National Cable & Telecommunications Association
NEBB	National Environmental Balancing Bureau
NECA	National Electrical Contractors Association
NeLMA	Northeastern Lumber Manufacturers' Association
NEMA	National Electrical Manufacturers Association
NETA	InterNational Electrical Testing Association

NFHS	National Federation of State High School Associations
NFPA	NFPA (National Fire Protection Association)
NFRC	National Fenestration Rating Council
NGA	National Glass Association
NHLA	National Hardwood Lumber Association
NLGA	National Lumber Grades Authority
NOFMA	NOFMA: The Wood Flooring Manufacturers Association (Formerly: National Oak Flooring Manufacturers Association)
NRCA	National Roofing Contractors Association
NRMCA	National Ready Mixed Concrete Association
NSF	NSF International (National Sanitation Foundation International)
NSSGA	National Stone, Sand & Gravel Association
NTMA	National Terrazzo & Mosaic Association, Inc. (The)
NTRMA	National Tile Roofing Manufacturers Association (Now TRI)
NWWDA	National Wood Window and Door Association (Now WDMA)
OPL	Omega Point Laboratories, Inc. (Now ITS)
PCI	Precast/Prestressed Concrete Institute
PDCA	Painting & Decorating Contractors of America
PDI	Plumbing & Drainage Institute
PGI	PVC Geomembrane Institute
PLANET	Professional Landcare Network (Formerly: ACLA - Associated Landscape Contractors of America)
PTI	Post-Tensioning Institute
RCSC	Research Council on Structural Connections

RFCI	Resilient Floor Covering Institute
RIS	Redwood Inspection Service
SAE	SAE International
SDI	Steel Deck Institute
SDI	Steel Door Institute
SEFA	Scientific Equipment and Furniture Association
SEI/ASCE	Structural Engineering Institute/American Society of Civil Engineers (See ASCE)
SGCC	Safety Glazing Certification Council
SIA	Security Industry Association
SIGMA	Sealed Insulating Glass Manufacturers Association (Now IGMA)
SJI	Steel Joist Institute
SMA	Screen Manufacturers Association
SMACNA	Sheet Metal and Air Conditioning Contractors' National Association
SMPTE	Society of Motion Picture and Television Engineers
SPFA	Spray Polyurethane Foam Alliance (Formerly: SPI/SPFD - The Society of the Plastics Industry, Inc.; Spray Polyurethane Foam Division)
SPIB	Southern Pine Inspection Bureau (The)
SPRI	Single Ply Roofing Industry
SSINA	Specialty Steel Industry of North America
SSPC	SSPC: The Society for Protective Coatings
STI	Steel Tank Institute
SWI	Steel Window Institute
SWRI	Sealant, Waterproofing, & Restoration Institute
TCA	Tile Council of America, Inc.

TIA/EIA	Telecommunications Industry Association/Electronic Industries Alliance
TMS	The Masonry Society
TPI	Truss Plate Institute, Inc.
TPI	Turfgrass Producers International
TRI	Tile Roofing Institute
UL	Underwriters Laboratories Inc.
UNI	Uni-Bell PVC Pipe Association
USAV	USA Volleyball
USGBC	U.S. Green Building Council
USITT	United States Institute for Theatre Technology, Inc.
WASTEC	Waste Equipment Technology Association
WCLIB	West Coast Lumber Inspection Bureau
WCMA	Window Covering Manufacturers Association (Now WCSC)
WCSC	Window Covering Safety Council (Formerly: WCMA - Window Covering Manufacturers Association)
WDMA	Window & Door Manufacturers Association (Formerly: NWWDA - National Wood Window and Door Association)
WI	Woodwork Institute (Formerly: WIC - Woodwork Institute of California)
WIC	Woodwork Institute of California (Now WI)
WMMPA	Wood Moulding & Millwork Producers Association
WSRCA	Western States Roofing Contractors Association
WWPA	Western Wood Products Association

C. Code Agencies: Where abbreviations and acronyms are used in Specifications or other Contract Documents, they shall mean the recognized name of the entities in the following list.

BOCA	BOCA International, Inc. (See ICC)

IAPMO	International Association of Plumbing and Mechanical Officials
ICBO	International Conference of Building Officials (See ICC)
ICBOES	ICBO Evaluation Service, Inc. (See ICC-ES)
ICC	International Code Council
ICC-ES	ICC Evaluation Service, Inc.
SBCCI	Southern Building Code Congress International, Inc. (See ICC)
UBC	Uniform Building Code (See ICC)

D. Federal Government Agencies: Where abbreviations and acronyms are used in Specifications or other Contract Documents, they shall mean the recognized name of the entities in the following list.

CE	Army Corps of Engineers
CPSC	Consumer Product Safety Commission
DOC	Department of Commerce
DOD	Department of Defense
DOE	Department of Energy
EPA	Environmental Protection Agency
FAA	Federal Aviation Administration
FCC	Federal Communications Commission
FDA	Food and Drug Administration
GSA	General Services Administration
HUD	Department of Housing and Urban Development
LBL	Lawrence Berkeley National Laboratory
NCHRP	National Cooperative Highway Research Program (See TRB)
NIST	National Institute of Standards and Technology

OSHA	Occupational Safety & Health Administration
PBS	Public Building Service (See GSA)
PHS	Office of Public Health and Science
RUS	Rural Utilities Service (See USDA)
SD	State Department
TRB	Transportation Research Board
USDA	Department of Agriculture
USPS	Postal Service

E. Standards and Regulations: Where abbreviations and acronyms are used in Specifications or other Contract Documents, they shall mean the recognized name of the standards and regulations in the following list.

ADAAG	Americans with Disabilities Act (ADA) Architectural Barriers Act (ABA)
CFR	Code of Federal Regulations
DOD	Department of Defense Military Specifications and Standards
DSCC	Defense Supply Center Columbus (See FS)
FED-STD	Federal Standard (See FS)
FS	Federal Specification
FTMS	Federal Test Method Standard (See FS)
MIL	(See MILSPEC)
MIL-STD	(See MILSPEC)
MILSPEC	Military Specification and Standards
UFAS	Uniform Federal Accessibility Standards

F. State Government Agencies: Where abbreviations and acronyms are used in Specifications or other Contract Documents, they shall mean the recognized name of the entities in the following list.

CBHF State of California, Department of Consumer Affairs Bureau of Home Furnishings and Thermal Insulation

CCR California Code of Regulations

CPUC California Public Utilities Commission

TFS Texas Forest Service
Forest Resource Development

PART 2 - PRODUCTS (Not Used)

PART 3 - EXECUTION (Not Used)

END OF SECTION 014200

JEFFERSON COUNTY ENGINEERING DEPARTMENT
JCSO HANGAR BUILDING

SECTION 015000 - TEMPORARY FACILITIES AND CONTROLS

PART 1 - GENERAL

1.1 SUMMARY

A. This Section includes requirements for temporary utilities, support facilities, and security and protection facilities.

B. See Division 01 Section "Execution" for progress cleaning requirements.

C. See Divisions 02 through 49 Sections for temporary heat, ventilation, and humidity requirements for products in those Sections.

1.2 DEFINITIONS

A. Permanent Enclosure: As determined by Architect, permanent or temporary roofing is complete, insulated, and weather tight; exterior walls are insulated and weather tight; and all openings are closed with permanent construction or substantial temporary closures.

1.3 USE CHARGES

A. General: Cost or use charges for temporary facilities shall be included in the Contract Sum. Allow other entities to use temporary services and facilities without cost, including, but not limited to, Architect, occupants of Project, testing agencies, and authorities having jurisdiction.

B. Water Service: Water from Owner's existing water system is available for use without metering and without payment of use charges. Provide connections and extensions of services as required for construction operations.

C. Electric Power Service: Electric power from Owner's existing system is available for use without metering and without payment of use charges. Provide connections and extensions of services as required for construction operations.

1.4 SUBMITTALS

A. Site Plan: Show temporary facilities, utility hookups, staging areas, and parking areas for construction personnel.

1.5 QUALITY ASSURANCE

A. Electric Service: Comply with NECA, NEMA, and UL standards and regulations for temporary electric service. Install service to comply with NFPA 70.

B. Tests and Inspections: Arrange for authorities having jurisdiction to test and inspect each temporary utility before use. Obtain required certifications and permits.

1.6 PROJECT CONDITIONS

A. Temporary Use of Permanent Facilities: Installer of each permanent service shall assume responsibility for operation, maintenance, and protection of each permanent service during its use as a construction facility before Owner's acceptance, regardless of previously assigned responsibilities.

PART 2 - PRODUCTS

2.1 MATERIALS

A. Pavement: Comply with Division 32 Section "Asphalt Paving."

B. Chain-Link Fencing: Minimum 2-inch (50-mm), 0.148-inch- (3.76-mm-) thick, galvanized steel, chain-link fabric fencing; minimum 6 feet (1.8 m) high with galvanized steel pipe posts; minimum 2-3/8-inch- (60-mm-) OD line posts and 2-7/8-inch- (73-mm-) OD corner and pull posts, with 1-5/8-inch- (42-mm-) OD top rails.

C. Portable Chain-Link Fencing: Minimum 2-inch (50-mm), 9-gage, galvanized steel, chain-link fabric fencing; minimum 6 feet (1.8 m) high with galvanized steel pipe posts; minimum 2-3/8-inch- (60-mm-) OD line posts and 2-7/8-inch- (73-mm-) OD corner and pull posts, with 1-5/8-inch- (42-mm-) OD top and bottom rails. Provide galvanized steel bases for supporting posts.

D. Lumber and Plywood: Comply with requirements in Division 06 Section "Rough Carpentry."

E. Gypsum Board: Minimum 1/2 inch (12.7 mm) thick by 48 inches (1219 mm) wide by maximum available lengths; regular-type panels with tapered edges. Comply with ASTM C 36/C 36M.

F. Insulation: Unfaced mineral-fiber blanket, manufactured from glass, slag wool, or rock wool; with maximum flame-spread and smoke-developed indexes of 25 and 50, respectively.

2.2 TEMPORARY FACILITIES

A. Field Offices, General: Prefabricated or mobile units with serviceable finishes, temperature controls, and foundations adequate for normal loading.

B. Storage and Fabrication Sheds: Provide sheds sized, furnished, and equipped to accommodate materials and equipment for construction operations.

2.3 EQUIPMENT

A. Fire Extinguishers: Portable, UL rated; with class and extinguishing agent as required by locations and classes of fire exposures.

B. HVAC Equipment: Unless Owner authorizes use of permanent HVAC system, provide vented, self-contained, liquid-propane-gas or fuel-oil heaters with individual space thermostatic control.

1. Use of gasoline-burning space heaters, open-flame heaters, or salamander-type heating units is prohibited.
2. Heating Units: Listed and labeled for type of fuel being consumed, by a testing agency acceptable to authorities having jurisdiction, and marked for intended use.
3. Permanent HVAC System: If Owner authorizes use of permanent HVAC system for temporary use during construction, provide filter with MERV of 8 at each return air grille in system and remove at end of construction.

PART 3 - EXECUTION

3.1 INSTALLATION, GENERAL

A. Locate facilities where they will serve Project adequately and result in minimum interference with performance of the Work. Relocate and modify facilities as required by progress of the Work.

1. Locate facilities to limit site disturbance as specified in Division 01 Section "Summary."

B. Provide each facility ready for use when needed to avoid delay. Do not remove until facilities are no longer needed or are replaced by authorized use of completed permanent facilities.

3.2 TEMPORARY UTILITY INSTALLATION

A. General: Install temporary service or connect to existing service.

1. Arrange with utility company, Owner, and existing users for time when service can be interrupted, if necessary, to make connections for temporary services.

B. Sewers and Drainage: Provide temporary utilities to remove effluent lawfully.

1. Connect temporary sewers to municipal system as directed by authorities having jurisdiction.

C. Water Service: Install water service and distribution piping in sizes and pressures adequate for construction.

D. Water Service: Use of Owner's existing water service facilities will be permitted, as long as facilities are cleaned and maintained in a condition acceptable to Owner. At Substantial Completion, restore these facilities to condition existing before initial use.

1. Where installations below an outlet might be damaged by spillage or leakage, provide a drip pan of suitable size to minimize water damage. Drain accumulated water promptly from pans.

E. Sanitary Facilities: Provide temporary toilets, wash facilities, and drinking water for use of construction personnel. Comply with authorities having jurisdiction for type, number, location, operation, and maintenance of fixtures and facilities.

1. Toilets: Use of Owner's existing toilet facilities will not be permitted.

F. Heating and Cooling : Provide temporary heating and cooling required by construction activities for curing or drying of completed installations or for protecting installed construction from adverse effects of low temperatures or high humidity. Select equipment that will not have a harmful effect on completed installations or elements being installed.

G. Ventilation and Humidity Control: Provide temporary ventilation required by construction activities for curing or drying of completed installations or for protecting installed construction from adverse effects of high humidity. Select equipment that will not have a harmful effect on completed installations or elements being installed. Coordinate ventilation requirements to produce ambient condition required and minimize energy consumption.

H. Electric Power Service: Use of Owner's existing electric power service will be permitted, as long as equipment is maintained in a condition acceptable to Owner.

I. Electric Power Service: Provide electric power service and distribution system of sufficient size, capacity, and power characteristics required for construction operations.

1. Install electric power service overhead, unless otherwise indicated.
2. Connect temporary service to Owner's existing power source, as directed by Owner.

J. Lighting: Provide temporary lighting with local switching that provides adequate illumination for construction operations, observations, inspections, and traffic conditions.

1. Install and operate temporary lighting that fulfills security and protection requirements without operating entire system.

K. Telephone Service: Provide temporary telephone service in common-use facilities for use by all construction personnel. Install one telephone line(s) for each field office.

1. Provide additional telephone lines for the following:

a. Provide a dedicated telephone line for each facsimile machine and computer in each field office.

2. At each telephone, post a list of important telephone numbers including police and fire departments, Contractor's home office, Architect's office, Owner's office and security office, Principal subcontractors' field and home offices.
3. Provide superintendent with cellular telephone or portable two-way radio for use when away from field office.

L. Electronic Communication Service: Provide temporary electronic communication service, including electronic mail in field office.

3.3 SUPPORT FACILITIES INSTALLATION

A. General: Comply with the following:

1. Provide incombustible construction for offices, shops, and sheds located within construction area or within 30 feet (9 m) of building lines. Comply with NFPA 241.
2. Maintain support facilities until near Substantial Completion. Remove before Substantial Completion. Personnel remaining after Substantial Completion will be permitted to use permanent facilities, under conditions acceptable to Owner.

B. Temporary Roads and Paved Areas: Construct and maintain temporary roads and paved areas adequate for construction operations. Locate temporary roads and paved areas within construction limits indicated on Drawings.

1. Provide dust-control treatment that is nonpolluting and nontracking. Reapply treatment as required to minimize dust.

C. Temporary Roads and Paved Areas: Construct and maintain temporary roads and paved areas adequate for construction operations. Locate temporary roads and paved areas in same location as permanent roads and paved areas. Extend temporary roads and paved areas, within construction limits indicated, as necessary for construction operations.

1. Coordinate elevations of temporary roads and paved areas with permanent roads and paved areas.
2. Prepare sub grade and install sub base and base for temporary roads and paved areas according to Division 31 Section "Earth Moving."
3. Recondition base after temporary use, including removing contaminated material, re-grading, proof rolling, compacting, and testing.
4. Delay installation of final course of permanent hot-mix asphalt pavement until immediately before Substantial Completion. Repair hot-mix asphalt base-course pavement before installation of final course according to Division 32 Section "Asphalt Paving."

D. Traffic Controls: Comply with requirements of authorities having jurisdiction.

1. Protect existing site improvements to remain including curbs, pavement, and utilities.
2. Maintain access for fire-fighting equipment and access to fire hydrants.

E. Parking: Use designated areas of Owner's existing parking areas for construction personnel.

F. Dewatering Facilities and Drains: Comply with requirements of authorities having jurisdiction. Maintain Project site, excavations, and construction free of water.

1. Dispose of rainwater in a lawful manner that will not result in flooding Project or adjoining properties nor endanger permanent Work or temporary facilities.
2. Remove snow and ice as required to minimize accumulations.

G. Project Identification and Temporary Signs: Provide Project identification and other signs as indicated at the end of this section. Install signs where indicated to inform public and individuals seeking entrance to Project. Unauthorized signs are not permitted.

1. Provide temporary, directional signs for construction personnel and visitors.
2. Maintain and touchup signs so they are legible at all times.

H. Waste Disposal Facilities: Provide waste-collection containers in sizes adequate to handle waste from construction operations. Comply with requirements of authorities having jurisdiction. Comply with Division 01 Section "Execution" for progress cleaning requirements.

I. Lifts and Hoists: Provide facilities necessary for hoisting materials and personnel.

1. Truck cranes and similar devices used for hoisting materials are considered "tools and equipment" and not temporary facilities.

J. Temporary Elevator Use: Refer to Division 14 Sections for temporary use of new elevators.

K. Temporary Stairs: Until permanent stairs are available, provide temporary stairs where ladders are not adequate.

L. Temporary Use of Permanent Stairs: Cover finished, permanent stairs with protective covering of plywood or similar material so finishes will be undamaged at time of acceptance.

3.4 SECURITY AND PROTECTION FACILITIES INSTALLATION

A. Environmental Protection: Provide protection, operate temporary facilities, and conduct construction in ways and by methods that comply with environmental regulations and that minimize possible air, waterway, and subsoil contamination or pollution or other undesirable effects.

B. Temporary Erosion and Sedimentation Control: Provide measures to prevent soil erosion and discharge of soil-bearing water runoff and airborne dust to adjacent properties and walkways, according to requirements of authorities having jurisdiction.

C. Storm Water Control: Comply with authorities having jurisdiction. Provide barriers in and around excavations and sub grade construction to prevent flooding by runoff of storm water from heavy rains.

D. Tree and Plant Protection: Install temporary fencing located as indicated or outside the drip line of trees to protect vegetation from damage from construction operations. Protect tree root systems from damage, flooding, and erosion.

E. Pest Control: Engage pest-control service to recommend practices to minimize attraction and harboring of rodents, roaches, and other pests and to perform extermination and control procedures at regular intervals so Project will be free of pests and their residues at Substantial Completion. Obtain extended warranty for Owner. Perform control operations lawfully, using environmentally safe materials.

F. Site Enclosure Fence: Before construction operations begin and install site enclosure fence in a manner that will prevent people and animals from easily entering site except by entrance gates.

1. Extent of Fence: As required to enclose entire Project site or portion determined sufficient to accommodate construction operations.
2. Maintain security by limiting number of keys and restricting distribution to authorized personnel. Provide Owner with one set of keys.

G. Security Enclosure and Lockup: Install substantial temporary enclosure around partially completed areas of construction. Provide lockable entrances to prevent unauthorized entrance, vandalism, theft, and similar violations of security.

H. Barricades, Warning Signs, and Lights: Comply with requirements of authorities having jurisdiction for erecting structurally adequate barricades, including warning signs and lighting.

I. Temporary Enclosures: Provide temporary enclosures for protection of construction, in progress and completed, from exposure, foul weather, other construction operations, and similar activities. Provide temporary weather tight enclosure for building exterior.

1. Where heating or cooling is needed and permanent enclosure is not complete, insulate temporary enclosures.

J. Temporary Fire Protection: Install and maintain temporary fire-protection facilities of types needed to protect against reasonably predictable and controllable fire losses. Comply with NFPA 241.

1. Prohibit smoking in construction areas.
2. Supervise welding operations, combustion-type temporary heating units, and similar sources of fire ignition according to requirements of authorities having jurisdiction.

3. Develop and supervise an overall fire-prevention and -protection program for personnel at Project site. Review needs with local fire department and establish procedures to be followed. Instruct personnel in methods and procedures. Post warnings and information.
4. Provide temporary standpipes and hoses for fire protection. Hang hoses with a warning sign stating that hoses are for fire-protection purposes only and are not to be removed. Match hose size with outlet size and equip with suitable nozzles.

3.5 OPERATION, TERMINATION, AND REMOVAL

A. Supervision: Enforce strict discipline in use of temporary facilities. To minimize waste and abuse, limit availability of temporary facilities to essential and intended uses.

B. Maintenance: Maintain facilities in good operating condition until removal.

1. Maintain operation of temporary enclosures, heating, cooling, humidity control, ventilation, and similar facilities on a 24-hour basis where required to achieve indicated results and to avoid possibility of damage.

C. Temporary Facility Changeover: Do not change over from using temporary security and protection facilities to permanent facilities until Substantial Completion.

D. Termination and Removal: Remove each temporary facility when need for its service has ended, when it has been replaced by authorized use of a permanent facility, or no later than Substantial Completion. Complete or, if necessary, restore permanent construction that may have been delayed because of interference with temporary facility. Repair damaged Work, clean exposed surfaces, and replace construction that cannot be satisfactorily repaired.

1. Materials and facilities that constitute temporary facilities are property of Contractor. Owner reserves right to take possession of Project identification signs.
2. At Substantial Completion, clean and renovate permanent facilities used during construction period. Comply with final cleaning requirements specified in Division 01 Section "Closeout Procedures."

END OF SECTION 015000

JEFFERSON COUNTY ENGINEERING DEPARTMENT
JCSO HANGAR BUILDING

SECTION 016000 - PRODUCT REQUIREMENTS

PART 1 - GENERAL

1.1 SUMMARY

A. This Section includes administrative and procedural requirements for selection of products for use in Project; product delivery, storage, and handling; manufacturers' standard warranties on products; special warranties; product substitutions; and comparable products.

B. See Division 01 Section "Closeout Procedures" for submitting warranties for Contract closeout.

C. See Divisions 02 through 49 Sections for specific requirements for warranties on products and installations specified to be warranted.

1.2 DEFINITIONS

A. Products: Items purchased for incorporating into the Work, whether purchased for Project or taken from previously purchased stock. The term "product" includes the terms "material," "equipment," "system," and terms of similar intent.

1. Named Products: Items identified by manufacturer's product name, including make or model number or other designation shown or listed in manufacturer's published product literature, that is current as of date of the Contract Documents.
2. New Products: Items that have not previously been incorporated into another project or facility. Products salvaged or recycled from other projects are not considered new products.
3. Comparable Product: Product that is demonstrated and approved through submittal process, or where indicated as a product substitution, to have the indicated qualities related to type, function, dimension, in-service performance, physical properties, appearance, and other characteristics that equal or exceed those of specified product.

B. Substitutions: Changes in products, materials, equipment, and methods of construction from those required by the Contract Documents and proposed by Contractor.

C. Basis-of-Design Product Specification: Where a specific manufacturer's product is named and accompanied by the words "basis of design," including make or model number or other designation, to establish the significant qualities related to type, function, dimension, in-service performance, physical properties, appearance, and other characteristics for purposes of evaluating comparable products of other named manufacturers.

1.3 SUBMITTALS

A. Substitution Requests: Submit three copies of each request for consideration. Identify product or fabrication or installation method to be replaced. Include Specification Section number and title and Drawing numbers and titles.

1. Substitution Request Form: type written letter on company stationary.
2. Documentation: Show compliance with requirements for substitutions and the following, as applicable:

a. Statement indicating why specified material or product cannot be provided.
b. Coordination information, including a list of changes or modifications needed to other parts of the Work and to construction performed by Owner and separate contractors, that will be necessary to accommodate proposed substitution.
c. Detailed comparison of significant qualities of proposed substitution with those of the Work specified. Significant qualities may include attributes such as performance, weight, size, durability, visual effect, and specific features and requirements indicated.
d. Product Data, including drawings and descriptions of products and fabrication and installation procedures.
e. Samples, where applicable or requested.
f. List of similar installations for completed projects with project names and addresses and names and addresses of architects and owners.
g. Material test reports from a qualified testing agency indicating and interpreting test results for compliance with requirements indicated.
h. Research/evaluation reports evidencing compliance with building code in effect for Project, from a model code organization acceptable to authorities having jurisdiction.
i. Detailed comparison of Contractor's Construction Schedule using proposed substitution with products specified for the Work, including effect on the overall Contract Time. If specified product or method of construction cannot be provided within the Contract Time, include letter from manufacturer, on manufacturer's letterhead, stating lack of availability or delays in delivery.
j. Cost information, including a proposal of change, if any, in the Contract Sum.
k. Contractor's certification that proposed substitution complies with requirements in the Contract Documents and is appropriate for applications indicated.
l. Contractor's waiver of rights to additional payment or time that may subsequently become necessary because of failure of proposed substitution to produce indicated results.

3. Architect's Action: If necessary, Architect will request additional information or documentation for evaluation within 7 days of receipt of a request for substitution. Architect will notify Contractor of acceptance or rejection of proposed substitution within 15 days of receipt of request, or 7 days of receipt of additional information or documentation, whichever is later.

a. Form of Acceptance: Change Order.

b. Use product specified if Architect cannot make a decision on use of a proposed substitution within time allocated.

B. Comparable Product Requests: Submit three copies of each request for consideration. Identify product or fabrication or installation method to be replaced. Include Specification Section number and title and Drawing numbers and titles.

1. Architect's Action: If necessary, Architect will request additional information or documentation for evaluation within one week of receipt of a comparable product request. Architect will notify Contractor of approval or rejection of proposed comparable product request within 15 days of receipt of request, or 7 days of receipt of additional information or documentation, whichever is later.

a. Form of Approval: As specified in Division 01 Section "Submittal Procedures."
b. Use product specified if Architect cannot make a decision on use of a comparable product request within time allocated.

C. Basis-of-Design Product Specification Submittal: Comply with requirements in Division 01 Section "Submittal Procedures." Show compliance with requirements.

1.4 QUALITY ASSURANCE

A. Compatibility of Options: If Contractor is given option of selecting between two or more products for use on Project, product selected shall be compatible with products previously selected, even if previously selected products were also options.

1.5 PRODUCT DELIVERY, STORAGE, AND HANDLING

A. Deliver, store, and handle products using means and methods that will prevent damage, deterioration, and loss, including theft. Comply with manufacturer's written instructions.

B. Delivery and Handling:

1. Schedule delivery to minimize long-term storage at Project site and to prevent overcrowding of construction spaces.
2. Coordinate delivery with installation time to ensure minimum holding time for items that are flammable, hazardous, easily damaged, or sensitive to deterioration, theft, and other losses.
3. Deliver products to Project site in an undamaged condition in manufacturer's original sealed container or other packaging system, complete with labels and instructions for handling, storing, unpacking, protecting, and installing.
4. Inspect products on delivery to ensure compliance with the Contract Documents and to ensure that products are undamaged and properly protected.

C. Storage:

1. Store products to allow for inspection and measurement of quantity or counting of units.
2. Store materials in a manner that will not endanger Project structure.
3. Store products that are subject to damage by the elements, under cover in a weather tight enclosure above ground, with ventilation adequate to prevent condensation.
4. Store cementitious products and materials on elevated platforms.
5. Store foam plastic from exposure to sunlight, except to extent necessary for period of installation and concealment.
6. Comply with product manufacturer's written instructions for temperature, humidity, ventilation, and weather-protection requirements for storage.
7. Protect stored products from damage and liquids from freezing.

1.6 PRODUCT WARRANTIES

A. Warranties specified in other Sections shall be in addition to, and run concurrent with, other warranties required by the Contract Documents. Manufacturer's disclaimers and limitations on product warranties do not relieve Contractor of obligations under requirements of the Contract Documents.

1. Manufacturer's Warranty: Preprinted written warranty published by individual manufacturer for a particular product and specifically endorsed by manufacturer to Owner.
2. Special Warranty: Written warranty required by or incorporated into the Contract Documents, either to extend time limit provided by manufacturer's warranty or to provide more rights for Owner.

B. Special Warranties: Prepare a written document that contains appropriate terms and identification, ready for execution. Submit a draft for approval before final execution.

1. Manufacturer's Standard Form: Modified to include Project-specific information and properly executed.
2. Specified Form: When specified forms are included with the Specifications, prepare a written document using appropriate form properly executed.
3. Refer to Divisions 2 through 16 Sections for specific content requirements and particular requirements for submitting special warranties.

C. Submittal Time: Comply with requirements in Division 01 Section "Closeout Procedures."

PART 2 - PRODUCTS

2.1 PRODUCT SELECTION PROCEDURES

A. General Product Requirements: Provide products that comply with the Contract Documents, that are undamaged and, unless otherwise indicated, that are new at time of installation.

1. Provide products complete with accessories, trim, finish, fasteners, and other items needed for a complete installation and indicated use and effect.
2. Standard Products: If available, and unless custom products or nonstandard options are specified, provide standard products of types that have been produced and used successfully in similar situations on other projects.
3. Owner reserves the right to limit selection to products with warranties not in conflict with requirements of the Contract Documents.
4. Where products are accompanied by the term "as selected," Architect will make selection.
5. Where products are accompanied by the term "match sample," sample to be matched is Architect's.
6. Descriptive, performance, and reference standard requirements in the Specifications establish "salient characteristics" of products.

B. Product Selection Procedures:

1. Product: Where Specifications name a single product and manufacturer, provide the named product that complies with requirements.
2. Manufacturer/Source: Where Specifications name a single manufacturer or source, provide a product by the named manufacturer or source that complies with requirements.
3. Products: Where Specifications include a list of names of both products and manufacturers, provide one of the products listed that complies with requirements.
4. Manufacturers: Where Specifications include a list of manufacturers' names, provide a product by one of the manufacturers listed that complies with requirements.
5. Available Products: Where Specifications include a list of names of both products and manufacturers, provide one of the products listed, or an unnamed product, that complies with requirements. Comply with provisions in Part 2 "Comparable Products" Article for consideration of an unnamed product.
6. Available Manufacturers: Where Specifications include a list of manufacturers, provide a product by one of the manufacturers listed, or an unnamed manufacturer, that complies with requirements. Comply with provisions in Part 2 "Comparable Products" Article for consideration of an unnamed product.
7. Product Options: Where Specifications indicate that sizes, profiles, and dimensional requirements on Drawings are based on a specific product or system, provide the specified product or system. Comply with provisions in Part 2 "Product Substitutions" Article for consideration of an unnamed product or system.
8. Basis-of-Design Product: Where Specifications name a product and include a list of manufacturers, provide the specified product or a comparable product by one of the other named manufacturers. Drawings and Specifications indicate sizes, profiles, dimensions, and other characteristics that are based on the product named. Comply with provisions in Part 2 "Comparable Products" Article for consideration of an unnamed product by the other named manufacturers.
9. Visual Matching Specification: Where Specifications require matching an established Sample, select a product that complies with requirements and matches Architect's sample. Architect's decision will be final on whether a proposed product matches.

a. If no product available within specified category matches and complies with other specified requirements, comply with provisions in Part 2 "Product Substitutions" Article for proposal of product.

10. Visual Selection Specification: Where Specifications include the phrase "as selected from manufacturer's colors, patterns, textures" or a similar phrase, select a product that complies with other specified requirements.

    a. Standard Range: Where Specifications include the phrase "standard range of colors, patterns, textures" or similar phrase, Architect will select color, pattern, density, or texture from manufacturer's product line that does not include premium items.
    b. Full Range: Where Specifications include the phrase "full range of colors, patterns, textures" or similar phrase, Architect will select color, pattern, density, or texture from manufacturer's product line that includes both standard and premium items.

2.2 PRODUCT SUBSTITUTIONS

A. Timing: Architect will consider requests for substitution if received within 60 days after the Notice to Proceed. Requests received after that time may be considered or rejected at discretion of Architect.

B. Conditions: Architect will consider Contractor's request for substitution when the following conditions are satisfied. If the following conditions are not satisfied, Architect will return requests without action, except to record noncompliance with these requirements:

1. Requested substitution offers Owner a substantial advantage in cost, time, energy conservation, or other considerations, after deducting additional responsibilities Owner must assume. Owner's additional responsibilities may include compensation to Architect for redesign and evaluation services, increased cost of other construction by Owner, and similar considerations.
2. Requested substitution does not require extensive revisions to the Contract Documents.
3. Requested substitution is consistent with the Contract Documents and will produce indicated results.
4. Substitution request is fully documented and properly submitted.
5. Requested substitution will not adversely affect Contractor's Construction Schedule.
6. Requested substitution has received necessary approvals of authorities having jurisdiction.
7. Requested substitution is compatible with other portions of the Work.
8. Requested substitution has been coordinated with other portions of the Work.
9. Requested substitution provides specified warranty.

2.3 COMPARABLE PRODUCTS

A. Conditions: Architect will consider Contractor's request for comparable product when the following conditions are satisfied. If the following conditions are not satisfied, Architect will return requests without action, except to record noncompliance with these requirements:

1. Evidence that the proposed product does not require extensive revisions to the Contract Documents, that it is consistent with the Contract Documents and will produce the indicated results, and that it is compatible with other portions of the Work.
2. Detailed comparison of significant qualities of proposed product with those named in the Specifications. Significant qualities include attributes such as performance, weight, size, durability, visual effect, and specific features and requirements indicated.
3. Evidence that proposed product provides specified warranty.
4. List of similar installations for completed projects with project names and addresses and names and addresses of architects and owners, if requested.
5. Samples, if requested.

PART 3 - EXECUTION (Not Used)

END OF SECTION 016000

JEFFERSON COUNTY ENGINEERING DEPARTMENT
JCSO HANGAR BUILDING

SECTION 017300 - EXECUTION

PART 1 - GENERAL

1.1 SUMMARY

A. This Section includes general procedural requirements governing execution of the Work including, but not limited to, the following:

1. Construction layout.
2. Field engineering and surveying.
3. General installation of products.
4. Progress cleaning.
5. Starting and adjusting.
6. Protection of installed construction.
7. Correction of the Work.

B. See Division 01 Section "Closeout Procedures" for submitting final property survey with Project Record Documents, recording of Owner-accepted deviations from indicated lines and levels, and final cleaning.

1.2 SUBMITTALS

A. Certificates: Submit certificate signed by professional engineer certifying that location and elevation of improvements comply with requirements.

B. Landfill Receipts: Submit copy of receipts issued by a landfill facility, licensed to accept hazardous materials, for hazardous waste disposal.

C. Certified Surveys: Submit two copies signed by professional engineer.

D. Final Property Survey: Submit 10 copies showing the Work performed and record survey data.

1.3 QUALITY ASSURANCE

A. Land Surveyor Qualifications: A professional land surveyor who is legally qualified to practice in jurisdiction where Project is located and who is experienced in providing land-surveying services of the kind indicated.

PART 2 - PRODUCTS (Not Used)

PART 3 - EXECUTION

3.1 EXAMINATION

A. Existing Conditions: The existence and location of site improvements, utilities, and other construction indicated as existing are not guaranteed. Before beginning work, investigate and verify the existence and location of mechanical and electrical systems and other construction affecting the Work.

1. Before construction, verify the location and points of connection of utility services.

B. Existing Utilities: The existence and location of underground and other utilities and construction indicated as existing are not guaranteed. Before beginning sitework, investigate and verify the existence and location of underground utilities and other construction affecting the Work.

1. Before construction, verify the location and invert elevation at points of connection of sanitary sewer, storm sewer, and water-service piping; and underground electrical services.
2. Furnish location data for work related to Project that must be performed by public utilities serving Project site.

C. Acceptance of Conditions: Examine substrates, areas, and conditions, with Installer or Applicator present where indicated, for compliance with requirements for installation tolerances and other conditions affecting performance. Record observations.

1. Verify compatibility with and suitability of substrates, including compatibility with existing finishes or primers.
2. Examine roughing-in for mechanical and electrical systems to verify actual locations of connections before equipment and fixture installation.
3. Examine walls, floors, and roofs for suitable conditions where products and systems are to be installed.
4. Proceed with installation only after unsatisfactory conditions have been corrected. Proceeding with the Work indicates acceptance of surfaces and conditions.

3.2 PREPARATION

A. Existing Utility Information: Furnish information to local utility that is necessary to adjust, move, or relocate existing utility structures, utility poles, lines, services, or other utility appurtenances located in or affected by construction. Coordinate with authorities having jurisdiction.

B. Field Measurements: Take field measurements as required to fit the Work properly. Recheck measurements before installing each product. Where portions of the Work are indicated to fit to other construction, verify dimensions of other construction by field

measurements before fabrication. Coordinate fabrication schedule with construction progress to avoid delaying the Work.

C. Space Requirements: Verify space requirements and dimensions of items shown diagrammatically on Drawings.

D. Review of Contract Documents and Field Conditions: Immediately on discovery of the need for clarification of the Contract Documents, submit a request for information to Architect. Include a detailed description of problem encountered, together with recommendations for changing the Contract Documents.

3.3 CONSTRUCTION LAYOUT

A. Verification: Before proceeding to lay out the Work, verify layout information shown on Drawings, in relation to the property survey and existing benchmarks. If discrepancies are discovered, notify Architect promptly.

B. General: Engage a professional engineer to lay out the Work using accepted surveying practices.

1. Establish benchmarks and control points to set lines and levels at each story of construction and elsewhere as needed to locate each element of Project.
2. Establish dimensions within tolerances indicated. Do not scale Drawings to obtain required dimensions.
3. Inform installers of lines and levels to which they must comply.
4. Check the location, level and plumb, of every major element as the Work progresses.
5. Notify Architect when deviations from required lines and levels exceed allowable tolerances.
6. Close site surveys with an error of closure equal to or less than the standard established by authorities having jurisdiction.

C. Site Improvements: Locate and lay out site improvements, including pavements, grading, fill and topsoil placement, utility slopes, and invert elevations.

D. Building Lines and Levels: Locate and lay out control lines and levels for structures, building foundations, column grids, and floor levels, including those required for mechanical and electrical work. Transfer survey markings and elevations for use with control lines and levels. Level foundations and piers from two or more locations.

E. Record Log: Maintain a log of layout control work. Record deviations from required lines and levels. Include beginning and ending dates and times of surveys, weather conditions, name and duty of each survey party member, and types of instruments and tapes used. Make the log available for reference by Architect.

3.4 FIELD ENGINEERING

A. Reference Points: Locate existing permanent benchmarks, control points, and similar reference points before beginning the Work. Preserve and protect permanent benchmarks and control points during construction operations.

B. Benchmarks: Establish and maintain a minimum of two permanent benchmarks on Project site, referenced to data established by survey control points. Comply with authorities having jurisdiction for type and size of benchmark.

1. Record benchmark locations, with horizontal and vertical data, on Project Record Documents.

C. Certified Survey: On completion of foundation walls, major site improvements, and other work requiring field-engineering services, prepare a certified survey showing dimensions, locations, angles, and elevations of construction and sitework.

D. Final Property Survey: Prepare a final property survey showing significant features (real property) for Project. Include on the survey a certification, signed by professional engineer, that principal metes, bounds, lines, and levels of Project are accurately positioned as shown on the survey.

1. Recording: At Substantial Completion, have the final property survey recorded by or with authorities having jurisdiction as the official "property survey."

3.5 INSTALLATION

A. General: Locate the Work and components of the Work accurately, in correct alignment and elevation, as indicated.

1. Make vertical work plumb and make horizontal work level.
2. Where space is limited, install components to maximize space available for maintenance and ease of removal for replacement.
3. Conceal pipes, ducts, and wiring in finished areas, unless otherwise indicated.

B. Comply with manufacturer's written instructions and recommendations for installing products in applications indicated.

C. Install products at the time and under conditions that will ensure the best possible results. Maintain conditions required for product performance until Substantial Completion.

D. Conduct construction operations so no part of the Work is subjected to damaging operations or loading in excess of that expected during normal conditions of occupancy.

E. Tools and Equipment: Do not use tools or equipment that produce harmful noise levels.

F. Templates: Obtain and distribute to the parties involved templates for work specified to be factory prepared and field installed. Check Shop Drawings of other work to confirm that adequate provisions are made for locating and installing products to comply with indicated requirements.

G. Anchors and Fasteners: Provide anchors and fasteners as required to anchor each component securely in place, accurately located and aligned with other portions of the Work.

1. Mounting Heights: Where mounting heights are not indicated, mount components at heights directed by Architect.
2. Allow for building movement, including thermal expansion and contraction.
3. Coordinate installation of anchorages. Furnish setting drawings, templates, and directions for installing anchorages, including sleeves, concrete inserts, anchor bolts, and items with integral anchors, that are to be embedded in concrete or masonry. Deliver such items to Project site in time for installation.

H. Joints: Make joints of uniform width. Where joint locations in exposed work are not indicated, arrange joints for the best visual effect. Fit exposed connections together to form hairline joints.

I. Hazardous Materials: Use products, cleaners, and installation materials that are not considered hazardous.

3.6 PROGRESS CLEANING

A. General: Clean Project site and work areas daily, including common areas. Coordinate progress cleaning for joint-use areas where more than one installer has worked. Enforce requirements strictly. Dispose of materials lawfully.

1. Comply with requirements in NFPA 241 for removal of combustible waste materials and debris.
2. Do not hold materials more than 7 days during normal weather or 3 days if the temperature is expected to rise above 80 deg F (27 deg C).
3. Containerize hazardous and unsanitary waste materials separately from other waste. Mark containers appropriately and dispose of legally, according to regulations.

B. Site: Maintain Project site free of waste materials and debris.

C. Work Areas: Clean areas where work is in progress to the level of cleanliness necessary for proper execution of the Work.

1. Remove liquid spills promptly.
2. Where dust would impair proper execution of the Work, broom-clean or vacuum the entire work area, as appropriate.

D. Installed Work: Keep installed work clean. Clean installed surfaces according to written instructions of manufacturer or fabricator of product installed, using only cleaning materials specifically recommended. If specific cleaning materials are not

recommended, use cleaning materials that are not hazardous to health or property and that will not damage exposed surfaces.

E. Concealed Spaces: Remove debris from concealed spaces before enclosing the space.

F. Exposed Surfaces in Finished Areas: Clean exposed surfaces and protect as necessary to ensure freedom from damage and deterioration at time of Substantial Completion.

G. Waste Disposal: Burying or burning waste materials on-site will not be permitted. Washing waste materials down sewers or into waterways will not be permitted.

H. During handling and installation, clean and protect construction in progress and adjoining materials already in place. Apply protective covering where required to ensure protection from damage or deterioration at Substantial Completion.

I. Clean and provide maintenance on completed construction as frequently as necessary through the remainder of the construction period. Adjust and lubricate operable components to ensure operability without damaging effects.

J. Limiting Exposures: Supervise construction operations to assure that no part of the construction, completed or in progress, is subject to harmful, dangerous, damaging, or otherwise deleterious exposure during the construction period.

3.7 STARTING AND ADJUSTING

A. Start equipment and operating components to confirm proper operation. Remove malfunctioning units, replace with new units, and retest.

B. Adjust operating components for proper operation without binding. Adjust equipment for proper operation.

C. Test each piece of equipment to verify proper operation. Test and adjust controls and safeties. Replace damaged and malfunctioning controls and equipment.

D. Manufacturer's Field Service: If a factory-authorized service representative is required to inspect field-assembled components and equipment installation, comply with qualification requirements in Division 01 Section "Quality Requirements."

3.8 PROTECTION OF INSTALLED CONSTRUCTION

A. Provide final protection and maintain conditions that ensure installed Work is without damage or deterioration at time of Substantial Completion.

B. Comply with manufacturer's written instructions for temperature and relative humidity.

3.9 CORRECTION OF THE WORK

A. Repair or remove and replace defective construction. Restore damaged substrates and finishes.

1. Repairing includes replacing defective parts, refinishing damaged surfaces, touching up with matching materials, and properly adjusting operating equipment.

B. Restore permanent facilities used during construction to their specified condition.

C. Remove and replace damaged surfaces that are exposed to view if surfaces cannot be repaired without visible evidence of repair.

D. Repair components that do not operate properly. Remove and replace operating components that cannot be repaired.

E. Remove and replace chipped, scratched, and broken glass or reflective surfaces.

END OF SECTION 017300

JEFFERSON COUNTY ENGINEERING DEPARTMENT
JCSO HANGAR BUILDING

SECTION 017700 - CLOSEOUT PROCEDURES

PART 1 - GENERAL

1.1 SUMMARY

A. This Section includes administrative and procedural requirements for contract closeout, including, but not limited to, the following:

1. Inspection procedures.
2. Warranties.
3. Final cleaning.

B. See Division 01 Section "Payment Procedures" for requirements for Applications for Payment for Substantial and Final Completion.

C. See Division 01 Section "Project Record Documents" for submitting Record Drawings, Record Specifications, and Record Product Data.

D. See Division 01 Section "Operation and Maintenance Data" for operation and maintenance manual requirements.

E. See Divisions 02 through 49 Sections for specific closeout and special cleaning requirements for the Work in those Sections.

1.2 SUBSTANTIAL COMPLETION

A. Preliminary Procedures: Before requesting inspection for determining date of Substantial Completion, complete the following. List items below that are incomplete in request.

1. Prepare a list of items to be completed and corrected (punch list), the value of items on the list, and reasons why the Work is not complete.
2. Advise Owner of pending insurance changeover requirements.
3. Submit specific warranties, workmanship bonds, maintenance service agreements, final certifications, and similar documents.
4. Obtain and submit releases permitting Owner unrestricted use of the Work and access to services and utilities. Include occupancy permits, operating certificates, and similar releases.
5. Prepare and submit Project Record Documents, operation and maintenance manuals, Final Completion construction photographs, damage or settlement surveys, property surveys, and similar final record information.
6. Deliver tools, spare parts, extra materials, and similar items to location designated by Owner. Label with manufacturer's name and model number where applicable.
7. Make final changeover of permanent locks and deliver keys to Owner. Advise Owner's personnel of changeover in security provisions.

8. Complete startup testing of systems.
9. Submit test/adjust/balance records.
10. Terminate and remove temporary facilities from Project site, along with mockups, construction tools, and similar elements.
11. Advise Owner of changeover in heat and other utilities.
12. Submit changeover information related to Owner's occupancy, use, operation, and maintenance.
13. Complete final cleaning requirements, including touchup painting.
14. Touch up and otherwise repair and restore marred exposed finishes to eliminate visual defects.

B. Inspection: Submit a written request for inspection for Substantial Completion. On receipt of request, Architect will either proceed with inspection or notify Contractor of unfulfilled requirements. Architect will prepare the Certificate of Substantial Completion after inspection or will notify Contractor of items, either on Contractor's list or additional items identified by Architect, that must be completed or corrected before certificate will be issued.

1. Re-inspection: Request re-inspection when the Work identified in previous inspections as incomplete is completed or corrected.
2. Results of completed inspection will form the basis of requirements for Final Completion.

1.3 FINAL COMPLETION

A. Preliminary Procedures: Before requesting final inspection for determining date of Final Completion, complete the following:

1. Submit a final Application for Payment according to Division 01 Section "Payment Procedures."
2. Submit certified copy of Architect's Substantial Completion inspection list of items to be completed or corrected (punch list), endorsed and dated by Architect. The certified copy of the list shall state that each item has been completed or otherwise resolved for acceptance.
3. Submit evidence of final, continuing insurance coverage complying with insurance requirements.
4. Submit pest-control final inspection report and warranty.
5. Instruct Owner's personnel in operation, adjustment, and maintenance of products, equipment, and systems.

B. Inspection: Submit a written request for final inspection for acceptance. On receipt of request, Architect will either proceed with inspection or notify Contractor of unfulfilled requirements. Architect will prepare a final Certificate for Payment after inspection or will notify Contractor of construction that must be completed or corrected before certificate will be issued.

1. Re-inspection: Request re-inspection when the Work identified in previous inspections as incomplete is completed or corrected.

1.4 LIST OF INCOMPLETE ITEMS (PUNCH LIST)

A. Preparation: Submit three copies of list. Include name and identification of each space and area affected by construction operations for incomplete items and items needing correction including, if necessary, areas disturbed by Contractor that are outside the limits of construction.

1. Organize list of spaces in sequential order, starting with exterior areas first and proceeding from lowest floor to highest floor.
2. Organize items applying to each space by major element, including categories for ceiling, individual walls, floors, equipment, and building systems.

1.5 WARRANTIES

A. Submittal Time: Submit written warranties on request of Architect for designated portions of the Work where commencement of warranties other than date of Substantial Completion is indicated.

B. Organize warranty documents into an orderly sequence based on the table of contents of the Project Manual.

1. Bind warranties and bonds in heavy-duty, 3-ring, vinyl-covered, loose-leaf binders, thickness as necessary to accommodate contents, and sized to receive 8-1/2-by-11-inch (215-by-280-mm) paper.
2. Provide heavy paper dividers with plastic-covered tabs for each separate warranty. Mark tab to identify the product or installation. Provide a typed description of the product or installation, including the name of the product and the name, address, and telephone number of Installer.
3. Identify each binder on the front and spine with the typed or printed title "WARRANTIES," Project name, and name of Contractor.

C. Provide additional copies of each warranty to include in operation and maintenance manuals.

PART 2 - PRODUCTS

2.1 MATERIALS

A. Cleaning Agents: Use cleaning materials and agents recommended by manufacturer or fabricator of the surface to be cleaned. Do not use cleaning agents that are potentially hazardous to health or property or that might damage finished surfaces.

PART 3 - EXECUTION

3.1 FINAL CLEANING

A. General: Provide final cleaning. Conduct cleaning and waste-removal operations to comply with local laws and ordinances and Federal and local environmental and antipollution regulations.

B. Cleaning: Employ experienced workers or professional cleaners for final cleaning. Clean each surface or unit to condition expected in an average commercial building cleaning and maintenance program. Comply with manufacturer's written instructions.

1. Complete the following cleaning operations before requesting inspection for certification of Substantial Completion for entire Project or for a portion of Project:

a. Clean Project site, yard, and grounds, in areas disturbed by construction activities, including landscape development areas, of rubbish, waste material, litter, and other foreign substances.
b. Sweep paved areas broom clean. Remove petrochemical spills, stains, and other foreign deposits.
c. Rake grounds that are neither planted nor paved to a smooth, even-textured surface.
d. Remove tools, construction equipment, machinery, and surplus material from Project site.
e. Remove snow and ice to provide safe access to building.
f. Clean exposed exterior and interior hard-surfaced finishes to a dirt-free condition, free of stains, films, and similar foreign substances. Avoid disturbing natural weathering of exterior surfaces. Restore reflective surfaces to their original condition.
g. Remove debris and surface dust from limited access spaces, including roofs, plenums, shafts, trenches, equipment vaults, manholes, attics, and similar spaces.
h. Sweep concrete floors broom clean in unoccupied spaces.
i. Vacuum carpet and similar soft surfaces, removing debris and excess nap; shampoo if visible soil or stains remain.
j. Clean transparent materials, including mirrors and glass in doors and windows. Remove glazing compounds and other noticeable, vision-obscuring materials. Replace chipped or broken glass and other damaged transparent materials. Polish mirrors and glass, taking care not to scratch surfaces.
k. Remove labels that are not permanent.
l. Touch up and otherwise repair and restore marred, exposed finishes and surfaces. Replace finishes and surfaces that cannot be satisfactorily repaired or restored or that already show evidence of repair or restoration.

1) Do not paint over "UL" and similar labels, including mechanical and electrical nameplates.

m. Wipe surfaces of mechanical and electrical equipment, elevator equipment, and similar equipment. Remove excess lubrication, paint and mortar droppings, and other foreign substances.
n. Replace parts subject to unusual operating conditions.
o. Clean plumbing fixtures to a sanitary condition, free of stains, including stains resulting from water exposure.
p. Replace disposable air filters and clean permanent air filters. Clean exposed surfaces of diffusers, registers, and grills.
q. Clean light fixtures, lamps, globes, and reflectors to function with full efficiency. Replace burned-out bulbs, and those noticeably dimmed by hours of use, and defective and noisy starters in fluorescent and mercury vapor fixtures to comply with requirements for new fixtures.
r. Leave Project clean and ready for occupancy.

C. Pest Control: Engage an experienced, licensed exterminator to make a final inspection and rid Project of rodents, insects, and other pests. Prepare a report.

D. Comply with safety standards for cleaning. Do not burn waste materials. Do not bury debris or excess materials on Owner's property. Do not discharge volatile, harmful, or dangerous materials into drainage systems. Remove waste materials from Project site and dispose of lawfully.

END OF SECTION 017700

JEFFERSON COUNTY ENGINEERING DEPARTMENT
JCSO HANGAR BUILDING

SECTION 017823 - OPERATION AND MAINTENANCE DATA

PART 1 - GENERAL

1.1 SUMMARY

A. This Section includes administrative and procedural requirements for preparing operation and maintenance manuals, including the following:

1. Emergency manuals.
2. Operation manuals for systems, subsystems, and equipment.
3. Maintenance manuals for the care and maintenance of products, materials, and finishes, systems and equipment.

B. See Divisions 02 through 49 Sections for specific operation and maintenance manual requirements for the Work in those Sections.

1.2 SUBMITTALS

A. Manual: Submit one copy of each manual in final form at least 15 days before final inspection. Architect will return copy with comments within 15 days after final inspection.

1. Correct or modify each manual to comply with Architect's comments. Submit 3 copies of each corrected manual within 15 days of receipt of Architect's comments.

PART 2 - PRODUCTS

2.1 MANUALS, GENERAL

A. Organization: Unless otherwise indicated, organize each manual into a separate section for each system and subsystem, and a separate section for each piece of equipment not part of a system. Each manual shall contain a title page, table of contents, and manual contents.

B. Title Page: Enclose title page in transparent plastic sleeve. Include the following information:

1. Subject matter included in manual.
2. Name and address of Project.
3. Name and address of Owner.
4. Date of submittal.
5. Name, address, and telephone number of Contractor.
6. Name and address of Architect.
7. Cross-reference to related systems in other operation and maintenance manuals.

C. Table of Contents: List each product included in manual, identified by product name, indexed to the content of the volume, and cross-referenced to Specification Section number in Project Manual.

D. Manual Contents: Organize into sets of manageable size. Arrange contents alphabetically by system, subsystem, and equipment. If possible, assemble instructions for subsystems, equipment, and components of one system into a single binder.

1. Binders: Heavy-duty, 3-ring, vinyl-covered, loose-leaf binders, in thickness necessary to accommodate contents, sized to hold 8-1/2-by-11-inch (215-by-280-mm) paper; with clear plastic sleeve on spine to hold label describing contents and with pockets inside covers to hold folded oversize sheets.

    a. Identify each binder on front and spine, with printed title "OPERATION AND MAINTENANCE MANUAL," Project title or name, and subject matter of contents. Indicate volume number for multiple-volume sets.

2. Dividers: Heavy-paper dividers with plastic-covered tabs for each section. Mark each tab to indicate contents. Include typed list of products and major components of equipment included in the section on each divider, cross-referenced to Specification Section number and title of Project Manual.
3. Protective Plastic Sleeves: Transparent plastic sleeves designed to enclose diagnostic software diskettes for computerized electronic equipment.
4. Drawings: Attach reinforced, punched binder tabs on drawings and bind with text.

    a. If oversize drawings are necessary, fold drawings to same size as text pages and use as foldouts.
    b. If drawings are too large to be used as foldouts, fold and place drawings in labeled envelopes and bind envelopes in rear of manual. At appropriate locations in manual, insert typewritten pages indicating drawing titles, descriptions of contents, and drawing locations.

2.2 EMERGENCY MANUALS

A. Content: Organize manual into a separate section for type of emergency, emergency instructions, and emergency procedures.

B. Type of Emergency: Where applicable for each type of emergency indicated below, include instructions and procedures for each system, subsystem, piece of equipment, and component for fire, flood, water leak, power failure, water outage, equipment failure and chemical release or spill.

C. Emergency Instructions: Describe and explain warnings, trouble indications, error messages, and similar codes and signals. Include responsibilities of Owner's operating personnel for notification of Installer, supplier, and manufacturer to maintain warranties.

D. Emergency Procedures: Include instructions on stopping, shutdown instructions for each type of emergency, operating instructions for conditions outside normal operating limits, and required sequences for electric or electronic systems.

2.3 OPERATION MANUALS

A. Content: In addition to requirements in this Section, include operation data required in individual Specification Sections and equipment descriptions, operating standards, operating procedures, operating logs, wiring and control diagrams, and license requirements.

B. Descriptions: Include the following:

1. Product name and model number.
2. Manufacturer's name.
3. Equipment identification with serial number of each component.
4. Equipment function.
5. Operating characteristics.
6. Limiting conditions.
7. Performance curves.
8. Engineering data and tests.
9. Complete nomenclature and number of replacement parts.

C. Operating Procedures: Include start-up, break-in, and control procedures; stopping and normal shutdown instructions; routine, normal, seasonal, and weekend operating instructions; and required sequences for electric or electronic systems.

D. Systems and Equipment Controls: Describe the sequence of operation, and diagram controls as installed.

E. Piped Systems: Diagram piping as installed, and identify color-coding where required for identification.

2.4 PRODUCT MAINTENANCE MANUAL

A. Content: Organize manual into a separate section for each product, material, and finish. Include source information, product information, maintenance procedures, repair materials and sources, and warranties and bonds, as described below.

B. Source Information: List each product included in manual, identified by product name and arranged to match manual's table of contents. For each product, list name, address, and telephone number of Installer or supplier and maintenance service agent, and cross-reference Specification Section number and title in Project Manual.

C. Product Information: Include the following, as applicable:

1. Product name and model number.
2. Manufacturer's name.
3. Color, pattern, and texture.

4. Material and chemical composition.
5. Reordering information for specially manufactured products.

D. Maintenance Procedures: Include manufacturer's written recommendations and inspection procedures, types of cleaning agents, methods of cleaning, schedule for cleaning and maintenance, and repair instructions.

E. Repair Materials and Sources: Include lists of materials and local sources of materials and related services.

F. Warranties and Bonds: Include copies of warranties and bonds and lists of circumstances and conditions that would affect validity of warranties or bonds.

2.5 SYSTEMS AND EQUIPMENT MAINTENANCE MANUAL

A. Content: For each system, subsystem, and piece of equipment not part of a system, include source information, manufacturers' maintenance documentation, maintenance procedures, maintenance and service schedules, spare parts list and source information, maintenance service contracts, and warranty and bond information, as described below.

B. Source Information: List each system, subsystem, and piece of equipment included in manual, identified by product name and arranged to match manual's table of contents. For each product, list name, address, and telephone number of Installer or supplier and maintenance service agent, and cross-reference Specification Section number and title in Project Manual.

C. Manufacturers' Maintenance Documentation: Manufacturers' maintenance documentation including maintenance instructions, drawings and diagrams for maintenance, nomenclature of parts and components, and recommended spare parts for each component part or piece of equipment:

D. Maintenance Procedures: Include test and inspection instructions, troubleshooting guide, disassembly instructions, and adjusting instructions, and demonstration and training videotape if available, that detail essential maintenance procedures:

E. Maintenance and Service Schedules: Include service and lubrication requirements, list of required lubricants for equipment, and separate schedules for preventive and routine maintenance and service with standard time allotment.

F. Spare Parts List and Source Information: Include lists of replacement and repair parts, with parts identified and cross-referenced to manufacturers' maintenance documentation and local sources of maintenance materials and related services.

G. Maintenance Service Contracts: Include copies of maintenance agreements with name and telephone number of service agent.

H. Warranties and Bonds: Include copies of warranties and bonds and lists of circumstances and conditions that would affect validity of warranties or bonds.

PART 3 - EXECUTION

3.1 MANUAL PREPARATION

A. Emergency Manual: Assemble a complete set of emergency information indicating procedures for use by emergency personnel and by Owner's operating personnel for types of emergencies indicated.

B. Product Maintenance Manual: Assemble a complete set of maintenance data indicating care and maintenance of each product, material, and finish incorporated into the Work.

C. Operation and Maintenance Manuals: Assemble a complete set of operation and maintenance data indicating operation and maintenance of each system, subsystem, and piece of equipment not part of a system.

D. Manufacturers' Data: Where manuals contain manufacturers' standard printed data, include only sheets pertinent to product or component installed. Mark each sheet to identify each product or component incorporated into the Work. If data include more than one item in a tabular format, identify each item using appropriate references from the Contract Documents. Identify data applicable to the Work and delete references to information not applicable.

E. Drawings: Prepare drawings supplementing manufacturers' printed data to illustrate the relationship of component parts of equipment and systems and to illustrate control sequence and flow diagrams. Coordinate these drawings with information contained in Record Drawings to ensure correct illustration of completed installation.

   1. Do not use original Project Record Documents as part of operation and maintenance manuals.

F. Comply with Division 01 Section "Closeout Procedures" for schedule for submitting operation and maintenance documentation.

END OF SECTION 017823

JEFFERSON COUNTY ENGINEERING DEPARTMENT
JCSO HANGAR BUILDING

SECTION 017839 - PROJECT RECORD DOCUMENTS

PART 1 - GENERAL

1.1 SUMMARY

A. This Section includes administrative and procedural requirements for Project Record Documents, including the following:

1. Record Drawings.
2. Record Specifications.
3. Record Product Data.

B. See Division 01 Section "Operation and Maintenance Data" for operation and maintenance manual requirements.

C. See Divisions 02 through 49 Sections for specific requirements for Project Record Documents of the Work in those Sections.

1.2 SUBMITTALS

A. Record Drawings: Comply with the following:

1. Number of Copies: Submit two sets of marked-up Record Prints.
2. Number of Copies: Submit copies of Record Drawings as follows:

a. Initial Submittal: Submit one set of corrected Record Transparencies and two sets of marked-up Record Prints. Architect will initial and date each transparency and mark whether general scope of changes, additional information recorded, and quality of drafting are acceptable. Architect will return transparencies and prints for organizing into sets, printing, binding, and final submittal.
b. Final Submittal: Submit two sets of marked-up Record Prints, and the following:

1) Record Transparencies: One set.
2) Copies printed from Record Transparencies: Two. Print each Drawing, whether or not changes and additional information were recorded.

B. Record Specifications: Submit two copies of Project's Specifications, including addenda and contract modifications.

C. Record Product Data: two copies of each Product Data submittal.

PART 2 - PRODUCTS

2.1 RECORD DRAWINGS

A. Record Prints: Maintain one set of blue- or black-line white prints of the Contract Drawings and Shop Drawings.

1. Preparation: Mark Record Prints to show the actual installation where installation varies from that shown originally. Require individual or entity who obtained record data, whether individual or entity is Installer, subcontractor, or similar entity, to prepare the marked-up Record Prints.

a. Give particular attention to information on concealed elements that would be difficult to identify or measure and record later.
b. Record data as soon as possible after obtaining it. Record and check the markup before enclosing concealed installations.

2. Mark the Contract Drawings or Shop Drawings, whichever is most capable of showing actual physical conditions, completely and accurately. If Shop Drawings are marked, show cross-reference on the Contract Drawings.
3. Mark record sets with erasable, red-colored pencil. Use other colors to distinguish between changes for different categories of the Work at same location.
4. Note Construction Change Directive numbers, alternate numbers, Change Order numbers, and similar identification, where applicable.

B. Record Transparencies: Immediately before inspection for Certificate of Substantial Completion, review marked-up Record Prints with Architect. When authorized, prepare a full set of corrected transparencies of the Contract Drawings and Shop Drawings.

1. Incorporate changes and additional information previously marked on Record Prints. Erase, redraw, and add details and notations where applicable.
2. Refer instances of uncertainty to Architect for resolution.
3. Owner will furnish Contractor one set of transparencies of the Contract Drawings for use in recording information.
4. Print the Contract Drawings and Shop Drawings for use as Record Transparencies. Architect will make the Contract Drawings available to Contractor's print shop.

C. Format: Identify and date each Record Drawing; include the designation "PROJECT RECORD DRAWING" in a prominent location.

1. Record Prints: Organize Record Prints and newly prepared Record Drawings into manageable sets. Bind each set with durable paper cover sheets. Include identification on cover sheets.
2. Record Transparencies: Organize into unbound sets matching Record Prints. Place transparencies in durable tube-type drawing containers with end caps. Mark end cap of each container with identification. If container does not include a complete set, identify Drawings included.

3. Record CAD Drawings: Organize CAD information into separate electronic files that correspond to each sheet of the Contract Drawings. Name each file with the sheet identification. Include identification in each CAD file.
4. Identification: As follows:

    a. Project name.
    b. Date.
    c. Designation "PROJECT RECORD DRAWINGS."
    d. Name of Architect.
    e. Name of Contractor.

2.2 RECORD SPECIFICATIONS

A. Preparation: Mark Specifications to indicate the actual product installation where installation varies from that indicated in Specifications, addenda, and contract modifications.

1. Give particular attention to information on concealed products and installations that cannot be readily identified and recorded later.
2. Mark copy with the proprietary name and model number of products, materials, and equipment furnished, including substitutions and product options selected.
3. Record the name of manufacturer, supplier, Installer, and other information necessary to provide a record of selections made.
4. Note related Change Orders, Record Product Data, and Record Drawings where applicable.

2.3 RECORD PRODUCT DATA

A. Preparation: Mark Product Data to indicate the actual product installation where installation varies substantially from that indicated in Product Data submittal.

1. Give particular attention to information on concealed products and installations that cannot be readily identified and recorded later.
2. Include significant changes in the product delivered to Project site and changes in manufacturer's written instructions for installation.
3. Note related Change Orders, Record Specifications, and Record Drawings where applicable.

2.4 MISCELLANEOUS RECORD SUBMITTALS

A. Assemble miscellaneous records required by other Specification Sections for miscellaneous record keeping and submittal in connection with actual performance of the Work. Bind or file miscellaneous records and identify each, ready for continued use and reference.

PART 3 - EXECUTION

3.1 RECORDING AND MAINTENANCE

A. Recording: Maintain one copy of each submittal during the construction period for Project Record Document purposes. Post changes and modifications to Project Record Documents as they occur; do not wait until the end of Project.

B. Maintenance of Record Documents and Samples: Store Record Documents and Samples in the field office apart from the Contract Documents used for construction. Do not use Project Record Documents for construction purposes. Maintain Record Documents in good order and in a clean, dry, legible condition, protected from deterioration and loss. Provide access to Project Record Documents for Architect's reference during normal working hours.

END OF SECTION 017839

JEFFERSON COUNTY ENGINEERING DEPARTMENT
JCSO HANGAR BUILDING

SECTION 021000 - PROTECTION OF ENVIRONMENT

PART 1 - GENERAL

1.1 SUMMARY

A. This section covers all work necessary to comply with the requirements of the Owner and Contractor furnished permits and all applicable Federal, State, and local laws governing this Work and for implementing, installing, and maintaining all required Best Management Practices (BMPs).

1.2 SUBMITTALS

A. Develop and submit a Storm Water Pollution Prevention Plan (SWPPP). The SWPPP shall, at a minimum include and address the following:

1. Site map which shows the construction site perimeter, stormwater collection and discharge points, and drainage patterns across the project.
2. Description of BMP's and Drawings
3. Installation, Maintenance, and Inspection Procedures
4. BMP Removal

B. The Contractor shall develop and submit a copy of the SWPPP to the Engineer for review 10 days prior to the start of any onsite construction activities. The SWPPP shall be submitted in accordance with Section 013300.

C. Product specification and product sample proposed for use as soil retention blanket shall be submitted to the Engineer for review, within five days after issuance of a Notice to Proceed.

PART 2 - PRODUCTS

2.1 GENERAL

A. The Contractor is responsible for the selection and adequacy of all materials and equipment used for compliance with the Owner and Contractor supplied the permits.

2.2 SEEDING FOR EROSION CONTROL

A. Seed for erosion control shall conform to the requirements outlined in the TXDOT Standard Specification Section 164.2. The varieties and species of seed shall be from the types specified in Tables 1 through 4 of TXDOT Standard Specification Section 164.2(A).

PART 3 - EXECUTION

3.1 GENERAL

A. All debris or deleterious material resulting from construction shall be removed from the work area and prevented from entering waters of the State.

B. All work operations shall be conducted in a manner that causes little or no adverse environmental impact to adjacent areas. If at any time, as a result of project activities, water quality problems develop (including equipment leaks or spills), operations shall cease and the Owner shall be contacted immediately.

C. Heavy equipment operating within wetlands shall be placed on mats or other measures taken to minimize soil disturbance.

3.2 SEEDING FOR EROSION CONTROL

A. All newly constructed soil slopes, fill areas, and areas disturbed during construction shall be seeded upon completion of construction.

B. Seeding for erosion control shall be installed at the locations shown on the Plans, as specified herein, and in accordance with TXDOT Standard Specification 164.3.

C. Seeding mixture shall conform to the requirements of TXDOT Standard Specification 164.2.

D. Cellulose fiber mulch seeding shall be utilized for all areas requiring seeding for erosion control in accordance with TXDOT Standard Specification 164.3(C) for Clay Soils.

3.3 PROTECTION OF ENVIRONMENTAL RESOURCES

A. The environmental resources within the project boundaries and those affected outside the limits of permanent work under this contract shall be protected during the entire period of this contract. The Contractor shall confine his activities to areas defined by the drawings and specifications. Environmental protection shall be as stated in the following paragraphs.

3.4 PROTECTION OF LAND RESOURCES

A. Prior to the beginning of any construction, the Contractor shall identify all land resources to be approved by the Engineer. The Contractor shall not remove, cut, deface, injure, or destroy land resources including trees, shrubs, vines, grasses, topsoil, and landforms without special permission from the Owner. No ropes, cables, or guys shall be fastened to or attached to any trees for anchorage unless specifically authorized. Where such special emergency use is permitted, the Contractor shall

provide effective protection for land and vegetation resources at all times as defined in the following subparagraphs.

3.5 PROTECTION OF WATER RESOURCES

A. The Contractor shall keep construction activities under surveillance, management and control to avoid pollution of surface and ground waters. Special management techniques as set out below shall be implemented to control water pollution by the listed construction activities, which are included in this contract. As soon as possible the contractor shall clear all waterways of temporary embankments, temporary bridges, matting, falsework, debris, or other obstructions placed during construction operations that are not part of the finished work. The Contractor is responsible for maintaining area drainage during construction. Water shall not be allowed to pond on any roadway surface, and Project Work shall not impede runoff from adjacent properties.

3.6 PROTECTION OF FISH AND WILDLIFE RESOURCES

A. The Contractor shall keep construction activities under surveillance, management, and control to minimize interference with, disturbance to and damage of fish and wildlife. Species that require specific attention along with measures for their protection will be listed by the Contractor prior to beginning of construction operations.

3.7 CONSTRUCTION DEBRIS

A. The Contractor shall collect and properly dispose all trash and construction debris in accordance with all local and state solid waste management regulations and practices. No construction waste material shall be buried on the Project Site. The Contractor shall store all waste materials in approved metal dumpsters, or other containers approved by the Engineer. The dumpster shall be emptied as necessary or as required by local and state regulation, and the contents hauled away for proper disposal. No construction waste material shall be buried within the Project limits.

3.8 EQUIPMENT MAINTENANCE

A. The Contractor’s equipment used in excavation and filling operations shall be inspected, cleaned, and maintained to prevent loss of petroleum products.

3.9 EROSION AND SEDIMENT CONTROL

A. Burn-off: Burn-off of ground cover is not permitted.

B. Erosion Protection: Earthwork brought to final grade shall be immediately finished. Protect side and back slopes upon completion of rough grading. Plan and conduct earthwork to minimize the duration of exposure of unprotected soils. All areas disturbed that are to remain dormant for longer than 21 calendar days shall be temporarily stabilized with fast germinating temporary seed or shall be protected by

mulch. Temporary stabilization shall be in place within 14 days of last disturbance. Adequate seeding and vegetative cover shall be maintained. A ground cover density of 70% or greater must be maintained. The contractor shall re-seed, water, and fertilize as necessary to maintain ground cover. Use the following methods to prevent erosion, control sedimentation, and prevent waterborne soil from entering surface waters and ditches for all areas of excavation, clearing and grubbing, and earth fill.

1. Mechanical Control: Divert runoff by constructing ditches or berms, and then filter runoff using filter fabric dams, sandbag berms, or other methods approved by the Engineer.

3.10 SEDIMENT CONTROL

A. Prior to project initiation, the upland project construction areas must be isolated from water bodies by the use of BMPs to confine sediment. BMPs used for sedimentation control shall include at least one of the following:

1. Silt Fencing
2. Straw Bale Dikes
3. Diversion Dikes

B. As construction progresses and unexpected seasonal conditions dictate, more sedimentation control facilities may be required to ensure sufficient siltation control is maintained. Therefore, during the course of the project, the Contractor shall review the in-place sedimentation control systems and provide additional facilities and structures as required to protect adjacent wetlands and waters.

3.11 EROSION CONTROL

A. Disturbed areas must be stabilized to prevent the introduction of sediment to adjacent wetlands or water bodies during wet weather conditions (erosion). At least one of the following BMPs must be maintained and in place until the excavation, cleared and grubbed, and earthfill areas have been stabilized:

1. Mulch
2. Temporary Vegetation

PART 4 - MEASUREMENT AND PAYMENT

4.1 SEEDING FOR EROSION CONTROL

A. Measurement: No measurement for Seeding work of this Section will be made.

B. Payment: Payment for Seeding work of this Section will be made subsidiary to the lump sum (LS) amount for this project.

END OF SECTION 021000

JEFFERSON COUNTY ENGINEERING DEPARTMENT
JCSO HANGAR BUILDING

SECTION 033000 - CAST-IN-PLACE CONCRETE

PART 1 - GENERAL

1.1 SUMMARY

A. This Section specifies cast-in place concrete, including formwork, reinforcement, concrete materials, mixture design, placement procedures, and finishes.

B. See Division 31 Section "Earth Moving" for drainage fill under slabs-on-grade.

1.2 SUBMITTALS

A. Product Data: For each type of product indicated.

B. Design Mixtures: For each concrete mixture.

C. Shop Drawings: For steel reinforcement and formwork. Material test reports.

1.3 QUALITY ASSURANCE

A. Manufacturer Qualifications: A firm experienced in manufacturing ready-mixed concrete products and that complies with ASTM C 94/C 94M requirements for production facilities and equipment.

1. Manufacturer certified according to NRMCA's "Certification of Ready Mixed Concrete Production Facilities."

B. ACI Publications: Comply with the following unless modified by requirements in the Contract Documents:

1. ACI 301, "Specification for Structural Concrete," Sections 1 through 5.
2. ACI 117, "Specifications for Tolerances for Concrete Construction and Materials."

C. Preinstallation Conference: Conduct conference at Project site.

PART 2 - PRODUCTS

2.1 FORM-FACING MATERIALS

A. Smooth-Formed Finished Concrete: Form-facing panels that will provide continuous, true, and smooth concrete surfaces. Furnish in largest practicable sizes to minimize number of joints.

B. Rough-Formed Finished Concrete: Plywood, lumber, metal, or another approved material. Provide lumber dressed on at least two edges and one side for tight fit.

2.2 STEEL REINFORCEMENT

A. Reinforcing Bars: ASTM A 615/A 615M, Grade 60, deformed.

B. Plain-Steel Welded Wire Reinforcement: ASTM A 185, plain, fabricated from as-drawn steel wire into flat sheets.

C. Bar Supports: Bolsters, chairs, spacers, and other devices for spacing, supporting, and fastening reinforcing bars and welded wire reinforcement in place. Manufacture bar supports from steel wire, plastic, or precast concrete according to CRSI's "Manual of Standard Practice."

2.3 CONCRETE MATERIALS

A. Cementitious Material: Use the following cementitious materials, of the same type, brand, and source, throughout Project:

1. Portland Cement: ASTM C 150, Type II.

B. Normal-Weight Aggregates: ASTM C 33, graded, 3/4-inch nominal maximum coarse-aggregate size.

1. Fine Aggregate: Free of materials with deleterious reactivity to alkali in cement.

C. Water: ASTM C 94/C 94M.

D. Air-Entraining Admixture: ASTM C 260.

E. Chemical Admixtures: Provide admixtures certified by manufacturer to be compatible with other admixtures and that will not contribute water-soluble chloride ions exceeding those permitted in hardened concrete. Do not use calcium chloride or admixtures containing calcium chloride.

1. Water-Reducing Admixture: ASTM C 494/C 494M, Type A.
2. Retarding Admixture: ASTM C 494/C 494M, Type B.

F. Set-Retarding Admixture: Set-retarding admixture shall conform to ASTM C4994, Type A or D. All concrete shall contain Master Builders Pozzolith 100-XR, or equal, set retarding admixture, which shall be used at the rate recommended by the manufacturer if the concrete can not be placed within 1-1/2 hours of batching.

G. Other Admixtures: Anti-freeze liquids, salts, calcium chloride, or other similar materials shall not be used in concrete unless specifically authorized in writing by the Engineer prior to construction.

H. Concrete Slab Coating: Thompson’s Waterseal.

2.4 VAPOR RETARDERS

A. Plastic Vapor Retarder: ASTM E 1745. Include manufacturer's recommended adhesive or pressure-sensitive tape.

2.5 CURING MATERIALS

A. Moisture-Retaining Cover: ASTM C 171, polyethylene film or white burlap-polyethylene sheet.

B. Water: Potable.

2.6 RELATED MATERIALS

A. Expansion- and Isolation-Joint-Filler Strips: ASTM D 1751, asphalt-saturated cellulosic fiber.

B. Flexible Joint Sealant: Thiokol 2235SL or Engineer approved equivalent.

2.7 CONCRETE MIXTURES

A. Prepare design mixtures for each type and strength of concrete, proportioned on the basis of laboratory trial mixture or field test data, or both, according to ACI 301.

B. Proportion normal-weight concrete mixture as follows:

1. Minimum Compressive Strength: 4000 psi at 28 days.
2. Maximum Water-Cementitious Materials Ratio: 0.40.
3. Slump Limit: 5 inch maximum, 2 inch minimum. Slump may be increased when approved chemical admixtures are used, provided that the concrete admixture has the same water-cement ratio and does not exhibit segregation potential or excessive bleeding.
4. Air Content: Air content must be no less than 4% and must not exceed 6%.

2.8 FABRICATING REINFORCEMENT

A. Fabricate steel reinforcement according to CRSI's "Manual of Standard Practice."

2.9 CONCRETE MIXING

A. Ready-Mixed Concrete: Measure, batch, mix, and deliver concrete according to ASTM C 94/C 94M, and furnish batch ticket information.

1. When air temperature is between 85 and 90 deg F, reduce mixing and delivery time from 1-1/2 hours to 75 minutes; when air temperature is above 90 deg F, reduce mixing and delivery time to 60 minutes.

PART 3 - EXECUTION

3.1 FORMWORK

A. Design, erect, shore, brace, and maintain formwork according to ACI 301 to support vertical, lateral, static, and dynamic loads, and construction loads that might be applied, until structure can support such loads.

B. Construct formwork so concrete members and structures are of size, shape, alignment, elevation, and position indicated, within tolerance limits of ACI 117.

C. Chamfer exterior corners and edges of permanently exposed concrete.

3.2 EMBEDDED ITEMS

A. Place and secure anchorage devices and other embedded items required for adjoining work that is attached to or supported by cast-in-place concrete. Use setting drawings, templates, diagrams, instructions, and directions furnished with items to be embedded.

3.3 VAPOR RETARDERS

A. Plastic Vapor Retarders: Place, protect, and repair vapor retarders according to ASTM E 1643 and manufacturer's written instructions.

1. Lap joints 6 inches and seal with manufacturer's recommended tape.

3.4 STEEL REINFORCEMENT

A. General: Comply with CRSI's "Manual of Standard Practice" for placing reinforcement.

1. Do not cut or puncture vapor retarder. Repair damage and reseal vapor retarder before placing concrete.

3.5 JOINTS

A. General: Construct joints true to line with faces perpendicular to surface plane of concrete.

B. Construction Joints: Install so strength and appearance of concrete are not impaired, at locations indicated on drawings or as approved by Engineer.

C. Contraction Joints in Slabs-on-Grade: Form weakened-plane contraction joints, sectioning concrete into areas as indicated. Construct contraction joints for a depth equal to at least one-fourth of concrete thickness as follows:

1. Sawed Joints: Form contraction joints with power saws equipped with shatterproof abrasive or diamond-rimmed blades. Cut 1/4-inch-wide joints into

concrete when cutting action will not tear, abrade, or otherwise damage surface and before concrete develops random contraction cracks. Fill joint with flexible joint sealant

D. Isolation Joints in Slabs-on-Grade: After removing formwork, install joint-filler strips at slab junctions with vertical surfaces, such as column pedestals, foundation walls, grade beams, and other locations, as indicated.

3.6 CONCRETE PLACEMENT

A. Before placing concrete, verify that installation of formwork, reinforcement, and embedded items is complete and that required inspections have been performed. Contractor must notify the Engineer at least 24 hours before concrete placement for pre-pour inspection.

B. Deposit concrete continuously in one layer or in horizontal layers of such thickness that no new concrete will be placed on concrete that has hardened enough to cause seams or planes of weakness. If a section cannot be placed continuously, provide construction joints as indicated. Deposit concrete to avoid segregation.

1. Consolidate placed concrete with mechanical vibrating equipment according to ACI 301.

C. Cold-Weather Placement: Comply with ACI 306.1.

D. Hot-Weather Placement: Comply with ACI 301.

3.7 FINISHING FORMED SURFACES

A. Smooth-Formed Finish: As-cast concrete texture imparted by form-facing material, arranged in an orderly and symmetrical manner with a minimum of seams. Repair and patch tie holes and defects. Remove fins and other projections that exceed specified limits on formed-surface irregularities.

1. Apply to concrete surfaces exposed to public view.

B. Related Unformed Surfaces: At tops of walls, horizontal offsets, and similar unformed surfaces adjacent to formed surfaces, strike off smooth and finish with a texture matching adjacent formed surfaces. Continue final surface treatment of formed surfaces uniformly across adjacent unformed surfaces, unless otherwise indicated.

3.8 FINISHING FLOORS AND SLABS

A. General: Comply with ACI 302.1R recommendations for screeding, restraightening, and finishing operations for concrete surfaces. Do not wet concrete surfaces.

B. Float Finish: Consolidate surface with power-driven floats or by hand floating if area is small or inaccessible to power driven floats. Restraighten, cut down high spots, and fill

low spots. Repeat float passes and restraightening until surface is left with a uniform, smooth, granular texture.

C. Trowel Finish: After applying float finish, apply first troweling and consolidate concrete by hand or power-driven trowel. Continue troweling passes and restraighten until surface is free of trowel marks and uniform in texture and appearance. Grind smooth any surface defects that would telegraph through applied coatings or floor coverings.

1. Finish and measure surface so gap at any point between concrete surface and an unleveled, freestanding, 10-foot- long straightedge resting on 2 high spots and placed anywhere on the surface does not exceed 1/4 inch.

3.9 CONCRETE PROTECTING AND CURING

A. General: Protect freshly placed concrete from premature drying and excessive cold or hot temperatures. Comply with ACI 306.1 for cold-weather protection and ACI 301 for hot-weather protection during curing.

B. Evaporation Retarder: Apply evaporation retarder to unformed concrete surfaces if hot, dry, or windy conditions cause moisture loss approaching 0.2 lb/sq. ft. x h before and during finishing operations. Apply according to manufacturer's written instructions after placing, screeding, and bull floating or darbying concrete, but before float finishing.

C. Cure concrete according to ACI 308.1, by one or a combination of the following methods:

1. Moisture Curing: Keep surfaces continuously moist for not less than seven days.
2. Moisture-Retaining-Cover Curing: Cover concrete surfaces with moisture-retaining cover for curing concrete, placed in widest practicable width, with sides and ends lapped at least 12 inches, and sealed by waterproof tape or adhesive. Cure for not less than seven days. Immediately repair any holes or tears during curing period using cover material and waterproof tape.

3.10 CONCRETE SURFACE REPAIRS

A. Defective Concrete: Repair and patch defective areas when approved by Engineer. Remove and replace concrete that cannot be repaired and patched to Engineer's approval.

3.11 FIELD QUALITY CONTROL

A. Testing and Inspecting: Contractor will engage a qualified independent testing and inspecting agency to perform field tests and inspections and prepare test reports.

1. Concrete test specimens shall be made in accordance with ASTM C31 and be tested in accordance with ASTM C39.

2. A minimum of three 6-by-12-inch test specimens shall be taken by the testing laboratory for every 50 cubic yards of concrete placed in each placement. At a minimum, 2 separate sets of test samples shall be taken during different placement times for the concrete. One test specimen of each set shall be tested at 7 days, and again at 14 days. The 14-day compressive strength shall be evaluated in accordance with ACI 214. The remaining test cylinder to be tested under the direction of the engineer, if required. If 28 day strength is achieved, the additional cylinder(s) may be discarded.

PART 4 - MEAUREMENT AND PAYMENT

4.1 CONCRETE

A. Measurement: No measurement for Concrete work of this Section will be made.

B. Payment: Payment for Concrete work of this Section will be made subsidiary to the lump sum (LS) amount for this project.

4.2 STEEL REINFORCEMENT

A. Measurement: No measurement for Reinforcement work of this Section will be made.

B. Payment: Payment for Reinforcement work of this Section will be made subsidiary to the lump sum (LS) amount for this project.

END OF SECTION 033000

SECTION 051000 – PRE-ENGINEERED METAL BUILDING

PART 1 - GENERAL

1.1 CUSTOMER DATA (Building Location)

Jefferson County Engineering Department
JCSO Hangar Building
Jack Brooks Regional Airport
N. Hwy 69 Nederland
Beaumont, TX 77705

1.2 PURPOSE OF DOCUMENT

This specification covers the minimum technical requirements for the design, engineering, materials, fabrication, and assembly of a pre-engineered metal building to serve as an airport hangar. The metal building system consists of integrated sets of mutually dependent components including framing, roof panels, wall panels, and accessories.

1.3 BUILDING DESCRIPTION

A. MBMA Intended Use

1. Building use classification: Standard building
2. Description of building use: Airport hangar

Size

3. Width: 60’
4. Length: 80’
5. Eave Height: 18’
6. Ridge Offset: 30’
7. Roof Pitch: 1:12

B. Frame Types

1. All (5) frame lines to have rigid frames (preferred over cold formed end walls)
   (a) End wall columns required for sheathing should be a hot-rolled ASTM shape.

C. Sheeting Requirements

1. West End Wall: This wall to be completely sheathed from ridge to top of concrete, with a 16’ W x 14’ H frame for a roll-up door with a centerline that is 13’ from the northwest corner.
2. East End Wall: Sheet down from ridge to 16’-6½” (verify with door manufacturer) above top of concrete, with frame for a 50’ W X 16’ H Hangar Door centered on the east end.
3. Side Walls: Sheet down from eave to top of concrete.

1.4 SYSTEM PERFORMANCE REQUIREMENTS

A. Structural Performance: Provide metal building systems capable of withstanding the effects of gravity loads and the following loads and stresses within limits and under conditions indicated:

1. Structure shall be designed to meet or exceed the wind loading criteria set forth in the IBC 2012 Edition as required by the Texas Department of Insurance's windstorm inspection program.
2. Design Loads: As required by ASCE 7, "Minimum Design Loads for Buildings and Other Structures", the 2009 International Building Code and the Metal Building Manufacturer's Association, Low Rise Building Systems Manual.
3. Dead Load: Metal Building Structure only as furnished by manufacturer.
4. Building Risk Category II
5. Live Load: 20 PSF (Reducible per code)
6. Wind Load: 140 MPH
   a. Importance Factor: 1.00
   b. Exposure: C
7. Ground Snow Load: 0 PSF
8. Collateral Load: 5 PSF

B. Seismic Performance: Design and engineer metal building systems capable of withstanding the effects of earthquake motions determined according to ASCE 7, "Minimum Design Loads for Buildings and Other Structures": Section 9, "Earthquake Loads."

C. Thermal Movements: Provide metal panel systems that allow for thermal movements resulting from the following maximum change (20 to 110 degrees) in ambient and surface temperatures by preventing buckling, opening of joints, overstressing of components, failure of joint sealants, failure of connections, and other detrimental effects. Base engineering calculation on surface temperatures of materials due to both solar heat gain and nighttime-sky heat loss.

D. Wind-Uplift Resistance: Provide metal roof panel assemblies that comply with UL 580 for Class 140 mph 3 second gust.

E. Louvers: Provide (2) 24" x 48" self-mulling, self-flashing, self-framing, fixed louver assemblies on the East end gable centered in wall. Louver assemblies to have an 18 gauge frame and 20 gauge blades.

F. Overhead Chain Hoist Beam: Provide steel beam capable of supporting 2-Ton capacity chain hoist and trolley as described in Section 2.8G. Beam to be located centerline of 16' roll-up door, (13') from north side wall, spanning between column lines 03 & 04 as shown on Sheet A7.01. Bottom of rail should be 15' above top of concrete. Provided rail shall have minimum height of 8" and flange width between 3.23" and 6.02".

1.5 SUBMITTALS

A. Shop Drawings: Include plans, elevations, sections, details, and attachments to other work.

1. For installed products indicated to comply with design loads, include structural analysis data signed and sealed by the qualified professional engineer responsible for their preparation.

2. Anchor-Bolt Plans: Submit anchor-bolt plans before foundation work begins. Include location, diameter, and projection of anchor bolts required to attach metal building to foundation. Indicate column reactions at each location.
3. Structural-Framing Drawings: Show complete fabrication of primary and secondary framing; include provisions for openings. Indicate welds and bolted connections, distinguishing between shop and field applications. Include transverse cross-sections.
4. Metal Roof and Wall Panel Layout Drawings: Show layouts of metal panels including methods of support. Include details of edge conditions, joints, panel profiles, corners, anchorages, trim, flashings, closures, and special details. Distinguish between factory- and field-assembled work; show locations of exposed fasteners.
5. Overhead Chain Hoist: Provide submittals of electrical chain hoist and push trolley as described in Section 2.8G

B. Letter of Design Certification: Signed and sealed by a qualified professional engineer. Include the following:

1. Name and location of Project.
2. Order number.
3. Name of manufacturer.
4. Building dimensions including width, length, height, and roof slope.
5. Indicate compliance with AISC standards for hot-rolled steel and AISI standards for cold-rolled steel, including edition dates of each standard.
6. Governing building code and year of edition.
7. Design loads and load combinations.
8. Building-use category.

1.6 QUALITY ASSURANCE

A. Manufacturer Qualifications: A qualified manufacturer**.**
1. Engineering Responsibility: Preparation of Shop Drawings and comprehensive engineering analysis by a qualified professional engineer.

B. Welding: Qualify procedures and personnel according to AWS D1.1, "Structural Welding Code--Steel," and AWS D1.3, "Structural Welding Code--Sheet Steel."

C. Structural Steel: Comply with AISC's "Specification for Structural Steel Buildings--Allowable Stress Design, Plastic Design," or AISC's "Load and Resistance Factor Design Specification for Structural Steel Buildings," for design requirements and allowable stresses.

D. Cold-Formed Steel: Comply with AISI's "Specification for the Design of Cold-Formed Steel Structural Members," or AISI's "Load and Resistance Factor Design Specification for Steel Structural Members," for design requirements and allowable stresses.

1.7 DELIVERY, STORAGE, AND HANDLING

A. Stack metal panels horizontally on platforms or pallets, covered with suitable weathertight and ventilated covering. Store metal panels to ensure dryness and with positive slope for drainage of water. Do not store metal panels in contact with other materials that might cause staining, denting, or other surface damage.

1.8 WARRANTY

A. Special Warranty on Metal Panel Finishes: Manufacturer's standard form in which manufacturer agrees to repair finish or replace metal panels that show evidence of deterioration of factory-applied finishes within specified warranty period.

1. Galvalume Finish: Deterioration includes, but is not limited to, the following:

a. Corrosion
b. Rupture
c. Fail structurally
d. Perforate

2. Finish Warranty Period: 20 years from date of Substantial Completion.

PART 2 - PRODUCTS

2.1 MANUFACTURERS

A. Available Manufacturers: Subject to compliance with requirements, manufacturers offering products that may be incorporated into the Work include, but are not limited to, the following:

B. Manufacturers: Subject to compliance with requirements, provide products by one of the following:
1. United Steel Structures, Inc.
2. Mueller, Inc.
3. SISCORP
4. Whirlwind Steel
5. Ludwig Building Enterprises, LLC
6. Red Dot Building Systems
7. ACI Building Systems
8. Nucor
9. Shulte Building Systems
10. Engineer-Approved Equal

2.2 STRUCTURAL-FRAMING MATERIALS

A. W-Shapes: ASTM A 992, Grade 50

B. Channels, Angles, M-Shapes, and S-Shapes: ASTM A 36

C. Plate and Bar: ASTM A 36

D. Steel Pipe: Schedule 40, ASTM A 53, Type E or S, Grade B.

E. Cold-Formed Hollow Structural Sections: ASTM A 570, Grade 55

F. Steel Sheet Panels: ASTM A653 , Grade 80, or ASTM A446, Grade E, minimum yield strength of 80 ksi.

1. Finish: Galvanized coating conforming to ASTM A525.

G. Insert joist girders instead of built-up steel plates or structural-steel shapes if required for primary structural framing. Insert open-web steel joists instead of cold-formed steel sheet if required for rafters or purlins.

H. Non-High-Strength Bolts, Nuts, and Washers: ASTM A 307, Grade A , carbon-steel, hex-head bolts; ASTM A 563 carbon-steel hex nuts; and ASTM F 844 plain (flat) steel washers.

1. Finish: Hot-dip zinc coating, ASTM A 153, Class C.

I. High-Strength Bolts, Nuts, and Washers: ASTM A 325, Type 1, heavy hex steel structural bolts; ASTM A 563 heavy hex carbon-steel nuts; and ASTM F 436 hardened carbon-steel washers.

1. Finish: Hot-dip zinc coating, ASTM A 153, Class C.
2. Tension-Control, High-Strength Bolt-Nut-Washer Assemblies: ASTM F 1852, Type 1, heavy-hex-head steel structural bolts with splined ends.

a. Finish: Mechanically deposited zinc coating, ASTM B 695, Class 50.

J. High-Strength Bolts, Nuts, and Washers: ASTM A 490, Type 1, heavy hex steel structural bolts; ASTM A 563 heavy hex carbon-steel nuts; and ASTM F 436 hardened carbon-steel washers, plain.

K. Unheaded Anchor Rods: ASTM F 1554, Grade 36 Grade 50

1. Configuration: Straight.
2. Nuts: ASTM A 563 heavy hex carbon steel.
3. Plate Washers: ASTM A 36 carbon steel.
4. Washers: ASTM F 436 hardened carbon steel.
5. Finish: Hot-dip zinc coating, ASTM A 153, Class C.

L. Headed Anchor Rods: ASTM F 1554, Grade 36, straight.

1. Nuts: ASTM A 563 heavy hex carbon steel.
2. Plate Washers: ASTM A 36 carbon steel.
3. Washers: ASTM F 436 hardened carbon steel.
4. Finish: Hot-dip zinc coating, ASTM A 153, Class C.

M. Threaded Rods: ASTM A 572, Grade 50.

1. Nuts: ASTM A 563 heavy hex carbon steel.
2. Washers: ASTM F 436 hardened carbon steel.
3. Finish: Hot-dip zinc coating, ASTM A 153, Class C.

2.3 MISCELLANEOUS MATERIALS

A. Fasteners: Self-tapping screws, bolts, nuts, self-locking rivets and bolts, end-welded studs, and other suitable fasteners designed to withstand design loads. Provide fasteners with heads matching color of materials being fastened by means of plastic caps or factory-applied coating.

1. Fasteners for Metal Roof Panels: Self-drilling or self-tapping, zinc-plated, hex-head carbon-steel screws, with a stainless-steel cap or zinc-aluminum-alloy head and EPDM or neoprene sealing washer.
2. Fasteners for Metal Wall Panels: Self-drilling or self-tapping, zinc-plated, hex-head carbon-steel screws, with nylon or polypropylene washer.
3. Fasteners for Metal Roof and Wall Panels: Self-drilling Type 410 stainless-steel or self-tapping Type 304 stainless-steel or zinc-alloy-steel hex washer head, with EPDM or PVC washer under heads of fasteners bearing on weather side of metal panels.

B. Metal Panel Sealants:

1. Sealant Tape: Pressure-sensitive, 100 percent solids, gray polyisobutylene compound sealant tape with release-paper backing.
2. Joint Sealant: ASTM C 920; one-part elastomeric polyurethane, polysulfide, or silicone-rubber sealant.

2.4 FABRICATION, GENERAL

A. Tolerances: Comply with MBMA's "Metal Building Systems Manual": Chapter IV, Section 9, "Fabrication and Erection Tolerances."

B. Metal Panels: Provide panel profile, including major ribs and intermediate stiffening ribs, if any, for full length of metal panel.

2.5 STRUCTURAL FRAMING

A. General:

1. Primary Framing: Shop fabricate framing components to indicated size and section with baseplates, bearing plates, stiffeners, and other items required for erection welded into place. Cut, form, punch, drill, and weld framing for bolted field assembly.

   a. Make shop connections by welding or by using high-strength bolts.
   b. Join flanges to webs of built-up members by a continuous submerged arc-welding process.
   c. Brace compression flange of primary framing with steel angles or cold-formed structural tubing between frame web and purlin or girt web, so flange compressive strength is within allowable limits for any combination of loadings.
   d. Shop Coating: Prepare surfaces for shop priming according to SSPC-SP 2. Shop coat primary structural members with red-oxide primed hot dipped galvanizing after fabrication.

2. Secondary Framing: Shop fabricate framing components to indicated size and section by roll-forming or break-forming, with baseplates, bearing plates, stiffeners, and other plates required for erection welded into place. Cut, form, punch, drill, and weld secondary framing for bolted field connections to primary framing.

   a. Shop Coating: Prepare uncoated surfaces for shop coating according to SSPC-SP 2. Shop coat secondary structural members with red-oxide primed after fabrication.

B. Primary Framing: Manufacturer's standard structural primary framing system, designed to withstand required loads and specified requirements. Primary framing includes transverse and lean-to frames; rafter, rake, and canopy beams; sidewall, intermediate, end-wall, and corner columns; and wind bracing. Provide frames with attachment plates, bearing plates, and splice members. Factory drill for field-bolted assembly. Provide frame span and spacing indicated.

1. Rigid Clear-Span Frames: I-shaped frame sections fabricated from shop-welded, built-up steel plates or structural-steel shapes. Interior columns are not permitted.
2. Rigid Modular Frames: I-shaped frame sections fabricated from shop-welded, built-up steel plates or structural-steel shapes. Provide interior columns fabricated from round structural steel I shapes, steel pipe or tube, or shop-welded, built-up steel plates as required.
3. Frame Configuration: Single gable.
4. Exterior Column Type: Uniform depth or Tapered.
5. Rafter Type: Uniform depth or Tapered.

C. Secondary Framing: Manufacturer's standard secondary framing members, including purlins, girts, eave struts, flange bracing, base members, gable angles, clips, headers, jambs, and other miscellaneous structural members. Fabricate framing from cold-formed, structural-steel sheet or roll-formed, hot dipped galvanized steel sheet, unless otherwise indicated, to comply with the following:

1. Purlins: C- or Z-shaped sections; fabricated from minimum 0.0598-inch- thick steel sheet, built-up steel plates, or structural-steel shapes; minimum 2-1/2-inch- wide flanges.

   a. Depth: As required to comply with system performance requirements.

2. Girts: C- or Z-shaped sections; fabricated from minimum 0.0598-inch- thick steel sheet, built-up steel plates, or structural-steel shapes. Form ends of Z-sections with stiffening lips angled 40 to 50 degrees to flange and with minimum 2-1/2-inch- wide flanges.

   a. Depth: As required to comply with system performance requirements.

3. Eave Struts: Unequal-flange, C-shaped sections; fabricated from 0.0598-inch- thick steel sheet, built-up steel plates, or structural-steel shapes; to provide adequate backup for metal panels.
4. Flange Bracing: Minimum 2-by-2-by-1/8-inch structural-steel angles or 1-inch diameter, cold-formed structural tubing to stiffen primary frame flanges.
5. Sag Bracing: Minimum 1-by-1-by-1/8-inch structural-steel angles.
6. Base or Sill Angles: Minimum 3-by-2-by-0.0598-inch zinc-coated steel sheet.
7. Purlin and Girt Clips: Minimum 0.0598-inch- thick, steel sheet. Provide galvanized clips where clips are connected to galvanized framing members.
8. Secondary End-Wall Framing: Manufacturer's standard sections fabricated from minimum 0.0598-inch- thick, zinc-coated steel sheet.
9. Framing for Openings: Channel shapes; fabricated from minimum 0.0598-inch- thick, cold-formed, structural-steel sheet or structural-steel shapes. Frame head and jamb of door openings, and head, jamb, and sill of other openings.
10. Miscellaneous Structural Members: Manufacturer's standard sections fabricated from cold-formed, structural-steel sheet; built-up steel plates; or zinc-coated steel sheet; designed to withstand required loads.

D. Bracing: Provide adjustable wind bracing as follows:

1. Rods: ASTM A 36; ASTM A 572, Grade 50 ; or ASTM A 529, Grade 50; minimum 1/2-inch diameter steel; threaded full length or threaded a minimum of 6 inches at each end.
2. Cable: ASTM A 475, 1/4-inch diameter, extra-high-strength grade, Class B zinc-coated, 7-strand steel; with threaded end anchors.
3. Angles: Fabricated from structural-steel shapes to match primary framing, of size required to withstand design loads.
4. Rigid Portal Frames: Fabricate from shop-welded, built-up steel plates or structural-steel shapes to match primary framing; of size required to withstand design loads.
5. Fixed-Base Columns: Fabricate from shop-welded, built-up steel plates or structural-steel shapes to match primary framing; of size required to withstand design loads.
6. Diaphragm Action of Metal Panels: Design metal building to resist wind forces through diaphragm action of metal panels.
7. Bracing: Provide wind bracing using any method specified above, at manufacturer's option.

E. Bolts: Provide hot-dipped galvanized bolts for structural-framing components that are galvanized.

2.6 METAL ROOF PANELS

A. Tapered-Rib-Profile, Lap-Seam Metal Roof Panels: Formed with raised, trapezoidal major ribs and intermediate stiffening ribs symmetrically spaced between major ribs; designed to be field assembled by lapping side edges of adjacent panels and mechanically attaching panels to supports using exposed fasteners in side laps.

1. Material: Zinc-coated (galvanized) steel sheet, 24 gauge (0.0179” thick).

   a. Exterior Finish: Galvalume

2. Major-Rib Spacing: 12 inches o.c.
3. Panel Coverage: 36 inches.
4. Panel Height: 1 ¼” inches.

2.7 FIELD-ASSEMBLED METAL WALL PANELS

A. Tapered-Rib-Profile, Exposed-Fastener Metal Wall Panels: Formed with raised, trapezoidal major ribs and intermediate stiffening ribs symmetrically spaced between major ribs; designed to be field assembled by lapping side edges of adjacent panels and mechanically attaching panels to supports using exposed fasteners in side laps.

1. Material: Zinc-coated (galvanized) steel sheet, 26 gauge (0.0179” thick).
   a. Exterior Finish: Tan Walls with Brown Trim (to match adjacent tan hangar as close as possible)

2. Major-Rib Spacing: 12 inches o.c.
3. Panel Coverage: 36 inches.
4. Panel Height: 1 ¼”.

2.8 ACCESSORIES

A. General: Provide accessories as standard with metal building system manufacturer and as specified. Fabricate and finish accessories at the factory to greatest extent possible, by manufacturer's standard procedures and processes. Comply with indicated profiles and with dimensional and structural requirements.

B. Roof Panel Accessories: Provide components required for a complete metal roof panel assembly including copings, fasciae, corner units, ridge closures, clips, sealants, gaskets, fillers, closure strips, and similar items. Match material and finish of metal roof panels, unless otherwise indicated.

1. Closures: Provide closures at eaves and ridges, fabricated of same material as metal roof panels.
2. Clips: Manufacturer's standard, formed from stainless-steel sheet, designed to withstand negative-load requirements.
3. Cleats: Manufacturer's standard, mechanically seamed cleats formed from stainless-steel sheet.
4. Backing Plates: Provide metal backing plates at panel end splices, fabricated from material recommended by manufacturer.
5. Closure Strips: Closed-cell, expanded, cellular, rubber or crosslinked, polyolefin-foam or closed-cell laminated polyethylene; minimum 1-inch- thick, flexible closure strips; cut or premolded to match metal roof panel profile. Provide closure strips where indicated or necessary to ensure weathertight construction.

C. Wall Panel Accessories: Provide components required for a complete metal wall panel assembly including copings, fasciae, mullions, sills, corner units, clips, sealants, gaskets, fillers, closure strips, and similar items. Match material and finish of metal wall panels, unless otherwise indicated.

1. Closures: Provide closures at eaves and rakes, fabricated of same material as metal wall panels.
2. Closure Strips: Closed-cell, expanded, cellular, rubber or crosslinked, polyolefin-foam or closed-cell laminated polyethylene; minimum 1-inch- thick, flexible closure strips; cut or premolded to match metal wall panel profile. Provide closure strips where indicated or necessary to ensure weathertight construction.

D. Flashing and Trim: Formed from minimum 0.0159-inch- thick, galvanized steel sheet; finished to match adjacent metal panels.

1. Opening Trim: Minimum 0.0269-inch- thick, metallic-coated steel sheet or aluminum-zinc alloy-coated steel sheet prepainted with coil coating. Trim head and jamb of door openings, and head, jamb, and sill of other openings.

E. Gutters: Formed from minimum 0.0159-inch- thick, metallic-coated steel sheet or aluminum-zinc alloy-coated steel sheet prepainted with coil coating; finished to match roof fascia and rake trim. Match profile of gable trim, complete with end pieces, outlet tubes, and other special pieces as required. Fabricate in minimum 96-inch- long sections, sized according to SMACNA's "Architectural Sheet Metal Manual."

1. Gutter Supports: Fabricated from same material and finish as gutters; spaced 36 inches o.c.

F. Downspouts: Formed from 0.0159-inch- thick, zinc-coated (galvanized) steel sheet or aluminum-zinc alloy-coated steel sheet prepainted with coil coating; finished to match metal wall panels. Fabricate in minimum 10-foot- long sections, complete with formed elbows and offsets.

1. Mounting Straps: Fabricated from same material and finish as gutters; spaced 10 feet o.c.

G. Overhead Chain Hoist: One (1) single speed electric chain hoist with push trolley – capacity of 2 tons. Hoist to have 15’ lift capacity.

1. Harrington product code – SNERPOZOL-15 or engineer-approved equal. Electrical requirement of 12 amps @ 230V.

H. Insulation: Provide 3” thick VRR fiberglass insulation on walls and roof of metal building. Install as per manufacturers recommended installation procedure.

I. Canopy: Provide 4’x4’ rod hung canopy centered over personnel walk door. Canopy to designed and provided by the pre-engineered metal building vendor and must meet the structural performance criteria set forth in section 1.4 of this specification.

END OF SECTION 051000

JEFFERSON COUNTY ENGINEERING DEPARTMENT
JCSO HANGAR BUILDING

SECTION 055000 - METAL FABRICATIONS

PART 1 - GENERAL

1.1 SUMMARY

A. This Section includes the following:

1. Steel weld plates and angles.

1.2 SUBMITTALS

A. Product Data for the following:

1. Grout.

B. Shop Drawings: Include plans, elevations, sections, and details of metal fabrications and their connections. Show anchorage and accessory items.

C. Templates: For anchors and bolts.

PART 2 - PRODUCTS

2.1 MANUFACTURERS

A. Available Products: Subject to compliance with requirements, products that may be incorporated into the Work include, but are not limited to, products specified.

B. Available Manufacturers: Subject to compliance with requirements, manufacturers offering products that may be incorporated into the Work include, but are not limited to, manufacturers specified.

2.2 METALS

A. Metal Surfaces, General: Provide materials with smooth, flat surfaces without blemishes.

B. Ferrous Metals:

1. Steel Plates, Shapes, and Bars: ASTM A 36/A 36M.

2.3 FASTENERS

A. General: Type 316 stainless-steel fasteners for exterior use at exterior walls. Use zinc-plated fasteners with coating complying with ASTM B 633, Class Fe/Zn 5, in all other exterior applications unless noted otherwise. Provide stainless-steel fasteners for fastening aluminum. Select fasteners for type, grade, and class required.

B. Cast-in-Place Anchors in Concrete: ASTM F1554, Grade 36, threaded and nutted.

C. Common Bolts: ASTM A307, hot-dip galvanized in accordance with ASTM B 633. Utilize common bolts in connections with timber piles, engineered beam floor framing system, and as indicated in the construction drawings.

2.4 MISCELLANEOUS MATERIALS

A. Galvanizing Repair Paint: SSPC-Paint 20, high-zinc-dust-content paint for regalvanizing welds in steel.

B. Nonshrink, Nonmetallic Grout: Factory-packaged, nonstaining, noncorrosive, nongaseous grout complying with ASTM C 1107.

C. Concrete Materials and Properties: Comply with requirements in Division 03 Section "Cast-in-Place Concrete" for normal-weight, air-entrained, ready-mix concrete with a minimum 28-day compressive strength of 4000 psi, unless otherwise indicated.

2.5 FABRICATION

A. General: Preassemble items in the shop to greatest extent possible. Use connections that maintain structural value of joined pieces.

1. Cut, drill, and punch metals cleanly and accurately. Remove burrs and ease edges. Remove sharp or rough areas on exposed surfaces.
2. Weld corners and seams continuously. Use materials and methods that minimize distortion and develop strength and corrosion resistance of base metals. Obtain fusion without undercut or overlap. Remove welding flux immediately. Finish exposed welds smooth and blended.
3. Form exposed connections with hairline joints, flush and smooth, using concealed fasteners where possible. Locate joints where least conspicuous.
4. Fabricate seams and other connections that will be exposed to weather in a manner to exclude water. Provide weep holes where water may accumulate.
5. Where units are indicated to be cast into concrete or built into masonry, equip with integrally welded steel strap anchors, not less than 24 inches o.c.

B. Loose Bearing and Leveling Plates: Provide loose bearing and leveling plates for steel items bearing on masonry or concrete construction. Drill plates to receive anchor bolts.

2.6 FINISHES

A. Comply with NAAMM's "Metal Finishes Manual for Architectural and Metal Products" for recommendations for applying and designating finishes. Finish metal fabrications after assembly.

B. Steel and Iron Finishes:

1. Hot-dip galvanize items as indicated to comply with ASTM A 123/A 123M or ASTM A 153/A 153M as applicable.

PART 3 - EXECUTION

3.1 INSTALLATION

A. General: Perform cutting, drilling, and fitting required for installing metal fabrications. Set metal fabrications accurately in location, with edges and surfaces level, plumb, and true.

1. Fit exposed connections accurately together. Weld connections that are not to be left as exposed joints but cannot be shop welded. Do not weld, cut, or abrade surfaces of exterior units that have been hot-dip galvanized after fabrication.
2. Provide anchorage devices and fasteners where metal fabrications are required to be fastened to in-place construction.
3. Provide temporary bracing or anchors in formwork for items that are to be built into concrete, masonry, or similar construction.

B. Set bearing and leveling plates on cleaned surfaces using wedges, shims, or leveling nuts. After bearing members have been positioned and plumbed, tighten anchor bolts and pack solidly with nonshrink, nonmetallic grout.

C. Touch up surfaces and finishes after erection.
1. Galvanized Surfaces: Clean field welds, bolted connections, and abraded areas and repair galvanizing to comply with ASTM A 780.

PART 4 - MEASUREMENT AND PAYMENT

4.1 FABRICATION

A. Measurement: No measurement for Fabrication work of this Section will be made.

B. Payment: Payment for Fabrication work of this Section will be made subsidiary to the lump sum (LS) amount for this project.

END OF SECTION 055000

JEFFERSON COUNTY ENGINEERING DEPARTMENT
JCSO HANGAR BUILDING

SECTION 055001 – ANCHOR ROD ASSEMBLIES

PART 1 - GENERAL

1.1 SUMMARY

A. This Section specifies all thread bar anchor rods and terminal assemblies as shown on the plans.

B. The contractor shall furnish and install all thread bar anchor rods and terminal assemblies as shown on the plans to meet the requirements of ASTM A615.

1.2 SUBMITTALS

A. Shop Drawings: Include plans, elevations, sections, and details of metal fabrications and their connections. Show anchor rod assemblies covering material, terminal assembly details, coating specifications and procedures, and duct material and installation.

PART 2 - PRODUCTS

2.1 MATERIALS

A. Provide all materials for assemblies as required by drawings, listed below:

1. Threaded bar meeting the requirements of ASTM A615.
2. Heavy hex nuts
3. Bearing plates
4. Couplings
5. Other appurtenances as required to affect the installation described in the plans.

All nuts, couplers, and other appurtenance shall be capable of developing a minimum of 95% of the ultimate tensile strength of the base rod.

2.2 FINISHES

A. Rods shall be blast cleaned to SSPC-SP 10 and coated with coal tar epoxy paint suitable for use on structural steel. Paint supplied shall meet or exceed the requirements of (a) Paint Specification No. 16, Type 1, Class II, of the Steel Structures Painting Council (b) Corps of Engineers C-200, C200a and (c) AWWA C-210-92. Final coating thickness to be minimum 10 mils. This system is used for painting new steel.

B. For those bar manufacturers that offer a factory coating option, the manufacturer's recommended preparation and epoxy coating systems may be substituted with

engineer's approval. Other items required for completion of the assemblies shall be hot-dip galvanized in accordance with Division 05 Section "Metal Fabrications."

PART 3 - EXECUTION

3.1 INSTALLATION

A. Rods shall be installed to the lines and grades shown in the plans.

B. Nuts on terminal assemblies shall be tightened to snug tight, and there shall be a minimum of 2 (two) nut lengths of exposed bar between the terminal nut and the bar end.

C. Bars shall be supported in such a way as to allow backfill without causing sag or deflection in the bars.

D. Coating damage shall be repaired in using the same materials and processes as defined in Article 2.2A "Finishes" prior to backfilling operations.

PART 4 - MEASUREMENT AND PAYMENT

4.1 ANCHOR ROD ASSEMBLIES

A. Measurement: No measurement for Anchor Rod Assembly work of this Section will be made.

B. Payment: Payment for Anchor Rod Assembly work of this Section will be made subsidiary to the lump sum (LS) amount for this project.

END OF SECTION 055001

JEFFERSON COUNTY ENGINEERING DEPARTMENT
JCSO HANGAR BUILDING

SECTION 061100 - WOOD FRAMING

PART 1 – GENERAL

1.1 SECTION INCLUDES

A. Structural floor, wall, and roof framing.
B. Floor sheathing.
C. Preservative treatment of wood.
D. Miscellaneous framing and sheathing.
E. Concealed wood blocking for support of toilet and bath accessories.

1.2 REFERENCES

A. AHA (American Hardboard Association) A135.4 - Basic Hardboard.
B. ALSC (American Lumber Standards Committee) - Softwood Lumber Standards.
C. ANSI A208.1 - Mat-Formed Wood Particleboard.
D. APA (American Plywood Association).
E. AWPA (American Wood Preservers Association) C1 - All Timber Products - Preservative Treatment by Pressure Process.
F. AWPA (American Wood Preservers Association) C20 - Structural Lumber Fire Retardant Treatment by Pressure Process.
G. NFPA (National Forest Products Association).
H. RIS (Redwood Inspection Service).
I. SPIB (Southern Pine Inspection Bureau).
J. WCLIB (West Coast Lumber Inspection Bureau).
K. WWPA (Western Wood Products Association).

1.3 SUBMITTALS FOR REVIEW

A. Division One - Submittals: Procedures for submittals.
B. Product Data: Provide technical data on insulated sheathing, wood preservative materials, and application instructions.
C. Shop Drawings For Site Fabricated Truss Frame: Indicate dimensions, wood species and grades, component profiles, drilled holes, fasteners, connectors, erection details and sequence.
D. Samples of Exposed To View Wood Members: Submit two samples, 12 inches of running length illustrating wood grain, stain, and finish.

1.4 SUBMITTALS FOR INFORMATION

A. Division One - Submittals: Procedures for submittals.

B. Manufacturer's Certificate: Certify that Products conform to specified requirements.

1.5 QUALITY ASSURANCE

A. Perform Work in accordance with the following agencies:

1. Lumber Grading Agency: Certified by ALSC.

2. Plywood Grading Agency: Certified by APA.

B. In lieu of grade stamping exposed to view lumber and plywood, submit manufacturer's certificate certifying that products meet or exceed specified requirements.

1.6 DELIVERY, STORAGE, AND PROTECTION

A. Division One - Material and Equipment: Transport, handle, store, and protect products.

B. Protect trusses from warping or other distortion by stacking in vertical position, braced to resist movement.

PART 2 – PRODUCTS

2.1 LUMBER MATERIALS

A. Lumber Grading Rules: SPIB, WWPA.

B. Beam Framing: YP species, 2 or better grade, 19 percent maximum moisture content.

C. Joist Framing: YP species, 2 or better grade, 19 percent maximum moisture content.

D. Non-structural Light Framing: YP or HemFir species, 2 or better grade, 19 percent maximum moisture content.

E. Studding: YP or HemFir species, 2 or better grade, 19 percent maximum moisture content.

2.2 SHEATHING MATERIALS

A. Plywood Decking/ Sheathing: APA Rated Sheathing, Structural II; Exposure Durability 2; sanded.

2.3 SHEATHING AND UNDERLAYMENT LOCATIONS

A. Floor Sheathing: 3/4 inch thick, 48 x 96 inch sized sheets, square edges.

2.4 ACCESSORIES

A. Fasteners and Anchors:

1. Fasteners: Electro galvanized steel for high humidity and treated wood locations, unfinished steel elsewhere.
2. Drywall Screws: Bugle head, hardened steel, power driven type, length three times thickness of sheathing.

2.5 FACTORY WOOD TREATMENT

A. Wood Preservative (Pressure Treatment): AWPA Treatment C1 using water borne preservative with 0.25 percent retainage.

PART 3 – EXECUTION

3.1 FRAMING

A. Set structural members level and plumb, in correct position.

B. Make provisions for erection loads, and for sufficient temporary bracing to maintain structure safe, plumb, and in true alignment until completion of erection and installation of permanent bracing.

C. Place horizontal members, crown side up.

D. Construct load bearing framing members full length without splices.

E. Double members at openings over 24 inches wide. Space short studs over and under opening to stud spacing.

F. Construct double joist headers at floor and ceiling openings and under wall stud partitions that are parallel to floor joists. Frame rigidly into joists.

G. Bridge joists or framing in excess of 8 feet span at mid-span. Fit solid blocking, bridging, or header joists at ends of members.

H. Place full width continuous sill flashings under framed walls on cementitious foundations.

Lap flashing joint 4 inches.

I. Coordinate installation of wood decking.

3.2 SHEATHING

A. Secure roof sheathing with longer edge perpendicular to framing members and with ends staggered and sheet ends over bearing.

3.3 TOLERANCES

A. Framing Members: 1/4 inch from true position, maximum.

B. Surface Flatness of Floor: 1/4 inch in 10 feet maximum, and ½ inch in 30 feet maximum.

END OF SECTION 061100

JEFFERSON COUNTY ENGINEERING DEPARTMENT
JCSO HANGAR BUILDING

SECTION 066400 - FIBERGLASS-REINFORCED PLASTIC PANELS

PART 1 – GENERAL

1.1 SUMMARY

A. Provide fiberglass reinforced plastic (FRP) panels for wall [and ceiling] applications.

B. Related Sections: Coordinate with Work of other sections including the following:

a. Section 092900 – Gypsum Board.

1.2 SUBMITTALS

A. Product Data: Submit manufacturer's literature including product characteristics, accessories and limitations.

B. Selection Samples: Submit samples of colors and finishes if requested by Architect.

C. Verification Samples: Submit samples of materials selected specified to verify color and finish.

D. Industry Certifications and Standards: Submit copy of documentation indicating compliance.

1.3 QUALITY ASSURANCE

A. Manufacturer: Minimum of 5 years experience manufacturing similar products.

1.4 DELIVERY, STORAGE AND HANDLING

A. Deliver materials and products in unopened factory labeled packages. Store and handle in strict compliance with manufacturer's instructions and recommendations.

1.5 WARRANTY

A. Manufacturer's Warranty: Provide manufacturer's standard warranty against defects in manufacturing.

PART 2 – PRODUCTS

2.1 FIBERGLASS-REINFORCED PLASTIC PANELS

A. Manufacturers:

1. Panolam Industries International, Inc.
2. Stabilit
3. Or Equal

B. Properties:

1. Color: White.
2. Surface Texture: Embossed.
3. Fire Rating ASTM E 84: Class C.

5. IMO Certified available for marine use.
6. Thickness: 0.090 inches.
7. Accessories: Color matched dividers, outside corners, inside corners, end caps and fastening rivets.
8. Adhesive: As recommended by manufacturer.

PART 3 – EXECUTION

3.1 EXAMINATION

A. Examine substrates for compliance with requirements for installation tolerances and other conditions affecting performance. Proceed with installation only after unsatisfactory conditions have been corrected.

3.2 INSTALLATION

A. Install products in strict accordance with manufacturer's instructions and approved submittals.
   1. Clean substrate of dirt, dust, waxes, and other bond breaking substances prior to beginning installation.
   2. Install panels with bottom edge located to clear top of resilient base.
   3. Apply adhesive uniformly using adhesive manufacturers recommended trowel to the entire back of panels completely to the edge (100% coverage).
   4. Lay FRP panels in place leaving approximately 1/8 inch between panels and 1/4 inch space top and bottom.
   5. Follow adhesive manufacturer's recommendations for set and application times.
   6. Apply pressure to entire panel face with laminate type roller, removing trapped air and ensure proper adhesion between surfaces.

3.3 ADJUSTING AND CLEANING

A. Replace installations out of plumb and not aligned with adjacent panels and construction.
B. Clean panel face to remove soiling, stains, dust, and dirt using clean rags, and cleaning agents as instructed by manufacturer.
C. Leave installation clean, free of residue and debris resulting from work of this Section.

END OF SECTION 066400

SECTION 072113 - BATT INSULATION

PART 1 - GENERAL

1.1 SECTION INCLUDES

A. Batt insulation and vapor retarder in exterior wall and ceiling construction.

1.2 REFERENCES

A. ASTM C665 - Mineral Fiber Blanket Thermal Insulation for Light Frame Construction and Manufactured Housing.
B. ASTM E84 - Test Method for Surface Burning Characteristics of Building Materials.
C. NFPA 255 - Test of Surface Burning Characteristics of Building Materials.
D. UL 723 - Tests for Surface Burning Characteristics of Building Materials.

1.3 SYSTEM DESCRIPTION

A. Materials of This Section: Provide continuity of thermal barrier at building enclosure elements.

A.4.1 SUBMITTALS

A. Submit under provisions of Section 013300 - Submittals.
B. Product Data: Provide data on product characteristics, performance criteria, limitations.
C. Manufacturer's Certificate: Certify that products meet or exceed specified requirements.

1.5 COORDINATION

A. Coordinate work under provisions of Section 013113 - Coordination and Meetings.

PART 2 - PRODUCTS

2.1 MATERIALS

A. Batt Insulation: ASTM C665; preformed glass fiber batt; conforming to the following:
    1. Thermal Resistance: Refer drawings.
    2. Batt Size: Width to match stud spacing.
    3. Facing: Foil faced for ceiling area, paper for wall area.
    4. Flame/Smoke Properties: 25/450 in accordance with ASTM E84.
B. Tape: Bright aluminum self-adhering type, mesh reinforced, 2 inch wide.
C. Insulation Fasteners: Steel impale spindle and clip on flat metal base, self adhering backing, length to suit insulation thickness, capable of securely and rigidly fastening insulation in place; as recommended by insulation manufacturer.
D. Wire Mesh: Galvanized steel, hexagonal wire mesh.

PART 3 EXECUTION

3.1 EXAMINATION

A. Verify that substrate, adjacent materials, and insulation are dry and ready to receive insulation

3.2 INSTALLATION

A. Install insulation and vapor retarder in accordance with insulation manufacturer's instructions.
B. Install in exterior walls, roof, and ceiling spaces without gaps or voids. Do not compress insulation.
C. Trim insulation neatly to fit spaces. Insulate miscellaneous gaps and voids.
D. Fit insulation tight in spaces and tight to exterior side of mechanical and electrical services within the plane of insulation.
E. Install with factory applied vapor retarder membrane facing warm side of building spaces. Lap ends and side flanges of membrane between framing members.
F. Friction fit batts between studs. Staple or nail facing flanges in place at maximum 6 inches oc. Tape in place.
G. Tape seal butt ends, lapped flanges, and tears or cuts in membrane.
H. Wood Framing: Place vapor retarder on warm side of insulation by stapling at 6inches oc.
   Lap and seal sheet retarder joints over member face.
I. Tape seal tears or cuts in vapor retarder.
J. Extend vapor retarder tight to full perimeter of adjacent window and door frames and other items interrupting the plane of membrane. Tape seal in place.

END OF SECTION 072113

SECTION 081100 - STANDARD STEEL DOORS AND FRAMES

PART 1 - GENERAL

1.1 SECTION INCLUDES

A. Non-rated and fire rated thermally insulated steel doors and panels.

1.2 REFERENCES

A. Americans with Disabilities Act.
B. State of Texas Handicap Accessibility Standards.
C. ANSI A117.1 - Specifications for Making Buildings and Facilities Accessible to and Usable by Physically Handicapped People.
D. ANSI/SDI-100 - Standard Steel Doors and Frames.
E. ASTM A525 - Steel Sheet, Zinc-Coated (Galvanized) by the Hot-Dip Process.
F. ASTM E413 - Classification for Determination of Sound Transmission Class.
G. Door Hardware Institute (DHI) - The Installation of Commercial Steel Doors and Steel Frames, Insulated Steel Doors in Wood Frames and Builder's Hardware.

1.3 DESIGN / PERFORMANCE REQUIREMENTS (EXTERIOR WALK DOOR ONLY)

A. Wind Loads: Design door assembly to withstand wind/suction load without damage to door or assembly components.
   1. Design Wind Load: 140 MPH - 3 Second Burst.
B. Operation: Design door assembly, including operator, to operate for not less than 20,000 cycles.

1.4 SUBMITTALS

A. Shop Drawings: Indicate door elevations, internal reinforcement, closure method, and cut-outs for glazing and louvers and finish.
B. Product Data: Indicate door configurations, location of cut-outs for hardware reinforcement.
C. Manufacturer's Installation Instructions: Indicate special installation instructions.
D. Manufacturer's Certificate: Certify that Products meet or exceed specified requirements.

1.5 QUALITY ASSURANCE

A. Conform to requirements of ADA, ANSI/SDI-100 and ANSI A117.1.

1.6 QUALIFICATIONS

A. Manufacturer: Company specializing in manufacturing the Products specified in this section with minimum three years documented experience.

1.7 DELIVERY, STORAGE, AND HANDLING

A. Deliver, store, protect, and handle products to site under provisions of Section 01 65 00 -Material and Equipment.
B. Accept doors on site in manufacturer's packaging. Inspect for damage.
C. Break seal on-site to permit ventilation.

1.8 FIELD MEASUREMENTS

A. Verify that field measurements are as instructed by the steel door manufacturer.

1.9 COORDINATION

A. Coordinate the work with door opening construction, door frame and door hardware installation.

PART 2 - PRODUCTS

2.1 DOORS AND PANELS

A. Exterior Doors Non-thermally Broken: SDI-100 Grade III Extra Heavy-Duty Model 2. Seamless - Composite Construction, 1-3/4 inches, Level A.
B. Interior Doors (Non-rated): SDI-100 Grade II Heavy Duty, Model 2. Seamless - Composite Construction, 1-3/4 inches, Level B.

2.2 DOOR CONSTRUCTION

A. Face: Steel sheet in accordance with ANSI/SDI-100.
B. Core:
   1. Polystyrene foam at exterior doors.
   2. Cardboard honeycomb at interior non-fire rated doors.
   3. Mineral fiberboard at interior fire rated and acoustic doors.
C. Thermal Insulated Door: Total insulation R value of 7, measured in accordance with ASTM C236.

2.3 ACCESSORIES

A. Removable Stops: Rolled steel shape, mitered corners; prepared for countersink style tamper proof screws.
B. Primer: Zinc chromate type.

2.4 FABRICATION

A. Fabricate doors with hardware reinforcement welded in place.
B. Close top and bottom edge of exterior doors with flush end closure. Seal joints watertight.
C. Configure exterior doors with special profile to receive recessed weatherstripping.

2.5 FINISH

A. Steel Sheet: Galvanized to ASTM A525 A60.

B. Primer: Baked.
C. Factory Finish: Baked enamel, color as selected.

PART 3 - EXECUTION

3.1 EXAMINATION

A. Verify substrate conditions under provisions of Section 013113 - Coordination and Meetings.
B. Verify that opening sizes and tolerances are acceptable.

3.2 INSTALLATION

A. Install doors in accordance with ANSI/SDI-100 and DHI.
B. Coordinate installation of doors with installation of frames specified.
C. Touch-up factory finished doors and frames.

3.3 ERECTION TOLERANCES

A. Maximum Diagonal Distortion: 1/16 inch measured with straight edge, corner to corner.

3.4 ADJUSTING

A. Adjust door for smooth and balanced door movement.

END OF SECTION 081100

JEFFERSON COUNTY ENGINEERING DEPARTMENT
JCSO HANGAR BUILDING

SECTION 083323 - OVERHEAD COILING DOORS

PART 1 - GENERAL

1.1 SECTION INCLUDES

A. Overhead coiling service doors.

1.2 REFERENCES

A. ASTM A 653 - Standard Specification for Steel Sheet, Zinc-Coated (Galvanized) or Zinc-Iron Alloy-Coated (Galvannealed) by the Hot-Dip Process.
B. ASTM A 666 - Standard Specification for Austenitic Stainless Steel Sheet, Strip, Plate, and Flat Bar.
C. ASTM A 924 - Standard Specification for General Requirements for Steel Sheet, Metallic-Coated by the Hot-Dip Process.
D. NEMA 250 - Enclosures for Electrical Equipment (1000 Volts Maximum).
E. NEMA MG 1 - Motors and Generators.

1.3 DESIGN / PERFORMANCE REQUIREMENTS

A. Wind Loads: Design door assembly to withstand wind/suction load without damage to door or assembly components.
    1. Design Wind Load: 140 MPH - 3 Second Burst.
B. Operation: Design door assembly, including operator, to operate for not less than 20,000 cycles.

1.4 SUBMITTALS

A. Product Data: Manufacturer's data sheets on each product to be used, including:
    1. Preparation instructions and recommendations.
    2. Storage and handling requirements and recommendations.
    3. Details of construction and fabrication.
    4. Installation instructions.
B. Shop Drawings: Include detailed plans, elevations, details of framing members, anchoring methods, required clearances, hardware, and accessories. Include relationship with adjacent construction.
C. Selection Samples: For each finish product specified, two complete sets of color chips representing manufacturer's full range of available colors and patterns.
D. Manufacturer's Certificates: Certify products meet or exceed specified requirements.
E. Operation and Maintenance Data: Submit lubrication requirements and frequency, and periodic adjustments required.

1.5 QUALITY ASSURANCE

A. Manufacturer Qualifications: Company specializing in performing Work of this section with a minimum of five years experience in the fabrication and installation of security closures.
B. Installer Qualifications: Installer Qualifications: Company specializing in performing Work of this section with minimum three years and approved by manufacturer.

1.6 DELIVERY, STORAGE, AND HANDLING

A. Store products in manufacturer's unopened packaging until ready for installation.
B. Protect materials from exposure to moisture. Do not deliver until after wet work is

complete and dry.

C. Store materials in a dry, warm, ventilated weathertight location.

1.7 PROJECT CONDITIONS

A. Maintain environmental conditions (temperature, humidity, and ventilation) within limits recommended by manufacturer for optimum results. Do not install products under environmental conditions outside manufacturer's absolute limits.

1.8 COORDINATION

A. Coordinate Work with other operations and installation of adjacent materials to avoid damage to installed materials.

PART 2 - PRODUCTS

2.1 MANUFACTURERS

A. Acceptable Manufacturer: Overhead Door Corp.
B. Substitutions: Or Equal.

2.2 OVERHEAD COILING SERVICE DOORS

A. Industrial Doors: Overhead Door Corporation, 610 Series Service Doors.
   1. Curtain: Interlocking roll-formed slats as specified following. Endlocks shall be attached to each end of alternate slats to prevent lateral movement.
   2. Finish:
      a. Galvanized Steel: Slats and hood galvanized in accordance with ASTM A 653 and receive rust-inhibitive, roll coating process, including 0.2 mils thick baked-on prime paint, and 0.6 mils thick baked-on polyester top coat.
         1) Non-galvanized exposed ferrous surfaces shall receive one coat of rust-inhibitive primer.
         2) Top Coat Color:
            a) Powder coating finish in color as selected by Owner from manufacturer's standard color palette.
      b. Vinyl bottom seal.
      c. Guide weatherseal.
   3. Bottom Bar:
      a. Two galvanized steel angles.
   4. Guides:
      a. Three structural steel angles with minimum thickness of 3/16 inch for doors over 15 feet 4 inches wide or high.
   5. Brackets:
      a. Hot rolled steel to support counterbalance, curtain and hood.
      b. Galvanized steel to support counterbalance, curtain and hood.
   6. Counterbalance: Helical torsion spring type housed in a steel tube or pipe barrel, supporting the curtain with deflection limited to 0.03 inch per foot of span. Counterbalance is adjustable by means of an adjusting tension wheel.
   7. Hood:
      a. 24 gauge galvanized steel with intermediate supports as required.
      b. Stainless steel, 24 gauge hood with intermediate supports as required.
      c. Aluminum hood with intermediate supports as required.
   8. Manual Operation:

a. Chain hoist for doors over 96 SF.

9. Locking:
   a. Interior bottom bar slide bolt for manually operated doors.
   b. Chain keeper locks for chain hoist operation.
10. Wall Mounting Condition:
   a. Face-of-wall mounting.

PART 3 - EXECUTION

3.1 EXAMINATION

A. Verify opening sizes, tolerances and conditions are acceptable.
B. Examine conditions of substrates, supports, and other conditions under which this work is to be performed.
C. If substrate preparation is the responsibility of another installer, notify Architect of unsatisfactory preparation before proceeding.

3.2 PREPARATION

A. Clean surfaces thoroughly prior to installation.
B. Prepare surfaces using the methods recommended by the manufacturer for achieving the best result for the substrate under the project conditions.

3.3 INSTALLATION

A. Install in accordance with manufacturer's instructions.

3.4 ADJUSTING

A. Test for proper operation and adjust as necessary to provide proper operation without binding or distortion.
B. Adjust hardware and operating assemblies for smooth and noiseless operation.

3.5 CLEANING

A. Clean curtain and components using non-abrasive materials and methods recommended by manufacturer.
B. Remove labels and visible markings.
C. Touch-up, repair or replace damaged products before Substantial Completion.

3.6 PROTECTION

A. Protect installed products until completion of project.

END OF SECTION 083323

JEFFERSON COUNTY ENGINEERING DEPARTMENT
JCSO HANGAR BUILDING

SECTION 083324 – SINGLE SPAN HYDRAULIC HANGAR DOOR

PART 1 - QUANTITY

1.1 Doors for this project will consist of (1) Single Span Hydraulic door

PART 2 - SIZE OF DOOR

2.1 Hanger door with door in up position, shall have a minimum clear opening width of (50’-0”) as shown in the plans and a minimum clear height of (16’-0”) above finished floor elevation.

Note: the hydraulic single span when in a fully open position will be lying flat which will not shed water off when in a full open position. Unless the door is to open with a slight slope to provide enough proper drainage to the door covering when the door is in a full open position.

PART 3 - PLACEMENT OF THE SINGLE SPAN HYDRAULIC DOOR UNTO THE BUILDING

3.1 Door shall be mounted flush with exterior walls of building.

PART 4 - CONTRACTORS REQUIREMENTS: DESIGN CRITERIA

4.1 The single span hangar door shall be designed to the same loading requirements for live, dead and wind loads as the hangar building.

4.2 The doors shall be engineered to resist all anticipated loads without sagging, bowing or conflicting with its smooth and efficient operation.

4.3 Design for wind load as required by ASCE 7-10

Wind Load 140 mph – Exposure C

4.4 The design shall be furnished, approved and sealed by a professional engineer registered in the state of Texas.

4.5 The building header shall be designed to accommodate horizontal and vertical building deflections to support the single span door in all positions (with the proper lateral bracing) if hangar door chosen is not a self-supporting unit.

4.6 The building’s door columns shall be framed of the proper design and size to reinforce the opening (with lateral bracing) and to carry all loads and vibrations imposed thereon if hangar door chosen is not a self-supporting unit.

4.7 The single span door should have solid footing with sill directly underneath the door frame and extending outward from the door to provide a base for the door’s weather seal. This also prevents flow of water into, or under, the door installation.

4.8 The finished floor of the building should be designed to prevent flow of water under the door installation. Sills shall have a slight slope outward of the single span hydraulic door to prevent water flow under the door installation.

PART 5 - ELECTRICAL REQUIREMENTS

5.1 The building contractor shall furnish and install a prewired electrical door operating mechanism to control each single span door.

5.2 The contractor is responsible and required to completely install the prewired electrical door operating mechanism, push button controls, devices and electrical conduit and wiring to the door operating controls.

5.3 The electrical door mechanism and control shall be field wired by the contractor (not the door manufacturer).

5.4 Control panel with 24 volt up/down/off switch pre-wired to motor, and over-ride controls with the required number of adequately sized insulated electrical conductors.

5.5 Electrical contractor will be responsible for installing a disconnect for the hydraulic pump as well as the feeder from the disconnect to the equipment.

PART 6 - ELECTRIC POWER OPERATOR FOR THE SINGLE SPAN HYDRAULIC DOORS

6.1 All electrical controls and devices shall conform to the requirements of the current National Electrical Code 513, NEMA, and be UL approved.

6.2 Provide UL Listed Electric Operator, size and type as recommended by the manufacturer.

6.3 The operator is furnished complete and consists of a motor and factory-wired control panels consisting of main fused disconnect switch, magnetic reversing starters, limit switches and push button controls, control circuit transformers, relays, timing devices, and warning devices.

PART 7 - SUBMITTALS

7.1 Product Data: Submit manufacturer’s A1, A2, A3, A4, A5, A6 Spec Sheets for each single span door, plus product data and installation instructions. Include details of construction relative to materials, dimensions of individual components, profiles, and finishes. Provide roughing-in diagrams. Include the following:

A. Summary of forces and loads on walls and jambs if hangar door chosen is not a self-supporting unit.

B. Setting drawings, templates, and installation instructions for built-in or embedded anchor devices.

7.2 Shop Drawings: Submit shop drawings for approval prior to fabrication. Include detailed plans, elevations, details of framing members, required clearance, anchors and accessories. Include relationship with adjacent materials. The make and type of door, operators and controls shall be clearly shown. Door weight, method of suspension, operation, and all fastenings shall be indicated.

7.3 Submit three (3) copies each of the following manufacturer's Manuals / Diagrams

A. Single Span Hydraulic Door Literature

B. Installation Manual

C. Operating Instructions

D. Maintenance data/manual.

E. Safety Decal Placement Guide Manual / Warning Labels

F. Electrical System Manual for the Single Span Hydraulic Door System

1. Electrical Schematics
2. Electrical Wiring Diagram

G. Diagrams of potentially hazardous locations related to the operation of the door.

H. Shop drawings for approval.

7.4 Submit shop drawings specific for this project.

NOTE: Generalized project drawings not specific to this project will not be acceptable

PART 8 - QUALIY ASSURANCE

8.1 Source Limitations: Obtain Single Span Hydraulic Door through one source from a single manufacturer.

8.2 Manufacturer Qualifications: Engage a firm experienced in manufacturing Single Span Hydraulic Doors similar to those indicated for this Project and with a record of successful in-service performance.

8.3 Installer Qualifications: Engage an experienced installer who is an authorized representative of the door manufacturer for both installation and maintenance of units required for this Project.

8.4 Product Options: Drawings indicate size, profiles, and dimensional requirements of Single Span Hydraulic Door and accessories. Other manufacturers' systems with equal performance and dimensional characteristics may be considered. Refer to available UPGRADE EQUIPMENT.

8.5 Pre-Installation Conference: Schedule a pre-installation conference prior to commencement of field operations that might affect installation of Single Span Hydraulic Door to establish procedures for maintaining optimum working conditions, and to coordinate this work with related and adjacent work.

8.6 The contractor shall touch up all scratches, abrasions or other slight painting defects with the same type and color of paint as originally applied.

PART 9 - DELIVERY, STORAGE AND HANDLING

9.1 Deliver materials and products in manufacturer's labeled protective packages. Store and handle in strict compliance with manufacturer's written instructions and recommendations. Protect from damage from weather, excessive temperatures and constructions operations.

9.2 Inspect vertical Single Span Hydraulic door upon delivery for damage. Minor damages may be repaired provided refinished items are equal in all respects to new work and acceptable to Architect. Otherwise, remove and replace damaged items as directed.

9.3 Place Single Span Hydraulic Door frame units on minimum 4" high wood blocking. Store doors components & Packages at building site under cover. Avoid use of non-vented plastic or canvas shelters which could create humidity chamber. If cardboard wrapper on door becomes wet, remove carton immediately.

9.4 The contractor shall store the sheet, panels, components and other manufactured items so that they will not be damaged or deformed. Store metal sheets or panels so that water accumulations will drain freely. Do not store sheets or panels in contact with other materials which might cause staining.

PART 10 - APPROVED MANUFACTURERS

10.1 The Single Span Hydraulic Doors supplied by a manufacturer who is regularly engaged in the manufacture of aircraft hangar doors, and upon request from the owner provide a list of completed projects. Single Span Hydraulic Door shall be as manufactured by:

- Higher Power
- Schweiss Bi-Fold Doors

10.2 Other manufacturers seeking approval of their products must comply with requirements of the Instructions to Bidders.

PART 11 - DOOR FRAMEWORK - FABRICATION / CONSTRUCTION REQUIREMENTS

11.1 Hangar doors shall be of the electrically operated single span canopy type and shall be integral with the hangar building design unless door chosen is a self-supporting unit.

11.2 When in the open position the doors shall have a slight slope to direct drainage away from the building.

CAUTION: Do not have the door lying flat when in a full open position

11.3 Door shall be hinged horizontally at the top, and be arranged to open by moving frame out & up.

11.4 Door frames shall have prelocated top hinges to align with the building truss members if door unit chosen is not self-supporting unit.

11.5 Door shall be self-contained with only the top hinges, Side Column Cylinders supports Legs.

11.6 The door framework shall consist of jig welded steel sections engineered by the door manufacturer to resist all anticipated loads without sagging, bowing or conflicting with its smooth operation.

11.7 All labor, materials, accessories, equipment and services necessary to furnish a complete installation of a single span hangar door as indicated by the manufacturer, including frame, sections, brackets, guides, side column cylinders, supports, legs, hardware, operators, and installation instructions.

11.8 Shop connections shall be welded.

11.9 Field connections shall be bolted.

PART 12 - HEAVY DUTY HINGES

12.1 Heavy Duty Steel Hinges furnished complete.

PART 13 - DOOR TRUSS'S

CHOOSE ONE:

13.1 External Truss - Standard

A. Provide an extra heavy duty truss to the exterior side of the single span door.

PART 14 - WIND PINS

CHOOSE ONE:

14.1 Manual Wind Pin

A. Include center wind pins 1" diameter minimum - provide a sturdy installation if required.

PART 15 - SELF CONTAINED LATCHING SYSTEM'S - STANDARD

15.1 Standard Latch System - Standard

A. The latching system shall secure the door and hold in a fully closed position on both sides of the doors.

PART 16 - PAINT

16.1 The door frame members and parts shall be factory primer finished with gray or red oxide primer.

PART 17 - TOP & BOTTOM RUBBER SEALS

17.1 Provide manufacturer’s standard seal continuous at top, bottom of each door.

17.2 The door shall be equipped with neoprene weather stripping at heads and jambs to prevent flow of moisture into the door installation. Sills shall have a special fabric reinforced high grade rubber astragal. The entire door perimeter shall be weather tight.

NOTE: Existing bituminous surface varies and seals shall be placed accordingly.

PART 18 - METAL SIDING FOR THE SINGLE SPAN DOOR (Optional)

18.1 Install door skins to completely clad the door frames, use noncorrosive fasteners.

18.2 The hangar door covering shall meet the requirements as specified for the metal siding of the hangar and the exposed surface shall be colored to match the exterior siding of the hangar.

18.3 Install the the door skin and all trims according to the “One Piece” door recommendations.

PART 19 - Inside Liner Panel - CHOOSE ONE: (Optional)

19.1 The bottom half of the Single Span Hangar door shall be lined on the inside of the door frame.

19.2 Hangar doors shall be completely lined on the inside of the door frame (entire inside of the door frame).

PART 20 - “ONE PIECE” ELECTRIC HYDRAULIC POWER DOOR OPERATOR

20.1 Location of Power Operator

A. Motor must be able to be located on either side of door frame.

20.2 Electrical Controls

A. All electrical controls and devices shall be designed to meet National Electrical Code Section 513.

B. All controls are pre-wired and factory tested.

PART 21 - ELECTRIC MOTOR / VOLTAGE / PHASE

21.1 ELECTRIC MOTOR / VOLTAGE / PHASE

A. Service: 240 VAC, 60 Hz single phase, 3 wire service.

B. Single Phase motors shall be totally enclosed capacitor start.

C. Single Phase, 240 volt electric motor with fused protection direct mounted to a hydraulic pump

D. The size of the motor shall be as recommended by the manufacturer.

E. Door operator shall be pre-wired at factory complete with 24 V.A.C. control system.

PART 22 - HYDRAULIC Gear Motor PUMP

22.1 The hydraulic gear Motor pump system, must stop and hold door in any position of door travel.

22.2 Provide high starting torque, reversible, continuous duty, class A insulated, electric motors complying with NEMA MG 1, with fused protection, sized to start, accelerate, and operate door in either direction, from any position.

22.3 A magnetic starter, with 24v control unit for reliability is standard.

22.4 Design operator so motor may be removed without disturbing limit switch adjustment and without affecting emergency auxiliary operator.

PART 23 - CONTROL STATION

23.1 2-Button Constant Hold Control Station - for opening & closing your single span door

A. 2-button constant contact dead man switch, prevents operator from leaving control panel while door is in motion, either up or down.

B. When the operator takes his hand off the up /down button, the door immediately stops regardless of its opening / closing position.

PART 24 - ELECTRICAL DISCONNECT

24.1 Provide Electrical Disconnect to completely disable the door, for service, maintenance, emergency backup operations.

24.2 Mount disconnect so it is accessible from floor level.

PART 25 - EXECUTION

25.1 Examination

A. Examine wall and overhead areas, including opening framing and blocking, with Installer present, for compliance with requirements for installation tolerances, clearances, and other conditions affecting performance of Work of this section.

B. Proceed with installation only after unsatisfactory conditions have been corrected.

PART 26 - INSTALLATION

26.1 General:

A. Door manufacturer is required to coordinate with the metal building manufacturer in the development of the exact installation details, and provide weights and door loadings to building manufacturer if door chosen is not a self-supporting unit.

B. Install door, cylinder columns, and operating equipment complete with necessary hardware, jamb and head mold strips, anchors, inserts, hangers, and equipment supports according to Shop Drawing’s, manufacturer’s written instructions, and as specified.

C. Fasten/ Hang horizontal track, hinges from structural overhead framing with angle or channel hangers welded and/or bolt fastened in place.Fasten/ Hang vertical cylinder columns, from structural column framing with angle or channel hangers welded and/or bolt fastened in place. Provide sway bracing, diagonal bracing, and reinforcement as required for rigid installation of track, hinges and door-operating equipment. (If door chosen is not a self-supporting unit.)

26.2 Recommended Clear Opening

A. Each single span door has a recommended clear opening setting, specified by the manufacture. Do not over travel the door beyond the recommended setting.

26.3 Exterior Wall Panels

A. Metal building erector to install the same exterior wall panels that are on the building, use the same type on the single span door. Install the proper trims that are recommended by the manufacturer.

26.4 Apply Proper Safety Markings

A. Apply Proper Markings for any potentially hazardous locations related to the operation of the door.

B. Follow the pictorial diagram included in the door installation manual.

26.5 Installing Warning Labels

A. Furnish warning labels for any potentially hazardous locations related to the operation of the door.

B. Fasten warning labels to the single span door frame and by the operator's station in accordance with manufacturer's instructions, NO EXCEPTIONS.

26.6 Installer Certificates: Signed by manufacturer certifying that installers comply w/ specified requirements.

26.7 Installing Services - (Optional)

A. Install Representative, Manufacturer's representative to supervise assembly of door.

PART 27 - ELECTRICAL WORK - Contractor is responsible for:

27.1 The contractor is responsible and required to completely install the prewired electrical door operating mechanism, push button controls, devices and electrical conduit & wiring to the door operating controls.

27.2 Detail wiring for power, signal, and control systems.

A. Differentiate between manufacturer-installed and field installed wiring & between components provided by door manufacturer and those provided by others.

27.3 Install single span doors in accordance with manufacturer's instructions.

PART 30 - ADJUST & CLEAN

28.1 Lubricate, test adjust doors - to operate easily, free from warp, twist, or distortion and fitting weathertight for entire perimeter.

28.2 Prime Coat Touch Up:

A. Immediately after erection, sand smooth any rusted or damaged areas of prime coat.

B. Touch-up damaged coating and finishes and repair minor damage.

C. Clean exposed surfaces using non-abrasive materials and methods recommended by manufacturer of material or product being cleaned, and apply touch up of compatible air drying primer.

28.3 Final Adjustments:

A. Lubricate Hinges, verify recommended clear opening adjustments open and closed to operate easily , free from warp, twist , or distortion and fitting weathertight for the entire perimeter.

B. Check and readjust operating finish hardware items, leaving vertical “One Piece” doors undamaged and in complete and proper operating condition.

PART 29 - DEMONSTRATION - (Optional) - Choose From The Following:

29.1 Startup Services: Engage a qualified and authorized service representative to perform startup services and to train Owner’s maintenance personnel as specified below:

A. Test and adjust controls and safeties. Replace damaged and malfunctioning controls & equipment.

B. Train Owner’s maintenance personnel on procedures and schedules related to startup and shut down, operating, troubleshooting, servicing, and preventative maintenance.

C. Review data in the installation & maintenance manuals.

D. Schedule training with Owner at least 7 days advance notice.

PART 30 - WARRANTY

30.1 The Contractor shall warrant the door to be free of defects in accordance with the General Conditions, except the warranty shall be extended by manufacturer’s 2 - year written warranty against defects in materials and workmanship, against problems which arise through normal anticipated usage of the door during the warranty period. The warranty shall be signed by the manufacturer.

PART 31 - UPGRADE EQUIPMENT

Note to Specifier: Select desired upgrade options below, and verify materials and insulation / application with the manufacturer; those related to door operating safety relative to danger to humans, and followed by an (R), may be required for your project; delete (R) in final text for those selected.

31.1 Top Limit Override Safety Switches

Upper override switch that disconnects power to door if upper limit fails or if limits are overridden. This safety feature is designed to prevent the door from traveling beyond its recommended clear opening height. If the door passes its full clear opening height, it will activate the override and stop the door automatically.

31.2 Electric Photo Eye Sensors (R)

A. Option 2 - Electric Photo Eye Sensors mounted near floor level prevent or stop & reverse the door when an obstruction brakes the detection beam. If the beam is broken, door will reverse to a fully open position. When using this system use a Top Limit Override switch to shut the motored pump off when door reaches a full open position.

31.3 Door Base Safety Edge (R)

Electrical sensing switch along door bottom stops door if it comes in contact with an obstruction. Door will then reverse to a fully open position.

A. Safety edge must be capable of protecting the entire width of the door opening.

B. The only approved manufacturer of the safety sensing edge is Miller Edge, Inc., West Grove, PA (800-220-3343) Model MU-22

31.4 Emergency Operation - Auxiliary Backup System

A. Auxiliary Operated Backup

1. The door shall be capable of being auxiliary operated in the event of a power outage.
2. Include disconnect device to prevent motor from operating when manually operating door.
3. Manual opp. of door shall be designed to avoid damage to doors, safety edges, & electrical system.
4. Provide safety operating instructions: Observe all safety precautions according to the manufacturer’s precautions.

31.5 Radio Control System consisting of the following:

A. 3-channel coaxial receiver to open, close, and stop door per operator.

B. Multifunction remote control transmitter. (Quantity of 2 per door)

IMPORTANT: When the operator takes his hand off the remote control transmitter, the door immediately stops regardless of its opening / closing position.

SECTION 087100 - DOOR HARDWARE

PART 1 - GENERAL

1.1 SECTION INCLUDES

A. Hardware for hollow steel doors.
B. Thresholds.
C. Weatherstripping, seals and door gaskets.

1.2 REFERENCES

A. Americans with Disabilities Act.
B. ANSI A117.1 - Specifications for Making Buildings and Facilities Accessible to and Useable by Physically Handicapped People.
C. State of Texas Handicap Accessibility Standards.
D. NFPA 80 - Fire Doors and Windows.
E. AWI - Architectural Woodwork Institute - Quality Standards.
F. NFPA 101 - Code for Safety to Life from Fire in Buildings and Structures.
G. NFPA 252 - Fire Tests of Door Assemblies.
H. UL 10B - Fire Tests of Door Assemblies.
I. UL 305 - Panic Hardware.

1.3 DESIGN / PERFORMANCE REQUIREMENTS (EXTERIOR HARDWARE ONLY)

A. Wind Loads: Design door assembly to withstand wind/suction load without damage to door or assembly components.
   1. Design Wind Load: 140 MPH - 3 Second Burst.
B. Operation: Design door assembly, including operator, to operate for not less than 20,000 cycles.

1.4 SUBMITTALS

A. Shop Drawings: Indicate locations and mounting heights of each type of hardware.
B. Submit manufacturer's parts lists, and templates.
C. Manufacturer's Installation Instructions.
D. Certification: Submit notarized certification indicating that hardware furnished for labeled doors and doors requiring physically handicapped access complies with requirements of governing authorities applicable regulations.

1.5 PROJECT RECORD DOCUMENTS

A. Record actual locations of installed cylinders and their master key code.

1.6 OPERATION AND MAINTENANCE DATA

A. Maintenance Data: Include data on operating hardware, lubrication requirements, and inspection procedures related to preventative maintenance.

1.7 QUALITY ASSURANCE

A. Perform work in accordance with the following requirements:
   1. Americans with Disabilities Act.
   2. ANSI A117.1 - Specifications for Making Buildings and Facilities Accessible to and Usable by Physically Handicapped People.

3. NFPA 101.
4. NFPA 80.
5. NFPA 252.
6. Elimination of Architectural Barriers Act of Texas, Article 7, Article 601b, Rules 115.51 throught 115.61 and Rule 115.62.

1.8 QUALIFICATIONS

A. Hardware Manufacturer: Company specializing in manufacturing the Products specified in this section with minimum three years documented experience.
B. Hardware Supplier: Company specializing in supplying institutional door hardware with three years documented experience.
C. Hardware Supplier: Company specializing in supplying commercial door hardware with three years documented experience.
D. Hardware Supplier: Company specializing in supplying residential door hardware with three years documented experience.
E. Hardware Supplier Personnel: Employ an Architectural Hardware Consultant (AHC) to assist in the work of this section.

1.9 REGULATORY REQUIREMENTS

A. Conform to applicable code for requirements applicable to fire rated doors and frames.
B. Products Requiring Electrical Connection: Listed and classified by Underwriters' Laboratories, Inc., as suitable for the purpose specified and indicated.

1.10 PRE-INSTALLATION CONFERENCE

A. Convene two weeks prior to commencing work of this section, under provisions of Section 01039.

1.11 DELIVERY, STORAGE, AND HANDLING

A. Package hardware items individually; label and identify each package with door opening code to match hardware schedule.
B. Deliver keys to Owner by security shipment direct from hardware supplier.

1.12 COORDINATION

A. Coordinate the work with other directly affected sections involving manufacture or fabrication of internal reinforcement for door hardware.

1.13 WARRANTY

A. Warranty: Include coverage for latch and lock sets and door closers.

1.14 MAINTENANCE MATERIALS

A. Provide special wrenches and tools applicable to each different or special hardware component.
B. Provide maintenance tools and accessories supplied by hardware component manufacturer.

1.15 EXTRA MATERIALS

A. Provide ten extra key lock cylinders for each master keyed group.

PART 2 - PRODUCTS

2.1 ACCEPTABLE MANUFACTURERS

A Hinges: Hager, McKinney, and Stanley.
B. Pivots: Hager, McKinney, and Stanley.
C. Latch Sets: Sargent, Schlage, and Yale.
D. Cylinder Locks: Sargent, Schlage, and Yale.
E. Door Closers: LCN, Rixson, and Sargent.
F. Gasketing and Thresholds: Zero, Pemko and National Guard Products.

2.2 HARDWARE SELECTIONS

A. General:
1. Furnish all hardware for proper installation and operation of door movement shown on drawings.

2. Quality Standards:
a) Manufacturer: ANSI A156
b) Finish: ANSI A156.18
c) Do not furnish "optional" materials or finishes, except as otherwise specified.
3. Furnish all screws and fasteners required for complete installation of hardware. All exposed screws and fasteners shall match hardware finish.

B. Hinges, Butts and Pivots:
1. Exterior Doors:
a) Five knuckle, ball bearing, with non-removable pin.
b) All doors: TA-TB2714 - Size 4 1/2 x 4 1/2.
c) Provide hinges with set screw in barrel, concealed with door in closed position.
d) Provide steel pins throughout.
2. Interior Doors:
a) Hinge:
1. Five knuckle, non-rising pin.
2. Doors without closers: T2714 - Size 4 1/2 x 4 1/2.
3. Doors with closers: TA-TB2714 - Size 4 1/2 x 4 1/2.
b) Spring Hinge: 1502 Standard Weight
1. Spring hinge shall only be located in the middle hinge position.
3. Number of Hinges:
a) Number of hinges per door based upon door height.
1. 60 inches or less: 1 pair
2. Greater than 60 but less than 90 inches: 1 1/2 pair.
3. Greater than 90 but less than 120 inches: 2 pair.
4. Greater than 120 inches: 1 additional hinge per 30 inches of height above 120 inches.
4. Tips: Flat button and matching plug, finished to match leaves, except where hospital tip (HT) indicated.

C. Lock Cylinders and Keying:
1. Supplier shall meet with Owner in order to finalize keying requirements.

D. Locks, Latches and Bolts:
   1. Provide manufacturer's standard wrought box strike for each latch or lock bolt, with curved lip extended to protect frame, finished to match hardware set.
   2. Provide dust proof strikes for foot bolts, except where special threshold construction provides non-recessed strike for bolt.
   3. Provide roller-type strikes where recommended by manufacturer of the latch and lock units.
   4. Lock Throw:
      a) Single leaf doors: Provide 1/2 inch minimum throw on latch and deadlock bolts.
      b) Pair doors: Provide 5/8 inch minimum throw on latch and deadlock bolts.
      c) Rated openings: Comply with UL requirements for throw of bolts.

E. Hardware Finishes:
   1. Provide matching finishes for hardware units at each door or opening, to the greatest extent possible, and except as otherwise noted. In general, match items to the manufacturer's standard finish for the latch and lock set (or push-pull units if no latch-lock set) for color and texture.
   2. The designations used in schedules and elsewhere to indicate hardware finishes are the industry-recognized standard commercial finishes, except as noted-otherwise.

F. Door Stops: Furnish a door stop for all door leafs. Where a door strikes a wall, furnish a wall bumper or dome stop equal to Trimco 121ORP or W1274CCS. In the event a wall bumper or dome stop cannot be used effectively, furnish an overhead stay as follows:
   1. Interior Doors: Overhead Stay equal to Sargent 1540 series.
   2. Exterior Doors: Overhead Stay equal to Sargent 590 series.

G. Door Silencers: All interior metal door frames, except for frames for lightproof and soundproof doors, shall be provided with Sargent Silencers 3346 as listed below:
   1. Single Swing Doors - 3 per door.
   2. Pairs of Doors - 2 per door.

2.3 KEYING

A. Door Locks: Master keyed. Include construction keying. Key to existing keying system.

PART 3 - EXECUTION

3.1 EXAMINATION

A. Verify that doors and frames are ready to receive work and dimensions are as instructed by the hardware manufacturer.
B. Verify that electric power is available to power operated devices and of the correct characteristics.

3.2 INSTALLATION

A. Install hardware in accordance with manufacturer's instructions.
B. Use templates provided by hardware item manufacturer.
C. Mounting heights for hardware shall comply with requirements of the Americans with Disabilities Act.

3.3 FIELD QUALITY CONTROL

A. Field inspection and testing will be performed under provisions of Section 01 45 00 - Quality Control.

B. Architectural Hardware Consultant to inspect installation and certify that hardware and ininstallation has been furnished and installed in accordance with manufacturer's instructions and as specified.

3.4 ADJUSTING

A. Adjust hardware for smooth operation.

3.5 PROTECTION OF FINISHED WORK

A. Do not permit adjacent work to damage hardware or finish.

END OF SECTION 087100

SECTION 092900 - GYPSUM BOARD

PART 1 - GENERAL

1.1 SUMMARY

A. Section Includes:
   1. Acoustical insulation.
   2. Gypsum board.
   3. Taping and bedding of gypsum board.

B. Related Sections:
   1. Division 01: Administrative, procedural, and temporary work requirements.

1.2 REFERENCES

A. ASTM International (ASTM):
   1. C475 - Standard Specification for Joint Compound and Joint Tape for Finishing Gypsum Board.
   2. C514 - Standard Specification for Nails for the Application of Gypsum Wallboard.
   3. C665 - Standard Specification for Mineral Fiber Blanket Thermal Insulation for Wood Frame and Light Construction Buildings.
   4. C1002 - Standard Specification for Steel Drill Screws for the Application of Gypsum Board.
   5. C1047 - Standard Specifications for Accessories for Gypsum Wallboard and Gypsum Veneer Base.
   6. C1178 - Standard Specification for Glass Mat Water-Resistant Gypsum Backing Panel.
   7. C1396 - Standard Specification for Gypsum Board.
   8. C1629 - Standard Classification for Abuse-Resistant Nondecorated Interior Gypsum Panel Products and Fiber-Reinforced Cement Panels.
   9. D3273 - Standard Test Method for Resistance to Growth of Mold on the Surface of Interior Coatings in an Environmental Chamber.
   10. E90 - Standard Test Method for Airborne Sound Transmission Loss of Building Partitions.
   11. E413 - Standard Test Method for Classification for Rating Sound Insulation.

B. Gypsum Association (GA):
   1. GA-214 - Levels of Gypsum Board Finish.
   2. GA-216 - Recommended Specifications for the Application and Finishing of Gypsum Board.
   3. GA-600 - Fire Resistance Design Manual.

C. Underwriters Laboratories, Inc. (UL) - Fire Resistance Directory.

1.5 PROJECT CONDITIONS

A. Do not install gypsum board until building is substantially weathertight.

B. Maintain temperature in spaces in which work is being performed above 50 degrees F during and after installation.

PART 2 - PRODUCTS

2.1 MANUFACTURERS

A. Acceptable Manufacturers - Gypsum Panels:
   1. CertainTeed Gypsum, Inc.
   2. GP Gypsum Corporation.
   3. National Gypsum Co.
   4. USG Corporation.

B. Substitutions: Under provisions of Division 01.

2.2 MATERIALS - GYPSUM PANELS

A. Regular Gypsum Board: ASTM C1396; 48 inches wide x 5/8 inch thick, maximum practical length, tapered edge.

B. Fire Resistant Gypsum Board: ASTM C1396, Type X; 48 inches wide x 5/8 inch thick, maximum practical length, tapered edge; apply to fire rated assemblies.

C. Water Resistant Gypsum Board: ASTM C1396; 48 inches wide x 5/8 inch thick, maximum practical length, water resistant; apply to walls to receive tile or sanitary wall panels and walls at janitor closets and toilet rooms.

D. Fire Resistant, Water Resistant Gypsum Board: ASTM C1396, Type X; 48 inches wide x 5/8 inch thick, maximum practical length, water resistant; apply to fire rated walls to receive tile or sanitary wall panels and walls at janitor closets, toilet rooms and showers.

2.3 ACCESSORIES

A. Fasteners: ASTM C1002, screws, minimum 5/8 inch penetration into framing.

B. Trim Accessories: ASTM C1047.
   1. Material: Formed steel, minimum 26 gage core steel, hot dip galvanized finish, expanded flanges.
   2. Corner reinforcement: GA-216, Type CB-100 x 100.
   3. Casing: GA-216, Type LC.
   4. Control joint.

C. Joint Treatment Materials:
   1. Reinforcing tape and joint compound; ASTM C475.

PART 3 - EXECUTION

3.1 INSTALLATION OF GYPSUM PANELS

A. Install panels and accessories in accordance with ASTM C754, GA-216, and manufacturer's instructions.

B. Accurately cut panels to fit around openings and projections. Do not tear face paper or break gypsum core.

C. Apply panels at non fire-rated assemblies in most economical manner, with ends and edges occurring over supports.

D. Apply panels at fire-rated assemblies as required by design assembly.

E. Stagger joints on opposite sides of partitions.
F. Do not locate joints to align with edges of openings unless a control joint is installed.
G. Mechanically fasten single layer panels to framing. Place fasteners minimum 3/8 inch from edges of panels; drive heads slightly below surface. Stagger fasteners at abutting edges.
H. Apply face layer of double layer applications with joints offset from those in base layer; secure with mechanical fasteners to framing or with adhesive to base layer.
I. At deflection compensating head tracks, cut panels 1/2 inch short of structure at head; do not secure panels to top runner channel.
J. Treat cut edges and holes in moisture resistant gypsum board with joint sealer.
K. Where recessed items occur in fire rated partitions, box item on all sides with gypsum board as required to maintain continuity of fire rating.

3.2 INSTALLATION OF ACCESSORIES
A. Install in accordance with manufacturer's instructions.
B. Install corner reinforcement at outside corners. Use single lengths where length of corner does not exceed standard length.
C. Install casings where indicated and where gypsum board abuts dissimilar materials or stops with edge exposed.
D. Install control joints at ceilings:
1. At maximum 50 feet on center.
2. Where ceiling framing changes direction.
E. Install control joints at walls and partitions:
1. At changes in backup material.
2. At maximum 30 feet on center.
3. Above both jambs of openings in partitions.

3.3 JOINT TREATMENT
A. Treat joints and fasteners in gypsum board in accordance with GA-214.
B Levels of Finish:
1. Surfaces in plenums, service corridors, and janitor closets: Level 1 finish.
2. Surfaces to receive tile and stone: Level 2 finish.
3. Surfaces to receive flat or eggshell paints: Level 4 finish.
4. Surfaces to receive semigloss or gloss paints: Level 5 finish.

END OF SECTION 092900

SECTION 099123 - INTERIOR PAINTING

PART 1 - GENERAL

1.1 SECTION INCLUDES

A. Surface preparation and field application of paints on interior substrates.

1.2 REFERENCES

A. ASTM D 16 - Standard Terminology Relating to Paint, Varnish, Lacquer, and Related Products.

1.3 DEFINITIONS

A. Conform to definitions of terms in ASTM D16 in interpreting requirements of this specification section.

1.4 SUBMITTALS

A. Product Data: Provide manufacturer's printed product data on all coatings specified, including preparation and application instructions.

B. Selection Samples: Provide two sets of samples not less than one inch by two inches in size illustrating range of colors and textures available for each finishing product specified.

C. Verification Samples: Provide two samples of not less than six inches square illustrating selected colors and textures for each color specified.

1.5 DELIVERY, STORAGE, AND HANDLING

A. Deliver products to site in sealed and labeled containers. Labels shall include manufacturer's name, type of coating, brand name, lot number, estimated coverage, surface preparation requirements, drying time, cleanup instructions, color designation, and instructions for mixing.

B. Store paint products in covered, ventilated area at minimum ambient temperature of 45 degrees F and maximum ambient temperature of 90 degrees F.

1.6 ENVIRONMENTAL REQUIREMENTS

A. Do not apply products of this section outside acceptable range of conditions as specified by paint manufacturer.

B. Do not apply coatings when humidity is in excess of manufacturer's recommended limit.

PART 2 - PRODUCTS

2.1 MANUFACTURER

A. Sherwin Williams or approved substitute.

2.2 MATERIALS

A. Coatings: Ready mixed, except for field catalyzed coatings; having good flow

and brushing properties and consistent drying or curing behavior, free of sags and streaks.

B. Accessory Materials: Linseed oil, turpentine, paint thinners and other materials recommended by coatings manufacturer as necessary to achieve finishes specified.

C. Patching and Surface Preparation: Latex fillers as recommended by coatings manufacturer.

PART 3 - EXECUTION

3.1 EXAMINATION

A. Verify that site environmental conditions are appropriate and substrates are in proper condition to receive work of this section.

B. Verify that shop applied primers are compatible with specified finish coats.

C. Measure moisture content of surfaces using an electronic moisture meter. Do not begin application of coatings unless moisture content of surfaces is below paint manufacturer recommendations.

3.2 PREPARATION

A. Remove or mask electrical plates, hardware, light fixture trim, and similar fittings prior to beginning painting operations.

B. Correct defects and clean surfaces affecting work of this section. Remove existing coatings that are flaking or otherwise in unacceptable condition to receive paint.

C. Seal with shellac or other coating acceptable to paint manufacturer any marks or defects that might bleed through paint finishes.

D. Clean and prepare substrate per paint manufacturer requirements.

3.3 APPLICATION

A. Apply paint products in accordance with manufacturer's printed instructions. Do not apply coatings to surfaces that are not dry.

B. Apply each coat to uniform thickness and finish, with each coat slightly darker than preceding coat. Allow each coat to dry thoroughly before applying next coat.

C. Sand wood and metal surfaces lightly between coats. Vacuum surfaces free of loose particles prior to application of next coat.

3.4 CLEANING AND PROTECTION

A. Keep project premises free of painting-related debris. Collect material that may constitute a fire hazard, place in closed metal containers, and remove daily from site.

B. Protect work adjacent to painting operations from paint spatters and spills. Immediately remove paint that falls on finished surfaces not scheduled to receive paint, using materials and techniques that will not damage affected surfaces.

3.5 SCHEDULE

A. Smooth and Textured Drywall:
   1. Smooth and Textured Drywall: 1 coat Wall Primer.
   2. Eggshell Finish:
      a. Acrylic Latex:
         1) 1 coat appropriate wall primer.
         2) 2 coats 100 percent Acrylic Eggshell Enamel.

B. Architectural Metals:
   1. Shop primed ferrous metal:
      a. Touch up all bare or abraded areas with Alkyd Primer.
      b. 1 coat Alkyd Primer.
   2. Semi-Gloss Finish:
      a. Acrylic Latex:
         1) coat appropriate metal primer.
         2) 2 coats 100 percent Acrylic Semi-Gloss.

END OF SECTION 099123

JEFFERSON COUNTY ENGINEERING DEPARTMENT
JCSO HANGAR BUILDING

SECTION 220700 - PLUMBING SYSTEMS PIPING INSULATION

PART 1 - GENERAL

1.1 SECTION INCLUDES

A. Piping insulation.

1.2 RELATED SECTIONS

A. Drawings and general provisions of Contract, including General and Supplementary Conditions and Division-1 Specification sections, apply to work of this Section.
B. Division 15 - Mechanical Specifications.
C. Division 16 - Electrical Specifications.

1.3 REFERENCES

A. ASTM C665 - Mineral Fiber Blanket Thermal Insulation for Light Frame Construction and Manufactured Housing.
B. ASTM E84 - Test Method for Surface Burning Characteristics of Building Materials.
C. NFPA 255 - Test of Surface Burning Characteristics of Building Materials.
D. UL 723 - Tests for Surface Burning Characteristics of Building Materials.

1.4 QUALITY ASSURANCE

A. Installation: Company specializing in installation of the products required and/or specified in this section with minimum three years documented experience.

1.5 SUBMITTALS

A. Product Data: Provide data on product characteristics, performance criteria, limitations.
B. Manufacturer's Certificate: Certify that products meet or exceed specified requirements.

1.6 COORDINATION

A. Coordinate work under provisions of other trades.

1.7 REGULATORY REQUIREMENTS

A. Comply with all federal, state and local codes and ordinances relating to installation of piping insulation.

PART 2 - PRODUCTS

2.1 PIPE INSULATION

A. Insulation products shall have composite (insulation, jacket and adhesive used to adhere to jacket to the insulation) fire and smoke hazard ratings as tested under procedure ASTM E-84, NFPA 255 and U.L. 723, not exceeding flame spread of 25 and developed smoke of 50.

PART 3 - EXECUTION

3.1 EXAMINATION

A. Verify adequacy of backing and support framing.

B. Verify mechanical, electrical, and building items affecting work of this section are placed and ready to receive this work.

3.2 PIPE INSULATION

A. Install pipe insulation in a workmanlike manner and in compliance with all manufacturer's recommendations and code requirements.

3.3 HANGERS AND SUPPORTS

A. Install hangers for domestic water pipes 1" and larger outside of the insulation.
B. Provide a galvanized steel sheet-metal protection shield at each pipe hanger.
C. Provide 360degree segment of incompressible, load bearing insulation with matching vapor barrier jacket at each support point to prevent insulation from sagging or crushing. Thickness of rigid insulation shall match thickness as adjoining insulation and shall extend 1 inch beyond galvanized protection shield.
D. For individual domestic water pipes, install copper plated ring or band type hanger inside the insulation.
E. Where domestic water pipes are 1/2" and 3/4" pipe sizes, installed on trapeze hangers, place insulation jacket directly on hanger. Incompressible insulation segments and protection shields are not required.
F. Where domestic water pipes above 1" are installed on trapeze hangers, install incompressible insulation segments and protection shields.

1.2 DOMESTIC WATER PIPING INSULATION

A. Cover domestic cold water, domestic hot water and domestic return circulating water piping with fiberglass, one piece insulation with reinforced jacket.

END OF SECTION 220700

JEFFERSON COUNTY ENGINEERING DEPARTMENT
JCSO HANGAR BUILDING

SECTION 221116 - DOMESTIC WATER PIPING SYSTEMS

PART 1 - GENERAL

1.1 SECTION INCLUDES

A. Section includes ASTM F877 cross-linked polyethylene (PEX) tubing hot and cold water distribution systems, ASTM F876 cross-linked polyethylene (PEX) tube, ASTM F1807 fittings and ASTM F2159 fittings.

1.2 GENERAL

A. Use only the specified materials and procedures in fabricating the piping systems.
B. Extend and connect piping to all fixtures and equipment in the building as shown on the Drawings.
C. Provide all domestic water piping from the water meter, under the building slab, above grade, and inside throughout the building.
D. Locate the meter box and provide the domestic water tie in to the municipal water system. Coordinate with the Owner the location of the box and the direction of all water piping.

1.3 REFERENCES

A. ASTM E84 Standard Test Method for Surface Burning Characteristics of Building Materials.
B. ASTM F876 Standard Specification for Cross-linked Polyethylene (PEX) Tubing.
C. ASTM F877 Standard Specification for Cross-linked Polyethylene (PEX) Plastic Hot and Cold Water Distribution Systems.
D. ASTM F1807 Standard Specification for Metal Insert Fittings Utilizing a Copper Crimp Ring for SDR9 Cross-linked Polyethylene (PEX) Tubing.
E. ASTM F2159 Standard Specification for Plastic Insert Fittings Utilizing a Copper Crimp Ring for SDR9 Cross-linked Polyethylene (PEX) Tubing.
F. National Sanitation Foundation Standard 14 Plastics Piping System Components and Related Materials.
G. National Sanitation Foundation Standard 61 Drinking Water System Components – Health Effects.
H. Canadian Standards Association CAN/CSA B137.5 Cross-linked Polyethylene (PEX) Tubing Systems for Pressure Applications.
I. International Code Council (ICC) International Mechanical Code.
J. International Code Council (ICC) International Plumbing Code.
K. Plastic Pipe Institute (PPI) Technical Report TR-3 Policies and Procedures for Developing Recommended Hydrostatic Design Stresses for Thermoplastic Pipe Materials.
L. Plastic Pipe Institute (PPI) Technical Report TR-4 Recommended Hydrostatic Strengths and Design Stresses for Thermoplastic Piping and Fitting Compounds.

1.4 SYSTEM DESCRIPTION AND PERFORMANCE REQUIREMENTS

A. Design Requirements.
    1. Standard Grade hydrostatic pressure ratings from the Plastic Pipe Institute in accordance with TR-3 and listed in TR-4. The following three

standard-grade hydrostatic ratings are required;
a) 200 degrees F at 80 psi.
b) 180 degrees F at 100 psi.
c) 73 degrees F at 160 psi.

2. Tubing tested in general accordance with ASTM E84 for a flame spread/smoke developed index of 25/50 or less for the following PEX tube sizes encased with ‰inch fiberglass insulation;
a) 1 1/4 inch.
b) 1 1/2 inch.
c) 2 inch.

3. Tubing tested in general accordance with ASTM E84 for a flame spread/smoke developed index of 25/50 or less for the following PEX tube sizes;.
a) 3/8 inch.
b) 1/2 inch.
c) 5/8 inch.
d) 3/4 inch.
e) 1 inch.

B. Performance Requirements.
1. To provide a PEX tubing hot and cold potable water distribution system, which is manufactured, fabricated and installed to comply with regulatory agencies and to maintain performance criteria stated by the PEX tubing manufacturer without defects, damage or failure.
a) Comply with NSF Standard 14.
b) Comply with NSF Standard 61.
c) Show compliance with ASTM F877.

1.5 SUBMITTALS
A. General. Upon request, submit listed submittals in accordance with Conditions of the Contract and Division 1 Submittal Procedures Section
B. Product Data. Upon request, submit manufacturer's product submittal data, installation instructions and Manufacturer's Professional Installation Limited Warranty.
C. Shop Drawings. Upon request, provide installation drawings indicating tubing layout, manifold locations, plumbing fixtures supported and schedules with details required for installation of the system.
D. Samples. Upon request, submit selection and verification samples of piping.
E. Listing Certifications. Upon request, submit manufacturers third party listings.

1.6 QUALITY ASSURANCE
A. Installer Qualifications.
1. Utilize an installer having demonstrated experience on projects of similar size and complexity and possesses the skills and knowledge to install a PEX potable water distribution system.
2. Installer will utilize skilled workers holding a trade qualification license or equivalent or apprentices under the supervision of a licensed tradesperson.

1.7 REGULATORY REQUIREMENTS
A. Comply with all Federal, State, Local and Industry Codes and Ordinances

governing work of this contract.

1.8 DELIVERY STORAGE AND HANDLING

A. General. Comply with all Division 1 Product Requirement Section.

B. Delivery. Deliver materials in manufacture's original, unopened, undamaged containers with identification labels intact until ready for installation.

C. Storage and Protection.

1. Store materials protected from exposure to harmful environmental conditions and at temperature and humidity conditions recommended by the manufacturer.

2. Store PEX tubing indoors, in cartons or under cover to avoid dirt or foreign material from entering the tubing.

3. Do not expose PEX tubing to direct sunlight for more than six months. If construction delays are encountered, cover the tubing that is exposed to direct sunlight.

1.9 WARRANTY

A. Project Warranty. Refer to Conditions of the Contract for project warranty provisions.

B. Manufacturer's Warranty.

1. Shall cover the repair or replacement of properly installed tubing and fittings proven defective as well as incidental damages.

2. Warranty period for PEX tubing and subsequent system shall be 25 year non-prorated warranty against failure due to defect in material or workmanship, beginning with the date of installation.

3. It is the installer's responsibility to avoid mixing fittings manufactured by others as it will reduce the owner's warranty.

PART 2 - PRODUCTS

2.1 MANUFACTURERS

A. Hot and Cold Potable Water Distribution System Piping. All components of the potable water system piping systems, including all terminations, connections and controls shall be manufactured, supplied and/or approved for use by a single manufacturer.

1. Zurn PEX Inc.
2. Uponor.
3. Viega.
4. Approved Substitute.

B. Fittings and Related Components. All fittings, manifolds and terminations shall be manufactured by or sourced from a supplier approved by the manufacturer of the potable water piping.

2.2 INDIVIDUAL MATERIAL

A. Tubing.

1. Cross-linked polyethylene (PEX) manufactured by the Silane method.
2. Non-barrier type.

a) Shall have a pressure and temperature rating of 160 PSI at 73 F, 100 PSI at 180 F and 80 PSI at 200 F.
b) Tubing shall have a minimum of 6 months UV protection.

3. Manufactured in accordance with ASTM F876 and ASTM F877 and tested for compliance by an independent third-party agency.

B. Fittings. Manufactured in accordance with ASTM F1807 or ASTM F2159 and/or comply with ASTM F877 system standard as identified on the fitting.

C. Crimp Systems. Listed to ASTM F1807 and/or ASTM F877.

D. Manifold and Terminations. Shall be of the plastic or metal type, meeting the requirements of ASTM F877, identified as such with the appropriate mark on the product.

E. Valves. Shall be of the plastic or metal type, meeting the requirements of ASTM F877, identified as such with the appropriate mark on the product.

F. Tools. Approved for use on products supplied by the manufacturer of the potable water piping.

PART 3 - EXECUTION

3.1 EXAMINATION

A. Site Verification of Conditions.

1. Verify that site conditions are acceptable for the installation of the PEX potable water system.
2. Do not proceed with installations of the PEX potable water system until unacceptable conditions are corrected.

3.2 GENERAL

A. Manufacturer's Instructions. Comply with manufacture's product data, including product technical bulletins, technical memo's, installation instructions and design drawings, including; Zurn PEX Plumbing Installation Guide.

3.3 INSTALLATION

A. Install Pex tubing in accordance with tubing manufacturer's recommendations and as indicated in the Pex Plumbing Installation Guide.

B. Do not solder within 18 inches of Pex tubing in the same waterline. Make sweat connections prior to making Pex connections.

C. Ensure no glues, solvents, sealants or chemicals come in contact with the tubing without prior permission from the tubing manufacturer.

D. Do not expose Pex tubing to direct sunlight for more than 6 months.

E. Use a Pex manufacturer recommended fire stop sealant manufacturer.

F. Protect Pex tubing with sleeves where abrasion may occur.

G. Use nail plates where Pex tubing penetrates wall stud or joists and has the potential for being struck with a screw or nail.

H. Allow slack of approximately 1/8 inch per foot of tube length to compensate for expansion and contraction.

I. Minimum horizontal supports are to be installed not less than 32 inches between hangers in accordance with model plumbing codes and the Zurn Pex Plumbing Installation Guide.

J. Pressurize Zurn Pex tubing in accordance with applicable codes or in the absence of applicable codes, test pressure shall be at least equal to normal

system working pressure, but not less than 40 PSI water or air and not greater than 225 PSI water, 125 PSI air.

K. Refer to other sections listed in Related Sections paragraph herein for related products installation.

3.4 FIELD QUALITY CONTROL

A. Site Tests. To ensure system integrity, pressure test the system before covering tubing in concrete and/or other finish materials and after other trades have worked in the vicinity of the tubing.

B. Maintain system operating pressure on entire potable water system during installation of finish materials covering studs and/or cavities containing Pex piping. Repair and replace any product that has been damaged according to manufacturer's recommendation.

3.5 PROTECTION

A. Protect installed work from damage due to subsequent construction activity on the site.

END OF SECTION 221116

JEFFERSON COUNTY ENGINEERING DEPARTMENT
JCSO HANGAR BUILDING

SECTION 221316 - SOIL WASTE PIPING SYSTEMS

PART 1 - GENERAL

1.1 SECTION INCLUDES

A. Sanitary Soil Waste and Vent Piping System.

1.2 GENERAL

A. Use only the specified materials and procedures in fabricating the piping systems.
B. Extend and connect piping to all fixtures and equipment in the building as shown on the Drawings.
C. Mauriceville Municipal Utility District will locate a sanitary tap and provide the connection to the municipal sewer system. Coordinate with the Owner the location and flow line elevation of the sanitary tap.

1.3 REFERENCES

A. ANSI/ ASTM D 1784 - "Rigid Polyvinyl Chloride (PVC) Compounds and Chlorinated Polyvinyl Chloride (CPVC) Compounds.".
B. ANSI/ASTM D2729 - "Polyvinyl Chloride (PVC) Sewer Pipe and Fittings".
C. ASTM D2855 - "Practice for Making Solvent - Cemented Joints With PVC Pipe and Fittings".
D. ASTM D3033 & 3034- "PVC Sewer Pipe and Fittings”.
E. ASTM C564 - rubber gaskets for cast iron soil pipe and fittings.
F. CISPI No.301 - "Cast Iron Soil Pipe and Fittings for Hubless Cast Iron Sanitary System".
G. ANSI/ ASTM D 1784 - "Rigid Polyvinyl Chloride (PVC) Compounds and Chlorinated Polyvinyl Chloride (CPVC) Compounds".
H. ASTM D2855 - "Practice for Making Solvent - Cemented Joints with PVC Pipe and Fittings".

1.4 QUALITY ASSURANCE

A. Test all piping systems for leaks using procedures and standards required by governing codes and authorities.
B. Test all new piping back to the connection of the existing source.

1.5 REGULATORY REQUIREMENTS

A. All piping systems to be installed in accordance with applicable Federal, State and Local governing regulations and codes.

1.6 DELIVERY, STORAGE and HANDLING

A. Protect all materials during handling and storage to avoid damage.

PART 2 - PRODUCTS

2.1 MANUFACTURERS

A. Sanitary Soil Waste and Vent Piping System:
   1. Soil, waste and vent piping underground, below building slab and above grade inside the building (outside limits of return air plenum areas) to be schedule 40 PVC pipe with drainage pattern fittings and solvent welded joints.
   2. Soil, waste and vent piping above grade within limits of return air plenum areas to be service weight cast iron hub and spigot soil pipe and fittings. Make joints with positive, double seal, compression-type gaskets, or, hubless cast iron soil pipe and fittings with no hub-coupling joints.
   3. Reference drawings for limits of return air plenum areas.

B. Municipal Utility Extensions: Provide schedule 40 PVC pipe and fittings with solvent-welded joints for all underground domestic water piping from water main to the meter.

PART 3 - EXECUTION

3.1 INSTALLATION - GENERAL

A. Protect interior of pipe and fittings during installation to prevent debris from entering the system.

B. Do not install piping in water-filled trenches or when trench or weather conditions are unsuitable.

C. Leave joints exposed for examination during testing.

D. Install the various piping systems using procedures and methods in accordance with the Manufacturer's instructions.

E. Cutting and patching of existing concrete building slabs and existing exterior concrete or asphalt paving to accommodate installation of new piping systems is to be provided/performed by the plumbing systems installer.

F. Use only factory made fittings of same material as the pipe and approved by the pipe Manufacturer.

3.2 INSTALLATION - PVC PIPING

A. Join piping by solvent welding, using solvent and procedures as recommended by the Manufacturer.

B. Verify all systems are completely installed, unobstructed and free of all debris.

3.3 TESTING AND CERTIFICATION

A. Provide the following minimum testing procedures.

B. Sanitary Sewer Piping System:
   1. Test by filling with water, full to the top of the highest stub-up or stack and held so for 24 hours.
   2. After completion of the test, but prior to Substantial Completion, pass a plumber's rod through the entire new and existing system to verify system is free of obstruction and debris.

C. Immediately correct all leaks by replacing defective materials and connections and repeat tests until leaks are eliminated.

D. Provide written certification that the piping systems have been tested using the specified procedures and that test results indicate no leaks exist in the system.
   1. Insert copies of certification in the Owner's Manuals.

END OF SECTION 221316

JEFFERSON COUNTY ENGINEERING DEPARTMENT
JCSO HANGAR BUILDING

SECTION 224213 - PLUMBING FIXTURES AND TRIM

PART 1 - GENERAL

1.1 SECTION INCLUDES

A. Plumbing Fixtures and Trim.

1.2 SUBMITTALS

A. Submit manufacturer's printed product data for all fixtures, trim and appurtenances.
B. Submit manufacturer's installation instructions.

PART 2 - PRODUCTS

2.1 MATERIALS SUPPLIERS

A. Plumbing fixtures, faucets and trim.
   1. Eljer.
   2. American Standard.
   3. Bradley.
   4. Chicago.
   5. Crane.
B. Supplies, stops and tubular chromed brass.
   1. Eljer.
   2. American Standard .
   3. Bradley.
   4. Chicago.
   5. Crane.
   6. McGuire.
C. Supports and Carriers:
   1. Wade
   2. Smith
   3. Zurn
   4. Church
   5. Beneke
   6. Eljer

PART 3 - EXECUTION

3.1 EXAMINATION

A. Verify exact location and placement of fixtures with actual job conditions and make adjustments necessary to conform with architectural features, symmetry and cabinet/counter arrangements.
B. Coordinate fixtures mounted in cabinets with millwork shop drawings.
   1. Confirm all requirements before rough in and installation.
   2. Resolve discrepancies between actual requirements and catalog

references at time of shop drawing submission.

3.2 GENERAL

A. Install and connect all plumbing fixtures and required trim to the building waste, soil,
vent and water supplies.
B. Furnish all required trim, and appurtenances for a complete and operational installation.
C. Clean and disinfect all fixtures upon completion of the installation.

3.3 INSTALLATION

A. Mount all fixtures in accordance with manufacturer's requirements.
B. Provide wall hung fixtures fastened with through bolts and back plates.
C. Provide wall hung lavatories with anchor bolts on underside of backsplash.
D. Provide brass or chrome plated toggle bolts to tightly secure fixtures.

3.4 SCHEDULES

A. Plumbing fixtures and trim are scheduled on the drawings and represent the overall quality of fixtures, trim and supports.

END OF SECTION 224213

JEFFERSON COUNTY ENGINEERING DEPARTMENT
JCSO HANGAR BUILDING

SECTION 230100 - GENERAL MECHANICAL REQUIREMENTS

PART 1 - GENERAL

1.1 SCOPE OF WORK

A. Mechanical and Plumbing Systems are included. Provide all additional engineering necessary to finalize orders for equipment and fixturing. Design of all systems and components shall meet general industry standards common to the region, along with the 2012 International Building Code, the 2012 International Mechanical Code and the 2012 International Plumbing Code.

1.2 SECTION INCLUDES

A. General Requirements.
B. Contractor qualifications.
C. Coordination with other trades.
D. Materials and Workmanship.
E. Quality Assurance.
F. Delivery, Storage and Handling.
G. Drawings and Specifications.
H. Locations and Elevations of Municipal Utilities.
I. Submittals.
J. Regulatory Requirements.
K. Drawings and Specifications.

1.3 RELATED SECTIONS

A. Drawings and general provisions of Contract, including General and Supplementary Conditions and Division-1 Specification sections, apply to work of this Section.
B. Division 23 - Mechanical Specifications.
C. Division 26 - Electrical Specifications.

1.4 GENERAL REQUIREMENTS

A. Refer to other Divisions of the specifications for the scope of required connections to equipment furnished under that Division. Determine from the Contractors for the various trades and by direction from the Owner the exact location of all items. The Contractors involved will furnish all roughing-in drawings and piping diagrams required for proper installation of the mechanical work.

1.5 CONTRACTOR QUALIFICATIONS

A. Qualifications: The Contractor shall provide qualified workers trained and experienced in executing work of the various sections and shall submit documentation of five (5) consecutive years of work of this type. A list of similar projects shall be provided identifying when, where, and for whom the work was done.
B. Provide evidence of having contracted for and installed systems of comparable size and type to the systems specified herein. Systems submitted as previous experience shall have served their Owners satisfactorily for not less than 3 years.

1.6 COORDINATION WITH OTHER TRADES

A. Coordinate work of the various mechanical sections with the work of other trades and conditions of the Project and other divisions of work. Cooperate and coordinate with other divisions of work to provide a complete and functioning system in accordance with the Project Documents. Notify Owner of conflicts in ample time to prevent unwarranted changes in any work.

B. Provide coordination drawings of any and all systems necessary for coordination with other divisions of work.

C. Request all shop drawings and product data in ample time to permit proper installation of the systems and to prevent unwarranted delays in the Project construction schedule.

D. Stub up and protect open ends of pipe before enclosed by work of other divisions.

E. Coordinate sizes of required equipment pads Coordinate and locate all bolts and fittings required to be cast in them.

F. Coordinate electrical requirements of all mechanical equipment with Division 16.

1.7 MATERIALS AND WORKMANSHIP

A. All materials and equipment shall be new and of best grade and quality, provided by reputable manufacturers regularly engaged in the production of such materials and equipment.

B. Work shall be executed and all materials installed in accordance with the best practice of the trades in a thorough, workmanlike manner by competent workmen, presenting a neat appearance when completed.

C. With exceptions as specified and/or indicated on the Drawings; install, connect, erect, use, clean and condition manufactured articles, materials and equipment per Manufacturer's current printed instructions and recommendations.

D. The design is based on the equipment scheduled. Items furnished by Manufacturers other than those named in the Specifications shall have prior approval of the Owner.

E. Materials and equipment shall be new and in good condition. The commercially standard items of equipment, and the specified names mentioned herein are intended to identify standards of quality and performance necessary for the proper functioning of the work. Since manufacturing methods vary, reasonable minor variations are expected; however, performance and material requirements are the minimum standard selections other than those scheduled.

F. Continuously maintain quality control over supervision, sub-contractors, materials, equipment and workmanship to produce work in accordance with the Contract Documents.

1.8 QUALITY ASSURANCE

A. Factory-assembled equipment (excluding plumbing fixtures, nonferrous or galvanized items and other items specified or scheduled to have specific finish) shall be delivered with a factory applied finish such as baked on machinery enamel which does not require additional field painting.

B. Factory finishes that become marred, stained or otherwise damaged shall be restored.

C. Should any of the special factory applied coatings be damaged during handling,

storage or installation, the damaged areas shall be recoated in the field using the same surface preparation and coating system originally applied by the manufacturer.

D. All changes due to poor workmanship and/or coordination shall be made without additional expense to the Owner.

1.9 DELIVERY, STORAGE and HANDLING

A. Protect all materials and equipment to be installed under this Division from physical and weather damage. Work under this division shall include:
   1. Shipping from point of manufacture to job site.
   2. Storage on-site as required.

1.10 DRAWINGS AND SPECIFICATIONS

A. Mechanical Drawings are diagrammatic and shall be followed as closely as the actual construction will permit.

B. Should changes in work be required to make work specified in this Division conform to the Project as it is constructed or to make it conform with requirements of governing Codes and authorities: Submit request for direction before proceeding with work.

C. Relocation of equipment and systems installation of up to 3 feet both vertically and horizontally from the position indicated on the drawings may be directed without additional cost.

1.11 LOCATIONS AND ELEVATIONS OF MUNICIPAL UTILITIES

A. Locations and elevations of utilities indicated on the drawings have been obtained from utility maps and other substantially reliable sources and are offered only as a general guide for coordination, without guarantee as to accuracy.

B. Prior to excavation for new work, field verify all locations and elevations of utilities and their relation to new work.

C. Coordinate with the various utility companies connections to utility mains.

1.12 SUBMITTALS

A. Submit shop drawings, coordination drawings and product data for all materials and equipment.

B. Employ the procedures of submittals processing as described in other Sections of the Specifications.

1.13 REGULATORY REQUIREMENTS

A. Comply with the most recent versions of all applicable laws, rules, regulations, and ordinances of all governing Codes and Authorities.

B. Modifications required by the above said authorities shall be made without additional charge to the Owner.

C. Where alterations to and deviations from the Contract Documents are required by said authority, report the requirements and secure approval before starting work.

D. Where Contract Document requirements are in excess of code requirements and are permitted under the code, the Contract Documents shall govern.

PART 2 - PRODUCTS

Not Used

PART 3 - EXECUTION

Not Used

END OF SECTION 230100

JEFFERSON COUNTY ENGINEERING DEPARTMENT
JCSO HANGAR BUILDING

SECTION 230198 - OWNER'S OPERATING AND MAINTENANCE MANUALS

PART 1 - GENERAL

1.1 SECTION INCLUDES
A. Maintenance manuals.

1.2 RELATED SECTIONS
A. Drawings and general provisions of Contract, including General and Supplementary Conditions and Division-1 Specification sections, apply to work of this Section.
B. Division 23 - Mechanical Specifications.
C. Division 26 - Electrical Specifications.

1.3 GENERAL
A. Manuals to include product and equipment data and related information necessary for the Owner's maintenance and operation of all products and systems provided in the Contract.

1.4 CONTENTS OF MANUAL
A. Provide the following information, neatly typewritten in the front of each manual or each volume of the manual. Provide more than one binder as required:
   1. Table of contents identifying each product or item required to be included; indexed to content of the volume.
   2. Project Directory indicating division and / or section of work responsibility for each contractor and subcontractor listed.
      a) Name of Business.
      b) Responsible principal.
      c) Physical address.
      d) Telephone Number.
      e) Facsimile Telephone Number.
   3. Provide cross referenced listing of products installed with the name, address and telephone number of the manufacturer/supplier along with name of installing contractor.
   4. Provide index tabs separating each product or item of equipment required
   5. Arrange in order as indicated in the typed Table of Contents.

1.5 SUBMITTALS
A. Preliminary review copy of completed Table of Contents.

1.6 SUBMITTAL REVIEW PROCEDURE FOR MANUALS
A. Submit to the Owner, three copies of the Manual in final form, one day after final inspection.
B. The Contractor will be notified of any omissions or deviations requiring corrections.
C. Corrections will be made by the Contractor in the office of the Owner. Manuals will not be re-transmitted.

1.7 FORM FOR MANUALS
A. Prepare in the form of an instructional manual for use by Owner.
B. Format and media.

1. Insert all material in commercial quality 3-ring binders.
2. Label cover of binder “Owner’s Manual" with Project title.
3. When multiple binders are used, catalog contents into related, consistent groupings and identify on front cover of binders.
4. Provide all required text, typewritten on 81/2" x 11" white, commercial bond paper.
5. Fold larger drawings to size of text pages and insert in pre-punched folder with reinforced binders.
6. Index tabs to be the flyleaf type with typed identification of product on tab.

PART 2 - PRODUCTS

Not Used

PART 3 - EXECUTION

3.1 PRODUCT AND EQUIPMENT DATA

A. Include only information that is pertinent to the specific product or item of equipment.

B. Annotate each sheet to identify the specific product or item installed.
   1. Clearly identify all data applicable to installation.
   2. Delete references to inapplicable information.

C. Supplement product data with written text and/or drawings as necessary to clearly illustrate required maintenance and operation of products in the systems.
   1. Indicate relations or component parts of equipment and systems.
   2. Provide drawings illustrating control and flow diagrams.

D. Contents for each product and unit of equipment shall include.
   1. Complete list and commercial numbers of replaceable parts. Function of equipment, normal operating characteristics and limiting conditions.
   2. Procedures for start-up, break-in, control during normal operation and stopping.
   3. Emergency shut-down instructions.
   4. Special operating instructions.
   5. Routine maintenance based on operating hours.
   6. Manufacturer's operating and maintenance instructions.
   7. Manufacturer's guide to trouble shooting and repair.
   8. Lubrication requirements and types of lubricants recommended.
   9. Schedule of filters for each type of fan coil unit.
   10. Complete equipment internal wiring diagrams.

E. Provide Control's Manufacturer's written sequence of Operations along with as-installed control diagrams.

F. Provide copies of all warranties, bonds and service contracts.
   1. Indicate procedures in event of failures.
   2. Indicate conditions that may afford the validity of warranties or bonds.

G. Prepare warranties using the same phraseology as the Specifications.

H. Indicate the starting warranty date for each warranted item.

I. Provide any and all additional information as necessary to provide the Owner with a complete understanding of the products, equipment and system's furnished in the contract.

J. Provide signed copies of all specified certifications of testing.

3.2 OWNER'S INSTRUCTION

A. Prior to the final inspection of the Project, provide an on-site training session with the Owner's personnel to explain systems and instruct on proper operating and maintenance.

B. Schedule date and time of training session with the Owner's authorized personnel.

C. Allocate a minimum of two consecutive eight-hour days for training session.

1. Provide training during the Owner's regular working hours unless instructed otherwise by the Owner.

D. Use the Owner's Manual as a basis of instruction and to familiarize the Owner with contents and order of manuals.

E. Demonstrate to the Owner: start-up, operation, shutdown and maintenance of the installed systems and equipment.

F. At conclusion of the training session, have the attending Owner's personnel sign a certificate to certify:

1. That he has been adequately instructed in the systems.
2. That all demonstrations have been conducted successfully.
3. That content of Owner's manuals were reviewed and used as the basis of instruction.

G. Insert a copy of the certificate in each of the Owner's Manuals.

END OF SECTION 230198

JEFFERSON COUNTY ENGINEERING DEPARTMENT
JCSO HANGAR BUILDING

SECTION 230199 - CORRECTIONS AND MAINTENANCE DURING THE WARRANTY PERIOD

PART 1 - GENERAL

1.1 SECTION INCLUDES

A. Warrantee Period.
B. Corrections.
C. Routine Maintenance.
D. Quality Assurance.

1.2 RELATED SECTIONS

A. Drawings and general provisions of Contract, including General and Supplementary Conditions and Division-1 Specification sections, apply to work of this Section.
B. Division 23 - Mechanical Specifications.
C. Division 26 - Electrical Specifications.

1.3 WARRANTY PERIOD

A. The Guarantee and Warranty period is for 12 months after Substantial Completion of the Project.

1.4 CORRECTIONS

A. The Owner will notify the Contractor of any failure or observed defects in the system during this period.
B. Corrections to the work during this period and during regular working hours shall be at no additional cost to the Owner.
C. Response time shall be no longer than the day following the call from the Owner..
D. During this period, emergency service shall be available to the Owner on a 24 hour everyday basis..
E. Overtime work, if requested by the Owner, shall be reimbursed at the difference between regular and premium labor at the Contractor's current standard hourly billing rate for contract customers.
F. Procedures for corrections are as follows:
    1. Prior to commencing corrections, determine from the Owner any special requirements necessary to conform to his established policy for work on premises.
    2. When the service technician arrives at the Project, notify the Owner's authorized representative.
    3. Upon completion of the corrective work, file a signed copy of the service report with the Owner’s authorized representative.
    4. If corrective work requires more than one day to complete, notify the Owner and provide an estimate of the completion date.

1.5 ROUTINE MAINTENANCE

A. During the warranty period, provide normal maintenance service recommended by the Manufacturer at no additional cost to the Owner.

1.6 QUALITY ASSURANCE

A. Maintenance: Personnel specializing in maintenance of the products required and/or specified in this section with minimum three years documented experience.

PART 2 - PRODUCTS

None Used

PART 3 - EXECUTION

None Used

END OF SECTION 230199

JEFFERSON COUNTY ENGINEERING DEPARTMENT
JCSO HANGAR BUILDING

SECTION 230529 - SUPPORTS, SLEEVES and HANGERS

PART 1 GENERAL

1.1 SECTION INCLUDES

A. General Requirements.
B. References.
C. Quality Assurance.
D. Regulatory Requirements.

1.2 RELATED SECTIONS

A. Drawings and general provisions of Contract, including General and Supplementary Conditions and Division-1 Specification sections, apply to work of this Section.
B. Division 23 - Mechanical Specifications.
C. Division 26 - Electrical Specifications.

1.3 GENERAL REQUIREMENTS

A. All equipment and piping shall be installed in a neat and workmanlike manner by skilled
mechanics having prior experience in installing such systems.
B. Adhere to the general routing of the piping systems as shown on drawings.
C. Coordinate exact location and routing of the piping systems with all elements of the
building construction to avoid conflicts with use of building space.
D. Install piping systems in the most direct manner, adjacent walls and structures to occupy
the minimum of space while maintaining adequate space and clearance for:
1. Installation of pipe insulation.
2. Adjustment of pipe hangers.
3. Access to valves and other appurtenances in the piping systems.
4. Expansion and contraction without stressing pipe, pipe joints and connections to equipment.
E. Excessive vibration or noise levels in the piping systems caused by improper or inadequate suspension, support or connection is not acceptable.

1.4 REFERENCES

A. MSS SP-89 Pipe Hangers and Supports - “Fabrication and Installation Practices”.
B. MSS SP-89 Pipe Hangers and Supports - “Materials, Design and Manufacturer”.

1.5 QUALITY ASSURANCE

A. Installation: Company specializing in installation of the products required and/or specified in this section with minimum three years documented experience.

1.6 REGULATORY REQUIREMENTS

A. Comply with all federal, state and local codes and ordinances relating to installation of sleeves and pipe hangers.

PART 2 - PRODUCTS

2.1 INDIVIDUAL MATERIAL

B. Hanger types:

1. Malleable iron or carbon steel swivel, split ring type.
2. Carbon steel, adjustable clevis.

PART 3 - EXECUTION

3.1 EXAMINATION

A. Verify adequacy of backing and support framing.

B. Verify mechanical, electrical, and building items affecting work of this section are placed and ready to receive this work.

3.2 INSTALLATION

A. Set and secure materials and components in place, plumb and level.

B. Install hardware in accordance with manufacturer's instructions.

3.3 GENERAL SECURING, SUPPORTING AND SUSPENDING OF PIPING AND EQUIPMENT

A. Secure and suspend piping and equipment from the building structure by approved hangers and supports, installed in a manner to prevent excessive stress and vibration transmission.

B. All components of the hanger and support assemblies to be electro-galvanized with galvanized or cadmium plated threaded rods, nuts and hangers.

C. Fasten hanger rods to the building structure with beam fasteners compatible with structural members and conditions.

D. Perforated strap shall not be used as hanger material.

E. Hanger types for pipe sizes as follows:

1. 1/2" to 2" - malleable iron or carbon steel swivel, split ring type.
2. 1/2" to 6" - carbon steel, adjustable clevis.

F. Where trapeze hangers are used to suspend multiple pipes; provide rods sized for largest pipe on hanger.

G. Maximum horizontal single pipe support/hanger spacing.

H. Where multiple pipes are suspended/supported on common hangers or supports; provide spacing as required for smallest pipe on hanger/support.

I. Reference drawing details for additional support and hanger requirements.

J. Submit special types of sleeves, escutcheons plates, hangers, supports, framing and attachment methods where required for particular conditions.

3.4 PIPE HANGERS and SUPPORTS

A. Install hangers and supports to provide a minimum of 1/2 inch between finished covering and adjacent work.

B. Provide hangers within 12 inch of each horizontal elbow.

C. Support riser piping independently of connected horizontal piping.

D. Use hangers with minimum 1 1/2 inch vertical adjustment.

E. Provide multiple or trapeze hangers where several pipes can be installed parallel

and at the same elevation. Size hangers to accommodate piping and conduits where shown on the drawings or required for operation of equipment.

F. Wall supports: Provide as required and/or as noted and/or detailed on drawings.

G. Vertical supports: Provide steel riser clamps at at maximum of every other floor penetration.

H. Horizontal supports: Provide as required and/or as noted and/or detailed on drawings.

I. Trapeze hangers: Provide galvanized steel channels or galvanized uni-strut steel channels with galvanized hanger rods and clamps and/or anchorage supports.

J. Copper pipe hangers: Provide adjustable copper plated carbon steel ring hangers sized for copper piping. Sheet lead packing between hanger and piping may be used in lieu of copper plated hangers.

3.5 PIPE SLEEVES AND ESCUTCHEONS

A. Provide formed stainless steel or cast brass escutcheon plates where piping penetrations are exposed to view on exterior wall surface and interior unoccupied spaces.
   1. In finished interior spaces exposed to view, provide nickel-brass or chrome plated escutcheons.
   2. Secure all escutcheons to pipe with tamper-proof set screws.

B. Provide sleeves:
   1. Where piping penetrates concrete or masonry construction.
   2. Where required to accommodate installation of piping after completion of other work.
   3. Where vibration, expansion and contraction may affect finished surfaces penetrated by pipe.
   4. All other places shown on the drawings.
   5. Where required for compliance with codes and ordinances.

C. Sleeves shall be adequately sized to allow for:
   1. Application of the specified insulation types and thicknesses; continuous through the sleeve.
   2. Movement due to expansion and contraction.

D. Do not permit the pipe/pipe insulation to touch the wall of the sleeve.

E. Penetrations through exterior walls:
   1. Provide schedule 40 PVC pipe sleeves. Terminate sleeves flush with finished surface of wall.
   2. Seal annular space with butyl rubber sealant.

F. Penetrations through fire rated partitions.
   1. Provide schedule 40 galvanized steel pipe sleeves. Terminate sleeves as required to maintain partition rating.
   2. Seal annular with fire retardant silicone foam.

G. Penetrations through non-fire rated partitions that terminate and seal at deck.
   1. Provide schedule 40 galvanized steel pipe sleeves. Terminate sleeves flush with finished surface of wall.
   2. Pack annular space with 1 lb. density fiberglass insulation.

END OF SECTION 230529

JEFFERSON COUNTY ENGINEERING DEPARTMENT
JCSO HANGAR BUILDING

SECTION 233400 - HVLS CEILING FAN

PART 1 - GENERAL

1.1 SUMMARY

A. Section Includes

1. The ceiling-mounted, circulation fan is the model scheduled with the capacities indicated. The fan shall be furnished with standard mounting hardware and variable speed control to provide cooling and destratification.

B. Summary of Work

1. Installation of the fan, miscellaneous or structural metal work (if required), field electrical wiring, cable, conduit, fuses and disconnect switches, other than those addressed in the installation scope of work, shall be provided by others. Factory installation services are available through Big Ass Fans. Consult the appropriate installation scope of work for information on the available factory installation options, overview of customer and installer responsibilities, and details on installation site requirements.

1.2 REFERENCES

A. National Fire Protection Agency (NFPA)
B. Underwriters Laboratory (UL)
C. Restriction of Hazardous Substances (ROHS)
D. International Organization for Standardization (ISO)
E. National Electrical Manufacturers Association (NEMA)

1.3 SUBMITTALS

A. Shop Drawings: Drawings detailing product dimensions, weight, and attachment methods.
B. Part 2 Product Data: Specification sheets on the ceiling-mounted fan, specifying electrical and installation requirements, features and benefits, and controller information.
C. Revit Files: File provided for architectural design
D. Installation Guide: The manufacturer shall furnish a copy of all operating and maintenance instructions for the fan. All data is subject to change without notice.
E. Schedule

1.4 QUALITY ASSURANCE

A. Certifications

1. The fan assembly, as a system, shall be ETL-certified and built pursuant to the guidelines set forth by UL standard 507 and CSA standard 22.2 No. 113.
2. The fan shall be compliant with NFPA 13—Standard for the Installation of Sprinkler Systems, NFPA 72— National Fire Alarm and Signaling Code, and NFPA 70-2011—National Electric Code (NEC).
3. Controllers shall comply with National Electrical Code (NEC) and Underwriters Laboratory (UL) standards and shall be labeled where required by code.

B. Manufacturer Qualifications
1. The fan and any accessories shall be supplied by Big Ass Fans, which has a minimum of ten (10) years of product experience.
2. ISO 9001-certified

1.5 DELIVERY, STORAGE, AND HANDLING
A. Deliver product in original, undamaged packaging with identification labels intact. The fan shall be new, free from defects, and factory tested.
B. The fan and its components must be stored in a safe, dry location until installation.

1.6 WARRANTY
A. The manufacturer shall replace any products or components defective in material or workmanship for the customer free of charge (including transportation charges within the USA, FOB Lexington, KY), pursuant to the complete terms and conditions of the Big Ass Fans Non-Prorated Warranty in accordance to the following schedule:

Item	Period of Coverage
Hub and airfoils	Lifetime (Parts)
Motor, gearbox, & controller	5 years (Parts); Prorated 6–12 years
All other fan components	5 years (Parts); Prorated 6–12 years
Labor	1 year

PART 2 - PRODUCT

2.1 MANUFACTURER
A. Delta T Corporation, dba Big Ass Fans,
PO Box 11307, Lexington, Kentucky 40575.
Phone (877) 244-3267.
Fax (859) 233-0139.
Website: www.bigassfans.com.
B. Approved Substitutes

2.2 HIGH VOLUME, LOW SPEED FANS – BIG ASS FANS POWERFOIL®8
A. Complete Unit
1. Regulatory Requirements: The entire fan assembly shall be ETL-certified and built pursuant to the construction guidelines set forth by UL standard 507 and CSA standard 22.2.
2. Sustainability Characteristics: The fan shall be designed to move an effective amount of air for cooling and destratification in industrial applications over an extended life. The fan components shall be designed specifically for high volume, low speed fans to ensure lower operational noise. Sound levels from the fan operating at maximum speed measured in a laboratory setting shall not exceed 55 dBA. Actual results of sound measurements in the field may vary due to sound reflective surfaces and environmental conditions.
3. Good workmanship shall be evident in all aspects of construction. Field

balancing of the airfoils shall not be necessary.

B. Airfoil System
   1. The fan shall be equipped with eight (8) Powerfoil airfoils of precision extruded aluminum alloy. The airfoils shall be connected by means of two (2) high strength locking bolts per airfoil. The airfoils shall be connected to the hub and interlocked with zinc plated steel retainers.
   2. The fan shall be equipped with eight (8) Powerfoil winglets on the ends of the airfoils and eight (8) AirFences™ positioned on the airfoils at the optimum location for performance. Both the winglets and AirFences shall be molded of polypropylene. The standard color of the winglet and AirFence shall be “Safety Yellow.”

C. Motor
   1. The fan motor shall be an AC induction type inverter rated at one of the following:
      a. 1725 RPM, 200–250/400–480 VAC, 50/60 Hz, three-phase
      b. 1725 RPM, 200–250 VAC, 50/60 Hz, single-phase
   2. The motor shall be totally enclosed, fan cooled (TEFC) with an IP56 NEMA classification. A NEMA 56C standard frame shall be provided for ease of service. The motor shall be manufactured with a double baked Class F insulation and be capable of continuous operation in -30°F to 122 ^{o}F ambient conditions.

D. Gearbox
   1. The gearbox shall be a helical gear reducer, precision finished from hardened steel for low noise and long service life with double lip seals to retain oil and prevent contamination. The gearbox shall be lubricated for life. The gear reducer shall have a standard backlash of less than 25 arc minutes and be equipped with a 17-4 stainless steel shaft of 1-1/4” diameter.

E. Motor Frame
   1. The motor frame and mount shall be constructed of steel and powder coated for corrosion resistance and appearance. Non-visible, steel, threaded rods in each structural member of the motor frame shall provide a redundant safety feature in the event of a catastrophic event.

F. Mounting System
   1. The fan mounting system shall be designed for quick and secure installation on a variety of structural supports. The mounting yoke shall be of ASTM A-36 steel, welded construction, at least 3/16” thick, and powder coated for appearance and corrosion resistance. No mounting hardware or parts substitutions, including cast aluminum, are acceptable.
   2. All mounting bolts shall be SAE Grade 8 or equivalent.

G. Hub
   1. The fan hub shall be made of laser cut aluminum for high strength and light weight. The hub shall consist of two aluminum plates, eight (8) aluminum spars and one (1) spacer fastened with a pin and collar rivet system.
   2. The hub shall be secured to the output shaft of the gearbox by means of a steel coupling interface. The hub shall incorporate four (4) safety retaining clips made of 1/4” (0.6 cm) thick steel that shall restrain the hub/airfoil assembly.

H. Safety Cable
   1. The fan shall be equipped with a safety cable that provides an additional means of securing the fan assembly to the building structure. The safety cable shall be at least 1/4" (0.6 cm) in diameter and fabricated out of 7 x 19 galvanized steel cable. The end loops shall be secured with swaged Nicopress® sleeves, pre-loaded and tested to 3,200 lbf.
   2. Field construction of safety cables is not permitted.

I. Variable Frequency Drive
   1. The fan controller shall be a NEMA 4X variable frequency drive (VFD) that is factory programmed to minimize starting and braking torques. The VFD shall have touchpad controls and an LED display for controlling the fan's direction, operation, speed, and programming. The VFD shall be equipped with an EMI/RFI filter to limit interference with other electronic equipment and a rotary switch disconnect for lockout/tag-out requirements.
   2. Wall Control: The VFD may be wall-mounted for ease of access.
   3. Onboard Control: The VFD may be mounted on the fan motor frame. A wall-mounted remote keypad shall be provided for such installations. The remote keypad shall be equipped with touchpad controls and an LED display providing access to all controller functions.

J. Fire Control Panel Integration
   1. Includes a 10–30 VDC pilot relay for seamless fire control panel integration. The pilot relay can be wired Normally Open or Normally Closed in the field.

K. Guy wires
   1. Included for installations with extension tubes 4 ft or longer to limit the potential for lateral movement.

PART 3 - EXECUTION

3.1 PREPARATION

A. Fan location must have a typical bar joist or existing I-beam structure from which to mount the fan. Additional mounting options may be available.
B. Mounting structure must be able to support weight and operational torque of fan. Consult structural engineer if necessary.
C. Fan location must be free from obstacles such as lights, cables, or other building components.
D. Check fan location for proper electrical requirements. Consult installation guide for appropriate circuit requirements.
E. Each fan requires dedicated branch circuit protection.

3.2 INSTALLATION

A. The fan shall be installed by a factory-certified installer according to the manufacturer's Installation Guide, which includes acceptable structural dimensions and proper sizing and placement of angle iron for bar joist applications. Big Ass Fans recommends consulting a structural engineer for installation methods outside the manufacturer's recommendation and a certification, in the form of a stamped print or letter, submitted prior to installation.
B. Minimum Distances

1. Airfoils must be at least 10 ft above the floor.
2. Installation area must be free of obstructions such as lights, cables, sprinklers or other building structures with the airfoils at least 2 ft clear of all obstructions.
3. The structure the fan is attached to shall be capable of supporting a torque load of up to 300 ft·lb.

C. The fan shall not be located where it will be continuously subjected to wind gusts or in close proximity to the outputs of HVAC systems or radiant heaters. Additional details are in the Big Ass Fans 3.2 Installation Manual.

D. In buildings equipped with sprinklers, including ESFR sprinklers, fan installation shall comply with all of the following:
1. The maximum fan diameter shall be 14 ft.
2. The HVLS fan shall be centered approximately between four adjacent sprinklers.
3. The vertical clearance from the HVLS fan to the sprinkler deflector shall be a minimum of 3 ft.

END OF SECTION 233400

JEFFERSON COUNTY ENGINEERING DEPARTMENT
JCSO HANGAR BUILDING

SECTION 238127 – DUCTLESS SPLIT-SYSTEM AIR-CONDITIONERS

PART 1 - GENERAL

1.1 SUMMARY

A. Section Includes:
   1. Fan Coil Unit.
   2. Condensing unit.

1.2 REFERENCES

A. Air-Conditioning and Refrigeration Institute:
   1. ARI 210/240 - Unitary Air-Conditioning and Air-Source Heat Pump Equipment.
   2. ARI 270 - Sound Rating of Outdoor Unitary Equipment.
   3. ARI 340/360 - Commercial and Industrial Unitary Air-Conditioning and Heat Pump Equipment.
   4. ARI 365 - Commercial and Industrial Unitary Air-Conditioning Condensing Units.

B. American Society of Heating, Refrigerating and Air-Conditioning Engineers:
   1. ASHRAE 52.1 - Gravimetric and Dust-Spot Procedures for Testing Air-Cleaning Devices Used in General Ventilation for Removing Particulate Matter.
   2. ASHRAE 90.1 - Energy Standard for Buildings Except Low-Rise Residential Buildings.

C. ASTM International:
   1. ASTM B117 - Standard Practice for Operating Salt Spray (Fog) Apparatus.

D. National Electrical Manufacturers Association:
   1. NEMA MG 1 - Motors and Generators.

E. National Fire Protection Association:
   1. NFPA 90A - Standard for the Installation of Air Conditioning and Ventilating Systems.

1.3 SUBMITTALS

A. Product Data: Submit data indicating:
   1. Cooling and heating capacities.
   2. Dimensions.
   3. Weights.
   4. Rough-in connections and connection requirements.
   5. Electrical requirements with electrical characteristics and connection requirements.
   6. Controls.
   7. Accessories.

B. Manufacturer's Installation Instructions: Submit assembly, support details, connection requirements, and include start-up instructions.

1.4 QUALITY ASSURANCE

A. Performance Requirements: Energy Efficiency Rating (EER) and Coefficient of Performance (COP) not less than prescribed by ASHRAE 90.1 when used in combination with compressors and evaporator coils when tested in accordance

with ARI Standards.

PART 2 - PRODUCTS

2.1 SPLIT SYSTEM AIR CONDITIONING UNITS

A. Product Description: Split system consisting of fan coil unit and condensing unit including cabinet, evaporator fan, refrigerant cooling coil, compressor, refrigeration circuit, condenser, air filters, controls, air handling unit accessories, condensing unit accessories, and refrigeration specialties.
B. Manufacturers:
   1. Mitsubishi.
   2. Daikin.
   3. Sanyo.
C. Refrigerants R-410A and R-407C.

2.2 FAN COIL UNIT

A. Cabinet:
   1. Panels: Constructed of galvanized steel with baked enamel finish.
   2. Access Panels: Located on both sides of unit. Furnish with duct collars on inlets and outlets.
   3. Insulation: Factory applied to each surface to insulate entire cabinet. One inch thick neoprene coated aluminum foil faced glass fiber with edges protected from erosion.
B. Evaporator Fan: Forward curved centrifugal type, resiliently mounted with adjustable belt drive and high efficiency motor. Motor permanently lubricated with built-in thermal overload protection.
C. Evaporator Coil: Constructed of copper tubes expanded onto copper fins. Factory leak tested under water. Removable, PVC construction, double-sloped stainless steel drain pan with piping connections on both sides. Coil shall be coated with minimum 1.0 mil. aluminum impregnated polyurethane coating by Blygold PoluAl XT or approved equal. Coating shall withstand 4,000 hours in both salt spray test per ASTM B117 and acid salt spray test per ASTM D5339.
D. Refrigeration System: Single or Dual refrigeration circuits controlled by factory installed thermal expansion valve. Refrigerant shall be R407C or R410A.
E. Air Filters: 1 inch thick glass fiber disposable media in metal frames. 25 to 30 percent efficiency based on ASHRAE 52.1.Unit shall be wall mounted, ceiling mounted, or ceiling cassette type (integral with grid).

2.3 CONDENSING UNIT

A. General: Factory assembled and tested air cooled condensing units, consisting of casing, compressors, condensers, coils, condenser fans and motors, and unit controls.
B. Unit Casings: Exposed casing surfaces constructed of galvanized steel with manufacturer's standard baked enamel finish. Designed for outdoor installation and complete with weather protection for components and controls, and complete with removable panels for required access to compressors, controls, condenser fans, motors, and drives.
C. Compressor: Single refrigeration circuit or two independent refrigeration circuits

with rotary or hermetic semi-hermetic reciprocating type compressors, resiliently mounted, with positive lubrication, and internal motor overload protection. Compressor shall five (5) year warranty.

D. Condenser Coil: Constructed of copper tubing mechanically bonded to copper fins, factory leak and pressure tested. Coil shall be coated with minimum 1.0 mil. aluminum impregnated polyurethane coating by Blygold PoluAl XT or approved equal. Coating shall withstand 4,000 hours in both salt spray test per ASTM B117 and acid salt spray test per ASTM D5339.

E. Controls: Furnish operating and safety controls including high and low pressure cutouts.

F. Control transformer. Furnish magnetic contactors for compressor and condenser fan motors.

G. Condenser Fans and Drives: Direct drive propeller fans statically and dynamically balanced. Wired to operate with compressor. Permanently lubricated ball bearing type motors with built-in thermal overload protection. Furnish high efficiency fan motors.

H. Condensing Unit Accessories: Furnish the following accessories:
   1. Controls to provide low ambient cooling to 0 degrees F.
   2. Time delay relay.
   3. Anti-short cycle timer.
   4. Disconnect switch.
   5. Vibration isolators.
   6. Hot gas bypass kit.
   7. Coil with corrosion resistant coating capable of withstanding salt spray test of 1000 hours in accordance with ASTM B117.
   8. Condenser Coil Guard: Condenser fan openings furnished with PVC coated steel wire safety guards.
   9. Suction and discharge pressure gauges.

I. Refrigeration specialties: Furnish the following for each circuit:
   1. Charge of compressor oil.
   2. Holding charge of refrigerant.
   3. Replaceable core type filter drier.
   4. Liquid line sight glass and moisture indicator.
   5. Shut-off valves on suction and liquid piping.
   6. Liquid line solenoid valve.
   7. Charging valve.
   8. Oil level sight glass.
   9. Crankcase heater.
   10 Hot gas muffler.
   11. Pressure relief device.

PART 3 - EXECUTION

3.1 INSTALLATION – FAN COIL UNIT

A. Install per manufacturer’s recommendations. Where appropriate, provide 2” deflection spring vibration isolators and seismic restraints.

B. Install condensate piping with trap and route from drain pan to approved receptor.

END OF SECTION 238127

JEFFERSON COUNTY ENGINEERING DEPARTMENT
JCSO HANGAR BUILDING

SECTION 260101 - BASIC ELECTRICAL REQUIREMENTS

PART 1 - GENERAL

1.1 SCOPE OF WORK

A. Electrical Systems are to be provided. Provide all additional engineering necessary to finalize orders for equipment and fixturing. Design of all systems and components shall meet general industry standards common to the region, along with the 2009 International Building Code and the 2008 National Electrical Code.

1.2 CONTRACTOR'S QUALIFICATIONS

A. An approved contractor for the work under this Division. A specialist in this field and have the personnel, experience, training and skill, and the organization to provide a practical working system.

1.3 RELATION WITH OTHER TRADES

A Carefully study all matters and conditions concerning the project. Submit notifications of conflict in ample time to prevent unwarranted changes in any work. Review other Divisions of these specifications to determine their requirements. Extend mechanical services and final connections to all items requiring it.

B Because of the complicated relationship of this work to the total project, conscientiously study the relation and cooperation as necessary to accomplish the full intent of the documents.

C Provide sleeves and inserts in forms as required or the work. Stub up and protect open ends of pipe before any concrete is placed. Furnish sizes of required equipment pads. Furnish and locate bolts and fittings required to be case in them.

D Locate and size openings required for installation of work specified I this Division in sufficient time to prevent delay in the work.

E Make final electrical connections to all electrically operated equipment.

F Request all Shop Drawings required in ample time to permit proper installation of equipment, piping, and appurtenances.

1.4 APPARATUS PROTECTION

A. Take all precautions necessary to protect the work from damage during handling and installation and until completion of construction. Failure to comply shall be sufficient cause for rejection of the work

1.5 NOISE AND VIBRATION

A. Eliminate any abnormal noises which are not considered to be an inherent part of the systems as designed. Abnormal bussing in equipment components will not be acceptable.

1.6 MATERIALS AND EQUIPMENT

A. All materials or equipment furnished for this work:
   1. New and delivered in undamaged original crate.

2. Plainly marked for identification.
3. Quality as specified.

1.7 FACTORY FINISH

A. Factory assembled equipment except nonferrous or galvanized items and other items specific or scheduled to have a specific finish:
B. Protect equipment from damage and defacement.
C. Factory finish that becomes marred, stained or otherwise damaged: Fully and satisfactorily restored.
D. Should any of the special factory applied coatings be damaged during handling, storage or installation, the damaged areas shall be recoated in the field using the same surface preparation and coating system originally applied by the manufacturer.

1.8 UTILITIES, LOCATIONS AND ELEVATIONS

A. Locations and elevations of the various utilities included within the scope of this work:
   1. Obtained from utility maps and other substantially reliable sources.
   2. Are offered separate from the Contract Documents as a general guide only, without guarantee as to accuracy.
B. Examine the site and verify the locations and elevations of all utilities and of their relation to the work

1.9 DRAWINGS AND SPECIFICATIONS

A. The Electrical Drawings:
   1. Are diagrammatic and shall be followed as closely as the actual construction will permit.
   2. Are not intended to show complete and accurate location of apparatus and appurtenances.
B. Should any changes be required to make work specified in this Division conform to the project as it is constructed or to make it conform with the rules of the authorities having jurisdiction, submit request for directions before proceeding with the work. All changes due to poor coordination make without additional expense to the Owner.
C. Exact locations of equipment and accessories in finished spaces:
   1. Determined by reference to specific details. When not specifically shown, locations of items to be approved prior to installation. Relocation before installation. Relocation from the position indicated on the Drawings may be directed without additional cost.

1.10 PERMITS AND REGULATIONS

A. Obtain all permits required.
B. Conform to applicable Federal, State and Local Ordinances and Codes.
C. Electrical work shall comply with applicable inspection services.
   1. Underwriter's Laboratories.
   2. National Fire Protection Association.
   3. State Health Department.
D. Where laws, codes or ordinances conflict with the specifications, then the laws, codes or ordinances govern.
E. In cases where the specifications exceed in quantity or quality of material or

labor, specifications shall be followed.

F. In cases of conflict, submit request for directions before proceeding.

1.11 UTILITY SERVICE

A. Provide all connections wiring, meters, outlets, sockets, and lamps for temporary electric power and lighting required during construction of the project.

B. Remove temporary equipment, facilities and materials prior to substantial completion.

C. Make arrangements with the utility sources and pay costs for the connections and changeovers for permanent electric service.

1.12 AVAILABLE SPACE

A. Size and shape of physical spaces for equipment shown on drawings has been designed in accordance with the types indicated and specified.

B. Equipment shall be selected to fit properly into such spaces.

C. Be arranged and positioned to permit access as required for maintenance, servicing, removal or replacement of parts and/or whole pieces of equipment.

1.13 ELECTROLYSIS ISOLATION

A. Provide continuous neoprene strip to separate dissimilar metals that could come into contact.

B. Provide dielectric couplings at instrument connections to piping mains.

END OF SECTION 260101

JEFFERSON COUNTY ENGINEERING DEPARTMENT
JCSO HANGAR BUILDING

SECTION 260102 - CORRECTIONS DURING THE WARRANTY PERIOD

PART 1 - GENERAL

1.1 SUMMARY

A. The warranty and guarantee period is for 12 months after substantial completion of the project.
B. The Owner will notify the contractor of any failure or observed defects in the system during this period.
C. Corrections to the work during this period and during regular working hours shall be at no cost to the Owner.
    1. Response time shall be no longer than the day following the call from the Owner.
D. Emergency service shall be available to the Owner on a 24 hour every day basis during this period.
E. Overtime work, if required by the Owner, will be reimbursed at the difference between regular and premium labor at the contractor's current standard hourly billing rate for contract customers.

1.2 PROCEDURES

A. Prior to commencing corrections during the warranty period determine from the Owner any special requirements required to conform to his established policy for work on his premises.
B. When the service technician arrives at the project to perform the corrective work, notify the Owner's authorized representative.
C. Upon completion of the corrective work, file a signed copy of the service report with the owners authorized representative.
D. If the corrective work requires more than one day to complete, notify the Owner and give an estimate of the completion date.

END OF SECTION 260102

JEFFERSON COUNTY ENGINEERING DEPARTMENT
JCSO HANGAR BUILDING

SECTION 260103 - OPERATING AND MAINTENANCE MANUALS

PART 1 - GENERAL

1.1 REQUIREMENTS INCLUDED

A. Compile product data and related information appropriate for Owner's maintenance and operation of products furnished under Contract.
B. Instruct Owner's personnel in maintenance and operation of equipment and systems.
C. Submit three copies of complete manual in final form.

1.2 FORM FOR MANUALS

A. Prepare data in form of an instructional manual for use by Owner's personnel.
B. Format:
   1. Size: 8-1/2 X 11 inches.
   2. Text: Manufacturer's printed data or neatly typewritten.
   3. Drawings:
      a. Provide reinforced punched binder tab and bind in text.
      b. Fold larger drawings to size of text pages.
   4. Provide flyleaf with indexed tabs for each separate product or each piece of operating equipment.

1.3 CONTENT OF MANUAL

A. Typewritten Table of Contents.
   1. Contractor, name of responsible principal, address and telephone number.
   2. List with each product, name, address and telephone number:
      a. Subcontractor or installer.
      b. Maintenance contractor as appropriate.
      c. Identify area of responsibility of each.
      d. Local source of supply for parts and replacement.
   3. Identify each product-by-product name and other identifying symbols as set forth in Contract Documents.
B. Product Data:
   1. Include only those sheets, which are pertinent to the specific product.
   2. Annotate each sheet to:
      a. Clearly identify specific product or part installed.
      b. Clearly identify data application to installation.
      c. Delete references to inapplicable information.
C. Printed listing of program statements.
D. Drawings:
   1. Supplement product data with drawings as necessary to clearly illustrate:
      a. Relations of component parts of equipment and systems.
      b. Control diagrams.
   2. Coordinate drawings with information in Project Record Documents to assure correct illustration of completed installation.
   3. Do not use Project Record Documents as maintenance drawings.

E. Copy of each warranty, issued.
F. Provide information sheet for owner's personnel, giving:
   1. Proper procedures in event of failure.
   2. Instances, which might affect validity of warrant.
G. Shop Drawings, Coordination Drawings and Product data as specified.

1.4 MANUAL OR EQUIPMENT AND SYSTEMS

A. Content, for each electric and electronic system, as appropriate:
   1. Description of system and component parts.
   2. Function, normal operating characteristics, and limiting conditions.
   3. Complete nomenclature and commercial number of replaceable parts.
   4. Copies of typed circuit directories of panel boards.
   5. As installed color-coded wiring diagrams.
   6. Operating procedures:
      a. Routine and normal operating instructions.
      b. Sequences required.
      c. Special operating instructions.
   7. Maintenance procedures:
      a. Routine operations
      b. Guide to "Trouble-shooting".
   8. Manufacturer's printed operating and maintenance instructions.

1.5 INSTRUCTION OF OWNER'S PERSONNEL

A. Provide to final inspection, conduct an on site training program to instruct the Owner's operating personnel in the operation and maintenance of the electrical systems.
B. Provide the training during the Owner's regular working day.
C. The Owner will provide a list of personnel to receive instructions, and will coordinate their attendance at the agreed upon times.
D. Use the operation and maintenance manuals as the basis of instruction. Review contents of manuals with personnel in detail to explain all aspects of operation and maintenance.
E. Demonstrate start-up, operation, control, adjustment, trouble-shooting, servicing, maintenance, and shutdown of each item of equipment.
F. Prepare and insert additional data in operations and maintenance manuals when needed or when additional data becomes apparent during instructions.
G. At the conclusion of the on site training program, have the person designated by the Owner, sign a certificate to certify that he has a proper understanding of the system, that the demonstrations and instructions have been satisfactorily completed.
H. Include the report and the certificate in an appropriately tabbed section for each manual.

END OF SECTION 260103

JEFFERSON COUNTY ENGINEERING DEPARTMENT
JCSO HANGAR BUILDING

SECTION 260104 - CONTRACT QUALITY CONTROL

PART 1 - GENERAL

1.1 REQUIREMENTS INCLUDED

A. General quality control.
B. Workmanship.
C. Manufacturer's Instructions.

1.2 QUALITY CONTROL PROGRAM

A. Maintain quality control over supervision, subcontractor's, suppliers, manufacturers, products, services, site conditions and workmanship to produce work in accordance with the contract documents.

1.3 WORKMANSHIP

A. Comply with industry standards except when more restrictive tolerances or specified requirements indicate more rigid standards or more precise workmanship.
B. Perform work by persons qualified to produce workmanship of specified quality.
C. Secure products in place with positive anchorage devices designed and sized to withstand stresses vibration and racking.

1.4 MANUFACTURER'S INSTRUCTIONS

A. Comply with instructions in full detail, including each step in sequence.
B. Should instruction conflict with Contract Documents, request clarification from Engineer before proceeding.

END OF SECTION 260104

JEFFERSON COUNTY ENGINEERING DEPARTMENT
JCSO HANGAR BUILDING

SECTION 260105 - SHOP DRAWINGS, COORDINATION DRAWINGS AND PRODUCT DATA

PART 1 - GENERAL

1.1 SUMMARY

A. Prepare submittal as required by the Contract Documents.
B. The term submittal, as used herein, refers to all:
   1. Shop drawings.
   2. Coordination drawings.
   3. Product data.
C. Submittals shall be prepared and produced for:
   1. Distribution as specified.
   2. Inclusion in the Operating and Maintenance Manual, as specified, in the related section.

1.2 SHOP DRAWINGS

A. Present drawings in a clear and thorough manner.
   1. Identify details by reference to sheet and detail, schedule, or room numbers shown on Contract Drawings.
B. Show all dimensions of each item of equipment on a single composite Shop Drawing. Do not submit a series of drawings of components.
C. Identify field dimensions, show relation to adjacent or critical features or work or products.

1.3 COORDINATION DRAWINGS

A. Present in a clear and thorough manner. Title each drawing with project name. Identify each element of drawings by reference to sheet number and detail, or room number of contract documents.
   1. Minimum drawing scale: 1/4” = 1’-0”.
B. Prepare coordination drawings to coordinate installations for efficient use of available space, for proper sequence of installation, and to resolve conflicts.
   1. Coordinate with work specified in other sections and other divisions of the specifications.
C. Identify field dimensions. Show relation to adjacent or critical features or work or products.

1.4 PRODUCT DATA

A. Submit only pages which are pertinent.
B. Mark each copy of standard printed data to identify pertinent products, referenced to specification section and article number.
C. Show reference standards, performance characteristics and capabilities, wiring diagrams and controls, component parts, finishes, dimensions and required clearances.
D. Modify manufacturer’s standard schematic drawings and diagrams to supplement standard information and to provide information specifically applicable to the work. Delete information not applicable.

1.5 MANUFACTURER'S INSTRUCTIONS

A. Submit Manufacturer's instructions for storage, preparation, assembly, installation, start-up, adjusting, calibrating, and finishing.

1.6 CONTRACTOR RESPONSIBILITIES

A. Review submittals prior to transmittal.

B. Determine and verify:

1. Field measurements.
2. Field construction criteria.
3. Manufacturer's catalog numbers.
4. Conformance with requirements of contract documents.

C. Coordinate submittals with requirements of the Work and of the Contract Documents.

D. Notify the Owner in writing at time of submission of any deviations in the submittals from requirements of the contract documents.

E. Do not fabricate products, or begin work for which submittals are specified, until such submittals have been produced and bear Contractor's stamp.

F. Do not fabricate products or begin work schedule to have submittals reviewed, until return of reviewed submittals with Owner's acceptance.

G. Contractor's responsibility for errors and omissions in submittals is not relieved whether Owner reviews submittals or not.

H. Contractor's responsibility for deviations in submittals from requirements of Contract Documents is not relieved whether Owner reviews submittals or not, unless Owner gives written acceptance of the specified deviations on reviewed documents.

I. Submittals shall show sufficient data to indicate complete compliance with Contract Documents:

1. Proper sizes and capacities.
2. That the item will fit in the available space in a manner that will allow proper service.

J. Where located outdoors, will not infringe upon sight lines.

K. Construction methods, materials and finishes.

L. Schedule submissions at least 15 days before date reviewed submittals will be needed.

1.7 SUBMISSION REQUIREMENTS

A. Make submittals promptly in accordance with approved schedule, and in such sequence as to cause no delay in the Work or in the work of any other Contractor.

B. Accompany submittals with transmittal letter, duplicate, containing:

1. Date
2. Project title and number

3. Contractor's name and address
4. The number of each Shop Drawing and Project Datum.
5. Other pertinent data.

C. Submittals shall include:
1. The date of submission.
2. The project title and number.
3. Contract identification.
4. The names of:
a. Contractor.
b. Subcontractor.
c. Supplier.
d. Manufacturer.
5. Identification of the product.
6. Field dimensions, clearly identified as such.
7. Relation to adjacent or critical features of the work or materials.
8. Applicable standards, such as ASTM or federal specifications numbers.
9. Identification of deviations from contract documents.
10. Suitable blank space for Contractor stamps.
11. Contractor's signed and dated Stamp of Approval.
12. Associated items, which require correlation for efficient function or for installation.

D. Coordinate submittals into logical groupings to facilitate interrelation of the several items.

1.8 SUBMITTAL SPECIFICATION INFORMATION

A. Every submittal document whether identified to be reviewed by the Owner or not, shall bear the following information as used in the project manual:
1. The related specification section number.
2. The exact specification section title.

B. Submittals delivered to the Owner without the specified information will not be processed.

C. The Contractor shall bear the risk of all delays, as if no submittal had been delivered.

1.9 RESUBMISSION REQUIREMENTS

A. Make resubmittals under procedures specified for initial submittals.
1. Indicate that the documents are a resubmittal.
2. Identify changes made since previous submittals

B. Indicate any changes that have been made other than those requested by the Owner.

1.10 CONTRACTOR'S STAMP OF APPROVAL

A. Contractor shall stamp and sign each document certifying to the review of products, field measurements and field construction criteria, and coordination of the information within the submittal with requirements of the work and of Contract Documents.

B. Contractor's stamp of approval on any submittal shall constitute a representation to Owner that Contractor has either determined and verified all quantities, dimensions, field construction criteria, materials, catalog numbers, and similar data or assumes full responsibility for doing so, and that Contractor has reviewed or coordinated each submittal with the requirement of the work and the Contract Documents.

C. Do not deliver any submittals to the Owner that do not bear the Contractor's stamp of approval and signature.

D. Submittals delivered to the Owner without Contractor' s stamp of approval and signature will not be processed.

E. The Contractor shall bear the risk of all delays, as if no submittal had been delivered.

1.11 SUBSTITUTIONS

A. Do not make requests for substitution employing the procedures of this Section.

END OF SECTION 260105

JEFFERSON COUNTY ENGINEERING DEPARTMENT
JCSO HANGAR BUILDING

SECTION 260106 - PROJECT RECORD DOCUMENTS

PART 1 - GENERAL

1.1 REQUIREMENTS INCLUDED

A. Maintain at the site for review by the Owner one record copy of:
   1. Drawings.
   2. Specifications.
   3. Addenda.
   4. Change orders and other modifications to the contract.
   5. Field orders or written instructions.
   6. Approved shop drawings and product data.
   7. Field test records.

1.2 MAINTENANCE OF DOCUMENTS

A. Store documents apart from documents used for construction.
B. Maintain documents in a clean, dry, legible condition and in good order.
   1. Do not use record documents for construction purposes.
C. Make documents available at all times for inspection by Owner.

1.3 MARKING DEVICES

A. Provide red felt tip marking pens for recording information

1.4 RECORDING

A. Label each document “Project Record" in neat, large printed letters.
B. Record information concurrently with construction progress.
   1. Do not conceal any work until required information is recorded.
C. Legibly mark Record Drawings to record actual construction:
   1. Depths of various buried elements in relation to finish first floor datum.
   2. Horizontal and vertical locations of underground utilities and appurtenances, referenced to permanent surface improvements.
   3. Location of internal utilities and appurtenances concealed in the construction, referenced to visible and accessible features of the structure.
   4. Details not on original contract drawings.
   5. Identity locations by at least two dimensions to permanent structures.
   6. Field changes of dimension and detail.
   7. Changes made by field order or by change order.

1.5 REPRODUCIBLE RECORD DRAWINGS

A. Transfer all recorded information from the original record drawings to one set of reproducible myler films and deliver to the Owner.
B. Identify all record drawing information.
C. Delete Engineer seals and ownership information from the documents.

1.6 SUBMITTALS

A. Submit record documents to Owner with final Application for Payment.
B. Accompany submittal with transmittal letter in duplicate containing:
    1. Date.
    2. Project title and number.
    3. Contractor’s name and address.
    4. Title and number of each record document.
    5. Signature of an officer of the contracting firm.

END OF SECTION 260106

JEFFERSON COUNTY ENGINEERING DEPARTMENT
JCSO HANGAR BUILDING

SECTION 260513 - CONDUCTOR SYSTEMS

PART 1 - GENERAL

1.1 GENERAL

A. Conductors:
   1. Soft drawn annealed copper, having a conductivity of not less than 98% of that of pure copper.
   2. Continuous without weld or splice throughout its length.
   3. Approved by NEC for the environment.
   4. Bear the UL label.

1.2 CIRCUITRY

A. The intent of the drawings is to indicate schematically the circuitry required.
B. Branch circuit may be grouped in a single raceway provided the work performed in grouping conductors:
   1. Complies with all applicable articles in the National Electrical Code.
   2. Includes, but shall not be limited to, ampacity derating of conductors.
   3. Observes maximum capacities of raceways.
C. Adopt a standard connection system to lights and appliances uniform throughout the system.
D. Insure that branch circuits are so connected to the panels as to provide balanced loading insofar as practical.

1.3 CONDUCTORS AND CONNECTIONS

A. Install no branch circuit with wire smaller than No.12.
B. Branch circuits shall be of such size that the drop in potential to the furthers point on the circuit shall not exceed 2%.
C. Connections for electrical and mechanical security:
   1. Number 8 wire and larger with forged copper pressure connectors.
   2. Number 10 wire and smaller made with indent type splice caps or electrical spring connectors.
   3. Cover joints with sufficient plastic tape or caps to insure insulating value equal to that of the conductor insulation itself.
D. Pad sharp corners and voids to prevent damage.
E. In junction boxes joining underground conduit or in wet location, make connections waterproof with Scotch 2200 self-fusing rubber based insulating rubber based compound laminated to PVC backing.
F. Conductors in continuous row fluorescent fixtures – code gauge type rated at 90 degrees Celsius.

1.4 COLOR CODING

A. All branch circuits and feeder conductors color coded as scheduled on the

drawings.

1. Neutrals of different voltage systems must be of different color.
2. All circuit conductors of the same color - connected to the same feeder conductor throughout the installation.
3. Conductors intended solely for equipment grounding purposes - green in color.

B. Wire Number 6 AWG or smaller, - the color of the insulation covering.

C. Wire larger than No. 6 AWG and other types of wire: self-adhesive, rap around wire markers of solid colors.

D. Mark each wire at panel boards, auxiliary gutters, junction boxes, pull boxes, outlets, disconnect switches and control centers.

END OF SECTION 260513

JEFFERSON COUNTY ENGINEERING DEPARTMENT
JCSO HANGAR BUILDING

SECTION 260526 - ELECTRICAL GROUNDING

PART 1 - GENERAL

1.1 WORK INCLUDED

A. Grounding shall conform to the requirements of:
   1. National Electrical Code
   2. Governing local codes
   3. Local Utility Company

B. Ground effectively and permanently:
   1. Neutral conductor at the main service disconnect and other separately derived systems.
   2. All conduit systems.
   3. All electrical equipment and related current carrying supports or structures.
   4. All Metal piping systems.
   5. All building structural metal frames.

1.2 GROUNDING ELECTRODE

A. 3/4" X 10'- 0" copper clad grounding electrode.
   1. UL listed.

B. Connections.
   1. Burundey irreversible copper hydraulic compression fittings.

C. Driven with top of electrode at grade.

D. The total ground resistance shall not exceed 10 ohms for service entrance grounds and 25 ohms for equipment grounds.

E. Resistance of neutral ground shall be measured using a megger earth resistance tester.
   1. Not less than 48 hours after last rainfall.
   2. Shall not exceed 10 ohms

1.3 GROUNDING SYSTEMS

A. In the service equipment, provide a ground bus separate from the neutral bar.
   1. Bond it with copper bus bar to the neutral bar.

B. Connect the grounding electrode conductor between the ground bus and the driven ground electrode.

C. Install a green insulated grounding conductor:
   1. In each section of nonmetallic conduit.
   2. To all weatherproof receptacles.
   3. With each panel feeder.
   4. With each branch circuit with two or three pole breakers.
   5. To the transformer.
   6. Flexible steel conduit.

D. Provide all conduit terminating I electrical equipment with grounding bushings

and ground wire extended to ground bus in equipment.

1.4 MISCELLANEOUS REQUIREMENTS

A. Continuity of the building equipment grounding system shall be maintained throughout the project. Grounding jumpers shall be installed across conduit expansion fittings, liquid-tight flexible metal and flexible metal conduit, light fixture pigtails in excess of 6', and other non-electrically continuous raceway fittings.

B. Grounding conductors and grounding electrode conductor shall be green insulated stranded copper conductors and run in a suitable raceway. Grounding conductors and grounding electrode conductor shall be continuous, without joints or splices over their entire length, except as allowed by NEC.

END OF SECTION 260526

JEFFERSON COUNTY ENGINEERING DEPARTMENT
JCSO HANGAR BUILDING

SECTION 260529 - SUPPORTS AND FASTENERS

PART 1 - GENERAL

1.1 GENERAL

A. Use methods and devices recommended by the equipment manufacturer.
B. Fasteners shall be compatible with the material into which they are applied.

1.2 QUALITY ASSURANCE

A. Support systems shall be adequate for weight of equipment and conduit, including wiring, which they carry.

1.3 SECURING AND SUPPORTING OF CONDUIT AND BOXES

A. Support Conduit:
   1. At intervals not greater than 7 feet.
   2. Within three feet of bends, outlets and junction box.
   3. With channel support with conduit fittings on vertical runs.
B. Support outlet and junction boxes.
   1. Independently to surface on which conduit is run.
   2. Rigidly to building structure.
   3. Conduit shall not be used for sole support of boxes.
C. Support individual conduit with approved anchor straps employing:
   1. Toggle bolts on hollow masonry.
   2. Self-drilling anchors or power driven studs on concrete surfaces.
   3. Perforated strap in not approved as hanger material.
   4. Use electro-galvanized or cadmium plated steel bolts, threaded rods, nuts, washers and screws.

1.4 SURFACE MOUNTED EQUIPMENT

A. Install surface-mounted cabinets, boxes and panel boards with minimum of four anchors.
B. Provide steel channel supports to stand cabinet one inch off wall.
C. Use fasteners suitable for the surface or structure and weight of device.

END OF SECTION 260529

JEFFERSON COUNTY ENGINEERING DEPARTMENT
JCSO HANGAR BUILDING

SECTION 260533.13 - CONDUIT SYSTEMS

PART 1 - GENERAL

1.1 GENERAL

A. Install conduit systems as shown on the drawings.
B. Installation and all components of the system:
   1. UL labeled.
   2. Conform to National Electrical Code
C. Use fittings and methods of joining conduit as set forth in the National Electrical Code.
D. Conduit termination's at electrical equipment:
   1. Secured in place by locknuts inside and outside.
   2. Provided with approved bushings.
E. Join rigid conduit with standard couplings according to the manufacturer's recommendations.
F. Adhere to the general routing of conduit systems as shown on the drawings.
G. Install all conduits in the most direct, neat, and workmanlike manner, employing only skilled mechanics.
   1. Install conduit to conserve space and not interfere with use of space.
H. Hold horizontal and vertical conduit as close as possible to walls, ceilings, struts, and members as to occupy the minimum space consistent with the proper requirements for service of adjacent elements.
I. Layout to maintain headroom, neat mechanical appearance, and to support equipment loads required.

1.2 CONNECTIONS TO MOTORS AND EQUIPMENT

A. Flexible conduit:
   1. Minimum Length: 24 inches
   2. Maximum Length: 36 inches
B. For all connections to motors, transformer and control valves:
   1. U.L. Labeled Liquid-tight non-metallic with PVC watertight fittings.
   2. U.L. labeled Liquid-tight Flexible Steel Conduit

1.3 CONDUIT MATERIALS

A. Electrical metallic tubing (EMT).
   1. Cold rolled steel tubing.
   2. Zinc coated inside and out.
   3. UL labeled standard weight.
B. Fittings meet same requirements as for EMT. UL labeled.
   1. Only compression fittings shall be utilized.
   2. Cast Metal fittings are not approved and shall not be utilized.
C. PVC conduit:
   1. UL labeled type 40.
   2. PVC fittings and solvent welded joints.
D. Rigid aluminum conduit:

1. UL labeled schedule 40.
2. 6063 aluminum alloy T3 temper.

E. Fittings meet same requirements as for rigid aluminum conduit. UL labeled.
F. Conduit run exposed to the weather:
   1. Rigid aluminum conduit
G. Conduit run underground or beneath the building slab:
   1. PVC
H. Branch circuit exposed inside building:
   1. Electrical metallic tubing.
I. Conduit in concrete floor slabs at grade:
   1. PVC.

1.4 INSTALLATION

A. Conduit 1" and smaller – in the slab dimension. Slab dished for larger conduit to accommodate 4" of concrete over the conduit with 2" of encasement.
B. Cap or plug conduit ends upon completion of the run until the wire is pulled.
C. Swab out conduit to remove moisture and debris before wires are pulled in.
D. Completely install each conduit run prior to pulling conductors.
E. Route all exposed conduits parallel or perpendicular to building lines.
F. Alter conduit routing to avoid structural obstructions, minimizing crossovers.

1.5 MINIMUM CONDUIT SIZES

A. Branch circuit: 1/2 inch.

1.6 RACEWAY CONTINUITY

A. Assure the electrical continuity of all metal conduit systems.
B. Approved methods shall comply with the requirements of the 2005 National Electrical Code.

1.7 EMPTY CONDUIT SYSTEM

A. Empty conduit in which cable is to be installed by others shall be minimum 3/4 inch.
   1. National Electrical Code.
B. Ground effectively and permanently:
   1. Neutral conductor.
   2. All conduit Systems.
   3. All electrical equipment.

END OF SECTION 260533.13

JEFFERSON COUNTY ENGINEERING DEPARTMENT
JCSO HANGAR BUILDING

SECTION 260533.16 - PULL AND JUNCTION BOXES

PART 1 - GENERAL

1.1 WORK INCLUDED

A. Pull boxes.
B. Junction boxes

1.2 SUMMARY

A. Provide where required for the installation and servicing of the conductors.
B. Sized to conform with the National Electrical Code.

1.3 MATERIALS

A. Galvanized steel, gauges conforming to NEC.
B. If underground or at grade use reinforces plastic; concrete with cast iron lid; or cast iron.

1.4 CONSTRUCTION

A. Surface mounted pull boxes.
    1. With screw-on or hinged cover.
    2. Galvanized with waterproof gasket.
B. Flush mounted pull boxes.
    1. With overlapping covers.
    2. With flush head cover retaining screws.
    3. Prime coated indoors.
    4. Galvanized outdoors with waterproof gasket.

1.5 INSTALLATION

A. Locate pull and junction boxes above removable ceilings or in electrical rooms, utility rooms, or storage areas.
B. Close unused openings in pull and junction boxes with a knockout closure.

END OF SECTION 260533.16

JEFFERSON COUNTY ENGINEERING DEPARTMENT
JCSO HANGAR BUILDING

SECTION 260553 - IDENTIFICATION

PART 1 - GENERAL

1.1 GENERAL

A. Provide identifying nameplates for all permanently connected electrical equipment.
   1. Identify as shown on the drawings.
   2. Switches and starters identified by the load served.
   3. Transformers identified by the scheduled identification and the load served.
   4. Panels identified by the scheduled identification.
   5. Indicate voltage and phases.
   6. Panels.
   7. Transformers, primary and secondary

B. Provide identification nameplates for all elements of the control and monitor panel.

C. Provide permanent identification of all wiring.

1.2 NAMEPLATES

A. Fabricated of laminated engraved plastic, etched, or photo-anodized metal.

B. Secured to equipment with escutcheon pins, self-tapping or machine screws, or approved adhesive that is removable only by mechanical means.

C. Have letters at least 1/4" high.

1.3 SPECIFIED MARKERS

A. Provide a specified marker on each wire in conduit including pull wires.
   1. Where runs are interrupted in junction boxes.
   2. Terminated in electrical equipment.
   3. Showing circuit number and identification.

END OF SECTION 260553

JEFFERSON COUNTY ENGINEERING DEPARTMENT
JCSO HANGAR BUILDING

SECTION 261216 - DRY TYPE TRANSFORMER

PART 1 - GENERAL

1.1 GENERAL

A. Provide the dry type transformer where shown on the drawings or required for system operation.
B. Minimum overload capacity to comply with ASA standards.
C. Provide in an enclosure suitable for its locations.
D. Electrical characteristics and capacity as scheduled on the drawings.

1.2 CONSTRUCTION

A. Class 220 degrees C insulation.
B. Constructed in accordance with NEMA standards and the NEC.
C. Terminal compartment in an ambient temperature location.
D. Incorporate build in vibration dampening systems.
E. Sound levels shall conform to the NEMA standards after installation.
F. Provide transformer with 6 taps.
G. Transformers 25 KVA and above 80 degrees C rise above 40 degrees C ambient.

1.3 INSTALLATION

A. Install the transformer according to the manufacturer’s installation manual.

1.4 ACCEPTABLE MANUFACTURES

A. Square D
B. General Electric

END OF SECTION 261216

JEFFERSON COUNTY ENGINEERING DEPARTMENT
JCSO HANGAR BUILDING

SECTION 261313 - CIRCUIT BREAKER PANELBOARDS

PART 1 GENERAL

1.1 CIRCUIT BREAKER PANELBOARDS

A. Panel boards:
   1. Provided with cover and door.
   2. Equipped with the number and size of circuit breakers scheduled.
   3. Provided with a typewritten directory of circuits mounted in a card holder on the inside of the panel.

B. Breakers:
   1. Thermal magnetic.
   2. Trip indicating.
   3. Multi-pole breakers provided with:
      a. Common trips on all poles.

C. Constructed in accordance with all applicable NEMA and UL Standards.

D. Panel boards bussing:
   1. Tin plated, full size copper.
   2. Of sufficient cross section area to continuously conduct rated full load current with a maximum temperature rise of 50 degrees C. above an ambient temperature of 40 degrees C.
   3. Provide a grounding bus sized at 25% of the phase bus.
   4. Provide a neutral bus sized at 100% of the phase bus.

E. Identify each breaker with an engraved laminated nameplate stating the load it serves.

F. Provide 3" laminated plastic nameplate with 3/8" letters on cover of each panel board.
   1. Refer to specifications 16021 - Identification

G. Verify the electrical characteristics of all equipment for use in preparing shop drawings for panelboard.

1.2 ACCEPTABLE MANUFACTURERS

A. Square D.

B. General Electric

END OF SECTION 261313

JEFFERSON COUNTY ENGINEERING DEPARTMENT
JCSO HANGAR BUILDING

SECTION 261323 - SAFETY SWITCHES

PART 1 - GENERAL

1.1 GENERAL REQUIREMENTS

A. Provide where shown on the drawings and where required by NEC.
B. Conform to NEMA and UL standards for heavy duty switches.

1.2 ENCLOSURE

A. NEMA 3R or NEMA 1
B. Operating handle lockable “OFF” with three pad locks.
C. Door interlocks:
    1. Defeatable, front accessible interlock.
        a. To prevent opening door when operating handle is in the “ON” position.
        b. To prevent throwing switch to “ON” position when door is open.
D. Provide specified identification label.

1.3 CONSTRUCTION

A. Rated at system voltage.
B. Current rating as shown on the drawings.
C. Three Pole:
    1. Quick make, quick break action.
    2. Current carrying parts plated.
    3. Provide with auxiliary interlock contact where shown on the drawing.

1.4 ACCEPTABLE MANUFACTURERS

A. Square D.
B. General Electric

1.5 INSTALLATION OF SAFETY AND DISCONNECT SWITCHES

A. Install safety and disconnect switches where shown, in accordance with the manufacturer’s written instructions, requirements of the NEC, NECA Standard of Installation, and industry practices.
B. Provide safety switches where shown and at each motor out of sight of, or more than 50 feet from, the switch or panel from which the motor circuit is fed.
C. Provide all safety and disconnect switches with galvanized channel sub-structure. Switches shall not be supported by conduit alone.
    1. Provide neoprene to isolate S.S. Enclosures.
D. Coordinate safety and disconnect switch installation work with electrical raceway and cable work as necessary for interface.

1.6 TESTING

A. Before energizing, check for continuity of circuits and short circuits.

END OF SECTION 261323

JEFFERSON COUNTY ENGINEERING DEPARTMENT
JCSO HANGAR BUILDING

SECTION 261600 - POWER SERVICE ENTRANCE

PART 1 - GENERAL

1.1 GENERAL

A. Obtain from the electrical utility company all required information to provide a complete electrical service change over.

1.2 WORK INCLUDED

A. Provide the construction coordination required to effect the utility power connection at the proper time.
B. Coordinate that part of the service installation. Construction including metering provisions, provided by the electric utility. Pay all fees required by the electric utility company for their part of the work.
C. Provide all services, material, equipment, installation and labor to construct the power service entrance in accordance with the requirements of:
   1. The Electric Utility Company.
   2. The National Electric Code.
   3. Governing Local codes.

END OF SECTION 261600

JEFFERSON COUNTY ENGINEERING DEPARTMENT
JCSO HANGAR BUILDING

SECTION 265100 - LUMINARIES

PART 1 - GENERAL

1.01 GENERAL

A. Provide a luminaire for each luminaire symbol shown on the drawings.

B. The descriptions and catalog numbers establish the quality, appearance, and performance of the specified luminaires.

C. Verify all dimensions and electrical characteristics with actual project conditions.

D. If conditions do not permit the installation of any of the lighting details as specified, request guidance from the Owner prior to installation.

END OF SECTION 265100

JEFFERSON COUNTY ENGINEERING DEPARTMENT
JCSO HANGAR BUILDING

SECTION 310000 - GEO-TECHNICAL INVESTIGATION REPORTS

GENERAL

A. A Geo-technical Investigation Report was not performed for this project. However, a Geo-technical Investigation Report was performed to an adjacent site 200' to 250' away from this site. This report was conducted in 2009 for the construction of the SETRA Hangar No. 7. Due to its proximity to the proposed hangar building in this project, the data provided in this report will be sufficient for this project.

B. The report reproduced on the following pages is an exact copy of the original Geotechnical Study - Final Report for the SETRA Hangar No. 7 Jefferson County, Texas prepared by Tolunay-Wong Engineers, Inc. (Project No. 09.23.100) June 2009.

C. Procedures and precautions recommended in the following Geotechnical Study - Final Report and attachments are to be strictly followed by the contractor. Where the technical sections of these specifications differ from the recommendations of the Geotechnical Study - Final Report, the more stringent requirement shall govern.

D. The Contractor is responsible for examining the site and determining the nature of the materials to be excavated.

E. Contractor shall be responsible for paying for all failed tests. Geo-Technical inspection service will bill all failed tests directly to the Contractor. Evidence of payment shall be a requirement for substantial completion.

GEOTECHNICAL STUDY - FINAL REPORT FOLLOWS IN ITS ENTIRETY AND COMPLETES SECTION 310000.

GEOTECHNICAL STUDY – FINAL REPORT
SETRA HANGAR NO. 7
JEFFERSON COUNTY, TEXAS

Prepared for

Bartlett Cocke General Contractors
15865 International Plaza Drive, Suite 280
Houston, Texas 77032

Prepared by

Tolunay-Wong Engineers, Inc.
2455 W Cardinal Drive, Suite A
Beaumont, Texas 77705
(409) 840-4214

June 2009

Project No. 09.23.100

Tolunay-Wong Engineers, Inc.

June 9, 2009

Mr. Jason Atherton
Bartlett Cocke General Contractors
15865 International Plaza Drive, Suite 280
Houston, Texas 77032

Re: Geotechnical Study – Final Report
SETRA Hangar No. 7
Jefferson County, Texas
TWE Project No: 09.23.100

Dear Mr. Atherton,

We are pleased to submit this final report of our geotechnical study for the above referenced project. This report contains a detailed description of the field and laboratory work performed for this study, as well as soil boring logs including tabulated laboratory test results. Also included in this report are our recommendations for design and construction of suitable foundations for the proposed Southeast Texas Regional Airport (SETRA) Hangar No. 7.

We appreciate the opportunity to work with you on this phase of the project, and look forward to the opportunity to provide additional services as the project progresses. If you have any questions regarding the report or if we can be of further assistance, please contact us.

Sincerely,
TOLUNAY-WONG ENGINEERS, INC.

Nutan Palla, E.I.T., Ph.D.
Project Engineer

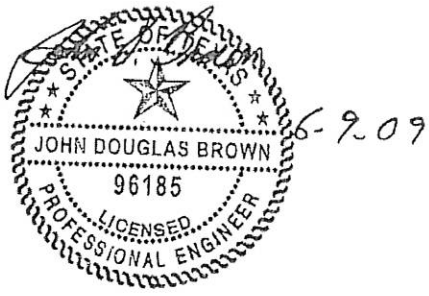

6-9-09

John D. Brown, P.E.
Geotechnical Engineer

TABLE OF CONTENTS

1	**INTRODUCTION AND PROJECT DESCRIPTION**		**1-1**
	1.1	Introduction	1-1
	1.2	Project Description	1-1
2	**PURPOSE AND SCOPE OF SERVICES**		**2-1**
3	**FIELD EXPLORATION**		**3-1**
	3.1	Test Borings	3-1
	3.2	Drilling Methods	3-1
	3.3	Soil Sampling	3-1
	3.4	Boring Log	3-2
	3.5	Groundwater Measurements	3-2
4	**LABORATORY TESTING**		**4-1**
	4.1	Soil Classification Tests	4-1
	4.2	Soil Strength Tests	4-1
	4.3	Laboratory Procedures	4-1
5	**SITE CONDITIONS**		**5-1**
	5.1	General	5-1
	5.2	Site Description and Surface Conditions	5-1
	5.3	Subsurface Soil Stratigraphy	5-1
	5.4	Subsurface Soil Properties	5-1
	5.5	Groundwater Observations	5-2
6	**GEOTECHNICAL DESIGN RECOMMENDATIONS**		**6-1**
	6.1	General Foundation Recommendations	6-1
	6.2	Site Preparation	6-1
	6.3	Foundation System	6-2
	6.4	Floor Slab Design	6-4
7	**LIMITATIONS AND DESIGN REVIEW**		**7-1**
	7.1	Limitations	7-1
	7.2	Design Review	7-1
	7.3	Construction Monitoring	7-1
	7.4	Closing Remarks	7-1

TABLES, FIGURE, AND APPENDIX

Tables

Table 4-1	Laboratory Testing Program	4-1
Table 5-1	Suction Measurements	5-2
Table 5-1	Groundwater Level Measurements	5-3
Table 6-1	Compaction Equipment	6-2

Figure

Figure 1 Plan of Borings

Appendix

Appendix A - TWE Project Boring Logs (B-1 thru B-3) and, Key to Symbols and Terms Used on the Logs

1 INTRODUCTION AND PROJECT DESCRIPTION

1.1 Introduction

This report presents the results of the geotechnical study for the Southeast Texas Regional Airport (SETRA) Hangar No. 7 in Jefferson County, Texas.

This study was conducted in general accordance with TWE Proposal P09-B044 dated March 27, 2009, and authorized by Bartlett Cocke Subcontract No. 01.014500-000.S.

1.2 Project Description

Based on information provided, we understand that the project consists of a 90-ft by 300-ft steel frame hangar and a smaller adjoining office building with dimensions of 25-ft by 180-ft. The project details were provided verbally and via electronic mail. The transmittal included a site layout and preliminary foundation details of the planned building.

2 PURPOSE AND SCOPE OF SERVICES

The purposes of the geotechnical study were to investigate the soil and groundwater conditions and to interpret this data to develop geotechnical design and construction guidelines for the proposed Hangar No. 7. This study included field exploration to obtain subsurface stratigraphy and groundwater conditions, geotechnical laboratory testing on recovered soil samples to evaluate the physical and engineering properties of the subsurface materials encountered, and engineering analyses to develop design and construction recommendations with respect to:

- Subsurface soil and groundwater conditions;
- Foundations;
- Foundation settlement estimates;
- Subgrade preparation for building pad, and;
- Floor slab.

Environmental assessments, a geologic fault study, and recommendations for areas outside the area covered by the project-boring layout were beyond the scope of this study.

3 FIELD EXPLORATION

3.1 Test Borings

Tolunay-Wong Engineers, Inc. conducted an exploration of subsurface soil and groundwater conditions at the proposed project site on May 13, 2009 by drilling three (3) soil test borings. Borings B-1 through B-3 were drilled to a depth of thirty (30) feet. The boring depths were measured from the existing ground surface at the time of our field activities. A total of 90 vertical feet was drilled.

TWE representatives were present at the site to coordinate the field activities and to log the boreholes. The boring locations were staked by a TWE representative prior to commencement of the field work. The approximate boring locations are shown on Figure 1.

3.2 Drilling Methods

Field operations were performed in general accordance with *Standard Practice for Soil Investigation and Sampling by Auger Borings* [American Society for Testing and Materials (ASTM) D 1452]. Soil borings were drilled with an all-terrain mounted drilling rig equipped with a rotary head. Boreholes were advanced using dry-auger and wet-rotary drilling methods. Typically, borings are drilled using a flight auger to advance the boreholes until groundwater is encountered or until the borehole becomes unstable and collapses. At that point, the borings are completed using wet-rotary drilling techniques. Samples were obtained continuously at intervals of 2 ft from the ground surface to a depth of 12 ft, at the 13 to 15 ft depth interval, and then at intervals of 5 ft to the 30-ft completion depth.

3.3 Soil Sampling

Cohesive soil samples were recovered from the test borings by hydraulically pushing a 3-in. diameter, thin-walled tube a distance of about 24 inches. The field sampling procedures were conducted in general accordance with the *Standard Practice for Thin-Walled Tube Sampling of Soils* (ASTM D 1587). The field technician visually classified the recovered soils, and obtained a penetration resistance measurement of the recovered soils using a calibrated pocket penetrometer. A factor of 0.67 is typically applied to the penetrometer measurement to estimate the unconfined compressive strength of the Gulf Coast cohesive soils. Undrained shear strength is computed as ½ of the unconfined compressive strength. The samples were extruded in the field, sealed and placed into secure containers, protected from disturbance, and transported to the laboratory. The recovered soil sample depths and pocket penetrometer measurements are shown on the test boring logs in Appendix A.

Cohesionless sands and semi-cohesionless silts were collected with the Standard Penetration Test (SPT) sampler driven 18 in. by blows from a 140 pound hammer falling 30 in. (ASTM D 1586). The number of blows required to advance the sampler three consecutive 6 in. depths are recorded for each corresponding sample on the boring log. The N- value, in blows per foot, is obtained from SPT by adding the last two blow count numbers. The samples obtained from the split barrel sampler were visually classified, sealed in plastic bags, and transported to our laboratory. The SPT sampling intervals and blow counts are presented on the boring logs in Appendix A.

3.4 Boring Logs

Our interpretations of general subsurface soil and groundwater conditions at the boring locations are included on the boring logs. The interpretations of the soil types throughout the boring depth and the locations of strata changes were based on visual classifications during field sampling and laboratory testing using ASTM D 2487, Unified Soil Classification System, and ASTM D 2488, Description and Identification of Soils. The boring logs include the sample type and interval depth for each sample along with the corresponding pocket penetrometer readings for cohesive soils. The project boring logs and a key to the terms and symbols used on the logs are presented in Appendix A.

3.5 Groundwater Measurements

Groundwater levels were measured in the open boreholes during drilling. Measurements were taken initially during dry-auger drilling when groundwater was first encountered and then at five minute intervals over a fifteen minute time period. The groundwater observations in the project borings are summarized in Section 5.5 of this report entitled *"Groundwater Observations"*.

4 LABORATORY TESTING

A laboratory testing program was conducted on selected samples to assist in classification of the soils encountered in the borings, and to evaluate the engineering properties of the soils pertinent to the design of foundations for this project.

4.1 Soil Classification Tests

All samples obtained during the field program were visually classified in the laboratory according to procedures outlined in ASTM D 2488. In addition, tests for natural moisture content, Atterberg limit, and material finer than the No. 200 sieve were conducted on selected samples obtained from the borings. These laboratory test results were used to classify the soils encountered in general accordance with the Unified Soil Classification System (ASTM D 2487). Results of the classification tests are presented on the Logs of Borings, B-1 through B-3, in the Appendix.

Total suction tests were also performed on soil samples recovered from boring B-1 to develop a soil moisture profile with depth. The suction test uses the chilled-mirror technique to measure the water potential (suction) of a sample. Water potential is the vapor pressure of air in equilibrium with a sample in a sealed measurement chamber. Water potential is measured by equilibrating the liquid phase water of the sample with the vapor phase water in the headspace of a closed chamber, then measuring the vapor pressure of that headspace. The water potential (suction) is displayed in MegaPascals (MPa) and pF.

4.2 Soil Strength Tests

The approximate undrained shear strength of selected samples of cohesive soils obtained in the borings was determined by performing unconfined compression tests. Natural moisture content and dry unit weight was determined for each sample tested for compression. Results of the unconfined compression tests are presented on the Logs of Borings, B-1 through B-3, in the Appendix.

4.3 Laboratory Procedures

Laboratory tests were performed in general accordance with ASTM Standards to measure physical and engineering properties of the soil samples obtained for this project. The types of laboratory tests performed are presented in Table 4-1.

Table 4-1
Laboratory Testing Program

Type of Test	Testing Method
Natural Water Content	ASTM D 2216
Atterberg Limits	ASTM D 4318
Material Passing Sieve No. 200	ASTM D 1140
Dry Unit Weight	ASTM D 2937

Type of Test	Testing Method
Unconfined Compression	ASTM D 2166
Total Suction	Chilled-Mirror Technique

The tests results are shown on the boring logs in Appendix A. The total suction test results are presented in Section 5. 4 *Subsurface Soil Properties*.

5 SITE CONDITIONS

5.1 General

Our interpretations of soil and groundwater conditions at the site are based on information obtained at the soil boring locations only. The project boring logs are presented in Appendix A. This information has been used as the basis for our conclusions and recommendations. Subsurface conditions may vary at areas not explored by the project soil borings. Significant variations at areas not explored by the project borings will require re-evaluation of our recommendations.

5.2 Site Description and Surface Conditions

The proposed project site is located at the Southeast Texas Regional Airport, 4875 Parker Dr., Beaumont, Texas. The site is situated east of the main terminal and southwest of the newly constructed parking area. The site is located in a low-lying area surrounded by parking and grassy fields. The proposed construction area generally consists of open grassy area between the parking lot and the fence separating the taxiway and existing airplane hangers. The site was generally flat and the ground surface was firm, and drainage appeared to be good.

5.3 Subsurface Soil Stratigraphy

The soil stratigraphy, as interpreted from borings B-1 through B-3, was predominantly cohesive within the 30-ft explored depth. The cohesive soils typically consisted of firm to stiff consistency, high plasticity fat clays and fat clays with sand to 10-ft to 13-ft depths, followed by medium plasticity stiff lean clays with sand to 17-ft and 18-ft depths. Below 17-ft and 18-ft depths, the cohesive soils were underlain by medium dense sandy silts and silty sands to 27-ft and 28-ft depths, followed by firm to stiff lean clays to the boring completion depths. We observed clay pockets and seams, silt partings, sand pockets, calcareous nodules, shell fragments, and slickenslided substructure within the soil matrix.

The upper 2-ft to 4-ft soils were identified as fill in borings B-1 through B-3. It should be stressed that it is relatively difficult in practice to accurately delineate fill from similar natural soils. Fill classifications are made based upon visual observations and require considerable judgment. The interpreted fill depths may vary somewhat from actual conditions.

Detailed descriptions of the soils encountered at the boring locations are presented on the boring logs included in Appendix A.

5.4 Subsurface Soil Properties

We measured liquid limits (LL) of 54 to 90 and corresponding plasticity indices (PI) of 39 to 69 on selected five high plasticity cohesive soil samples recovered from the 2 to 12-ft depth range in the project borings. Selected three medium plasticity lean clay samples obtained from the 10-ft and 28-ft depths in borings B-1 and B-3 yielded liquid limits of 40 to 48, and plasticity indices of 23 to 31. In-situ moisture contents of the tested soil samples were 8 to 19 percentage points wet of the corresponding plastic limits, indicating a relatively wet soil condition at the time of field work. The plasticity data indicates a moderate to high, but mostly high shrink/swell potential

with moisture variation. However, the swell potential at this site is somewhat reduced based on the moisture content and plasticity data. Measured fines contents of three (3) selected cohesive soil samples ranged from 77% to 97%.

Suction measurements were taken on the samples recovered from the upper 15-ft depth in boring B-3. The total suction values and corresponding moisture contents are tabulated in the following table-5-1.

Table 5-1
Suction Measurements

Boring No.	Depth (feet)	Moisture Content (%)	Total Soil Suction (pF)	Soil Type
B-3	0-2	32	3.68	Fat Clay "Fill"(CH)
	2-4	39	3.54	Fat Clay (CH)
	4-6	33	3.61	Fat Clay (CH)
	6-8	37	3.51	Fat Clay (CH)
	8-10	35	3.64	Fat Clay (CH)
	10-12	27	3.60	Fat Clay (CH)
	13-15	22	3.22	Lean Clay w/ Sand (CL)

Movements in expansive clays are generated by changes in suction which are brought about by the entry or loss of moisture.[1] For comparison purposes, a suction value of 2.5 pF corresponds to the wettest soil condition possible if measured under soaking conditions (such as a plumbing leak), which is typical of excessive wetting. The driest soil condition (at the surface) is 4.5 pF if the surface suction is controlled by vegetation, or 6.0 pF if the surface suction is controlled by evaporation from bare soil, or soil with wilted vegetation. For clays, the plastic limit is 3.5 pF (Lytton, 1994).

Measured undrained shear strengths, based on unconfined compression testing, ranged from 510 psf to 1380 psf for selected seven cohesive samples recovered from the 2-ft to 30-ft depth interval in the project borings. Dry unit weights of the tested samples ranged from 84 pcf to 101 pcf. Pocket penetrometer readings on recovered cohesive soil samples ranged from 0.50 tsf to 3.25 tsf and averaged 1.76 tsf. Based on the calibrated pocket penetrometer readings and the undrained shear strengths, the cohesive soils recovered from the project borings were inferred to have firm to very stiff, but typically stiff consistencies.

5.5 Groundwater Observations

Groundwater measurements obtained in the project borings during drilling are presented in the following table:

[1] Prediction of Movement in Expansive Clays, Robert L. Lytton, Proceedings from Foundations and Embankments Deformations Conference, 1994, pg, 1828.

Table 5-2
Groundwater Level Measurements

Boring No.	Boring Depth (ft)	Groundwater Level Depth		
		Encountered During Drilling (ft)	Observed in the Open Borehole after 15 minutes (ft)	Caved Depth (ft)
B-1	30	Dry	-	-
B-2	30	Dry	-	-
B-3	30	17	8	14

Groundwater levels may fluctuate with climatic and seasonal variations and should be verified before construction. Accurate determination of the static groundwater level is typically made with a standpipe piezometer. Installation of a piezometer to evaluate the long-term groundwater condition was not included in the work scope.

6 GEOTECHNICAL DESIGN RECOMMENDATIONS

6.1 General Foundation Recommendations

This section includes guidelines for site preparation, as well as foundation design and construction recommendations for the proposed airplane hangar.

6.2 Site Preparation

Site preparation, including site stripping, proofrolling and fill placement will be required. These considerations are addressed in the following paragraphs.

6.2.1 Site Access during Construction

Site access should not become a problem during construction because the surficial fat clays are relatively impermeable. Construction delays due to wet weather conditions may be avoided if the ground surface is graded to allow drainage prior to a rainfall event.

6.2.2 Site Stripping and Proofrolling

The surficial soils within the building outline should be stripped to a minimum of 6 inches depth to remove top soil, organic matter, major root systems, and debris. After stripping, the construction area should be proof-rolled to detect zones of soft or wet soils. If encountered, such soils should be undercut and replaced with compacted backfill. Close monitoring of the proof-rolling should be made during periods of extended rainfall to detect loose or wet soils.

The backfill should consist of soils having similar physical and moisture characteristics as surrounding natural soils and should be compacted to a minimum of 95 percent of the maximum dry density in accordance with ASTM D 698 at a moisture content of not less than 1 percent below and not more than 3 percent above optimum moisture content.

The ground surface should be appropriately graded at all times to prevent ponding of rainfall runoff. The site is relatively flat and natural drainage may not be adequate for construction operations during wet weather conditions. The establishment of temporary drainage swales may be necessary to expedite construction during periods of extended rainfall.

6.2.3 Fill Placement

Fill for the new hangar site should consist of select cohesive soil. Select fill soils should have measured plasticity indices of 10 to 20 and liquid limits less than 40, and should be free of organic matter and other deleterious material. Select fill should be tested and approved by the Geotechnical Engineer prior to use for the building pad.

The maximum loose thickness for each lift will depend on the type of compaction equipment used. Recommended fill layers are summarized in the following table:

Table 6-1
Compaction Equipment

Maximum Lift Thickness for Different Compaction Equipment	
Compaction Equipment	**Maximum Lift Thickness**
Mechanical Hand Tamper	4 in.
Pneumatic Tired Roller	6 in.
Tamping Foot Roller	8 in.
Sheepsfoot Roller	8 in.

All fill should be compacted to at least 95% of the standard Proctor maximum dry density at moisture content of not less than 1 percent below and not more than 3 percent above optimum moisture content (ASTM D 698). We recommend compaction testing of all fill placed under floor slab areas.

6.3 Foundation System

The building columns will transfer a maximum compression force of 50.2 kips and a maximum uplift force of 63.5 kips into the underlying foundations. Also, a maximum shear force of 9.0 kips could develop at the column base due to wind loads. Column loads were provided in the Preliminary Reactions Drawing prepared by Red Dot Buildings and furnished by Bartlett-Cocke.

The foundation system must satisfy two independent engineering criteria with respect to soil conditions. One criterion is that the system be designed with an appropriate factor of safety against bearing capacity failure of the soils underlying the foundations. The second criterion is that movement beneath the foundation system due to compression (consolidation) or expansion (swell) of the underlying soils must be within tolerable limits for the structure.

The field and laboratory data acquired in borings B-1 through B-3 indicated the presence of competent soils. Bearing capacity failure of the soils underlying the foundations is not anticipated to be a concern provided the recommendations presented herein are implemented.

The second criterion addressing movement is a design concern given the presence of potentially expansive clay within the zone of seasonal moisture change, and the future landscaping around the hangar perimeter. The potential for shrink/swell movements must be considered in selection and design of the foundation and floor slab system. Plasticity indices (PI) of the soil within the active zone (upper 6 ft depth) range from 53 to 69. When considering PI only, clays with PIs of greater than 20 have a high potential for volume change with variation in soil moisture content.

6.3.1 Drilled Piers

Principal structural loads for the proposed SETRA Hangar No. 7 may be supported on drilled and underreamed, cast-in-place concrete footings. The piers should be placed in competent natural cohesive soils at a depth of at 10-ft below existing grade. The recommended allowable net bearing pressure for drilled footings bearing on the undisturbed natural clay at the recommended depth is 2,100 psf for dead load plus sustained live loads and 3,200 psf for total

dead plus live loads (including extreme wind load). These values should provide factors of safety of 3.0 and 2.0, respectively, against soil shear failure.

6.3.2 Uplift

The drilled footing foundations will be subjected to a maximum uplift force of 63.5 kips, based on the foundation details furnished by Bartlett-Cocke. Uplift capacity for a bell bottomed rigid pier can be determined from the expression:

$$Q_u = (CN_u + \gamma D) \times A$$

Where,
Q_u = Ultimate Uplift Capacity
C = Cohesion (C = 850 psf)
N_u = Uplift coefficient [analogous to the N_c (Coefficient of Bearing Capacity) = 5.53]
A = Area of the Bell
γ = Unit weight of soil and concrete (γ =135 pcf)
D = Depth of pier below final grade (10-ft)
F.S. = 2.0

For this project, we estimate the appropriate value of N_c would be on the order of about 5.53. Values of undrained shear strength are obtained from the field and laboratory testing. The allowable uplift capacity = Q_u/ F.S.

6.3.3 Lateral Resistance to Horizontal Loads

The lateral resistance of drilled and underreamed piers was analyzed using Broms Short Pile Method (ASCE, Soil Mechanics and Foundations Journal, March 1964). Based on a lateral load of 9 kips and a compressive axial force of 50.2 kips, we calculated a minimum pier embedment depth of 10-ft and a maximum bending moment of 74.0 ft-kips acting at a height of 5.3-ft above the base of the pier.

6.3.4 Footing Construction

The bell/shaft diameter ratio of underreamed footings should not be greater than three to reduce sloughing and caving potential. Based on observed conditions in the project borings, it should be possible to form stable underreams by designing the bells within the competent cohesive soils at the 10-ft depth.

It is frequently advisable in expansive soil environments to provide additional steel reinforcing in the shafts of the underreamed footings. The tension steel should extend the full length of the shaft and the underream. A steel quantity of 0.5% of the gross shaft area is usually sufficient.

If underreams cannot be completed because of local anomalies and/or sloughing, the contractor should be required to excavate to a depth specified by the Geotechnical Engineer and provide a straight-sided pier with the shaft diameter possibly equal to the design bell diameter. The bottom of each excavation should be cleaned before concrete placement. Concrete should be placed in underreamed or straight-sided footings immediately following drilling and inspection.

Water seepage is not anticipated during excavation of drilled piers. If water collects in excess of 1-in. depth at the bottom of the footing excavations, water should be pumped out prior to concrete placement or the concrete should be tremied into place. In no instance should the pier excavation be left open for more than two hours.

6.3.5 Estimated Footing Settlements

Total post construction settlements of less than 0.50-in. are anticipated for the individual drilled and underreamed footings placed using proper construction methods. Differential movements between any two adjacent column units are not expected to exceed 0.3-in. These estimates assume uniformly loaded foundations with pressures that are no greater than the recommended allowable net bearing pressures and that the foundations are designed and constructed in accordance with the recommendations provided in this report. In addition, these estimates assume that foundations will act as isolated foundations, that is, the clear spacing between adjacent foundations is great enough to significantly reduce the influence of adjacent foundations. The recommended clear spacing between underreams should be a minimum of one underream diameter for foundation design.

It should be pointed out that the performance of the foundations would be more sensitive to construction quality than soil-structure interaction. Monitoring of the footing installation by the Geotechnical Engineer or a representative is recommended.

6.3.6 Variations during Construction

The recommendation to consider drilled pier footings is based on the observed subsurface conditions encountered only at the boring locations; however, significant variations can occur over short horizontal distances. An experienced soil technician should be present during foundation installation to verify that the proper bearing stratum has been reached, the pier dimensions are as designed, and that the excavation is clean and dry before reinforcing steel and concrete placement. This exploration does not eliminate possible presence of zones within the subsurface stratigraphy that would not support pier construction.

6.4 Floor Slab Design

The natural clay soils within the upper 6 feet at this site possess high to very high shrink/swell potential with an average plasticity index of 63. Soils with plasticity indices greater than 20 can experience significant volume changes with variations in moisture content. It is generally accepted that a primary source of foundation and floor slab distress is movements associated with shrink/swell behavior of subgrade soils. It is therefore recommended that measures be incorporated into design of floor slabs to reduce the shrink/swell potential of the foundation soils.

This section provides two (2) options to mitigate the effects of shrink/swell potential of the foundation soils on floor slab design; 1) Structurally suspended floor slab, and 2) Ground- supported floor slab.

Any ground-supported floor slab scheme for this project placed on high plasticity cohesive soils with plasticity indices of more than 20 will incur some level of risk associated with shrink/swell movements. Selection of the appropriate floor slab option should be in accordance with the

owner's performance expectations and recommendations from a structural engineer. It should be realized that slab performance would depend largely on the subgrade soil properties. Properly designed and constructed floor slabs may experience distress from active or improperly prepared subgrade soils.

6.4.1 Structurally Suspended Floor Slab

One of the most successful techniques for the construction of floor slabs in expansive clay soils is to suspend the floor and grade beams above the clay subgrade leaving a void space (crawl space) such that the shrink-swell soil movements do not affect the floor. The floor loads are carried to columns and grade beams which are supported by foundations as previously described. The floor slab is either cast on void forms or constructed of precast elements with a topping slab. The foundation system is bearing at about 10-ft below grade where the impact of the seasonal moisture variations and shrink/swell movements are significantly reduced.

Although the initial construction cost is high, the foundation performance is generally good to excellent and long-term maintenance and/or remedial repair expense as compared to a ground-supported slab is much lower. It should also be noted that a suspended floor does not have the cost of thick select fill layers or other subgrade treatments. Some movement of the pier should be anticipated but should be on the order of less than ½ inch total and ¼ inch differential.

If the suspended floor technique is chosen, it is further recommended that the void space area be shaped (graded) to allow subfloor drainage to a low slump area where water can collect and be discharged to drains. This precaution is intended to prevent water which may inadvertently enter from the exterior or from a plumbing break from ponding inside the crawl space. The void space should also be properly ventilated if possible.

6.4.2 Ground-Supported Floor Slab

A ground supported floor slab could be constructed provided remedial methods are used to reduce the potential for shrink/swell movement to tolerable levels. The typical method of reducing the swell potential includes installation of a layer of non-expansive soil beneath the floor slab. This method has beneficial results but does not totally eliminate the potential for shrink/swell movements.

In order to reduce the shrink/swell movements to tolerable limits (about 1 inch or less), it is recommended that a minimum of 2 feet of non-expansive select structural fill be provided beneath the floor slab. We recommend that the 2 feet of non-expansive material consist of select sandy clay fill as described in section 6.2 of this report. The minimum fill thickness may be provided by undercutting the existing material and replacing it with select fill, raising the building pad with select fill, or a combination of these two alternatives. Structural select fill should extend full depth at least 2 feet beyond the perimeter of the building

It should be noted that these methods for reducing shrink/swell movements are designed for normal seasonal changes in soil moisture content of the subgraded soils. Excessive shrink/swell movements can be expected if increases in soil moisture content occur as a result of broken

water lines and sewer lines, improper drainage of surface water, shrubbery and trees planted near the foundation slab and excessive lawn on shrubbery irrigation

Due to the expansive nature of the subgrade soils at this site, special care should be taken not to allow the exposed subgrade soils to become extremely wet or extremely dry of the existing moisture content. Therefore, delays between excavation and fill placement should be avoided. If construction occurs during rainy weather and the exposed subgrade soils are allowed to become wet or saturated, removal and replacement of excessively soft, wet soils or lime-stabilization should be anticipated. The depth of undercutting should be determined in the field by the geotechnical engineer.

It is recommended that a vapor barrier such as polyethylene sheeting be provided beneath soil supported floor slabs. Adequate construction joints and reinforcement should be provided to reduce the potential for cracking of the floor slab due to differential movement and volume change in concrete.

7 LIMITATIONS AND DESIGN REVIEW

7.1 Limitations

This report has been prepared for the exclusive use of Bartlett Cocke General Contractors, and their design team for specific application to the construction of the referenced project at the aforementioned location in Jefferson County, Texas. Our report has been prepared in accordance with the generally accepted geotechnical engineering practice common to the local area. No other warranty, express or implied, is made.

The analyses and recommendations contained in this report are based on the data obtained from the referenced subsurface exploration. The borings indicated subsurface conditions only at the specific locations and times, and only to the depths penetrated. The borings do not necessarily reflect strata variations that may exist at other locations within the project site. The validity of the recommendations is based in part on assumptions about the stratigraphy made by the Geotechnical Engineer. Such assumptions may be confirmed only during earthwork and foundation installation. Our recommendations presented in this report must be re-evaluated if subsurface conditions during construction are different from those described in this report.

If any changes in the nature, design, or location of the project are planned, the conclusions and recommendations contained in this report should not be considered valid unless the changes are reviewed, and the conclusions modified or verified in writing by TWE. TWE is not responsible for any claims, damages, or liability associated with interpretation or reuse of the subsurface data or engineering analyses without the expressed written authorization of TWE.

7.2 Design Review

Review of the design and construction drawings as well as the specifications should be performed by TWE before release. The review is aimed at determining if the geotechnical design and construction recommendations contained in this report have been properly interpreted. Design review is not within the authorized scope of work for this study.

7.3 Construction Monitoring

Construction surveillance is recommended and has been assumed in preparing our recommendations. These field services are required to check for changes in conditions that may result in modifications to our recommendations. The quality of the construction practices will affect hangar foundation performance and should be monitored.

7.4 Closing Remarks

We appreciate the opportunity to be of service during this phase of the project, and we look forward to continuing our services during the construction phase and on future projects.

ILLUSTRATION

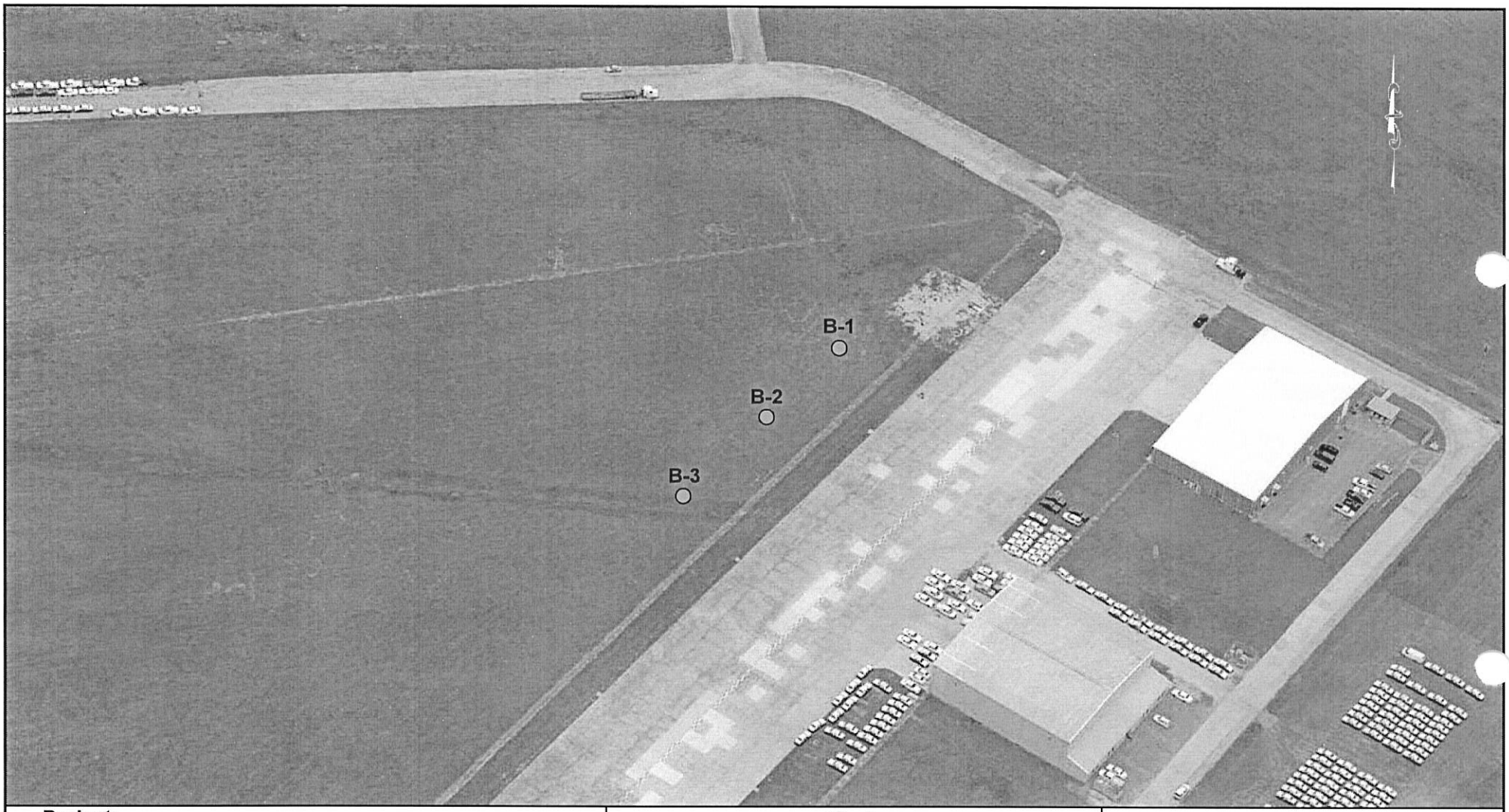

Project: SETRA Hangar No. 7 Jefferson County, Texas	Tolunay-Wong Engineers, Inc.	**Project No.** 09.23.110
Client: Bartlett Cocke General Contractors Houston, Texas	**Approximate Boring Locations**	**Figure: 1**

APPENDIX A

TWE PROJECT BORING LOGS (B-1 THRU B-3)
AND
KEY TO LOG TERMS AND SYMBOLS

LOG OF BORING B-1

PROJECT: SETRA Hangar No. 7
Jefferson County, Texas

CLIENT: Bartlett Cocke General Contractors
Houston, Texas

COORDINATES: N E
SURFACE ELEVATION:
DRILLING METHOD:
Dry Augered: 0' to 15'
Wash Bored: 15' to 30'

ELEVATION (FT) / DEPTH (FT)	SAMPLE TYPE	SYMBOL	MATERIAL DESCRIPTION	(P) POCKET PEN (tsf) (T) TORVANE (tsf)	STD. PENETRATION TEST BLOWCOUNT	MOISTURE CONTENT (%)	DRY UNIT WEIGHT (pcf)	LIQUID LIMIT (%)	PLASTICITY INDEX (%)	COMPRESSIVE STRENGTH (tsf)	FAILURE STRAIN (%)	CONFINING PRESSURE (psi)	PASSING #200 SIEVE (%)	OTHER TESTS PERFORMED
0			Fill: Stiff brown & reddish brown FAT CLAY (CH)	(P)2.25		27								
			Firm reddish brown & greenish gray FAT CLAY w/ SAND (CH), w/ ferrous nodules to 6'	(P)0.75		35	86	84	65	0.52	7			
5			-w/ calcareous nodules @ 4'-10'	(P)1.00		27							77	
			-w/ slickensides @ 6'-10'	(P)1.25		40								
			-becomes stiff	(P)1.50		40								
10			Stiff light gray & reddish brown LEAN CLAY w/ SAND (CL)	(P)2.50		22	101	41	28	1.38	13			
			-becomes tan & light gray	(P)1.50		21								
15														
			Medium dense reddish brown & tan SANDY SILT (ML)		9/6 11/6 16/6	29							64	
20														
			-becomes brown w/ clay pockets & seams		7/6 6/6 7/6									
25														
			Firm brown LEAN CLAY (CL) w/ silt partings & shell fragments	(P)1.25		29	99	40	23	0.81	5			
30			Bottom @ 30'											
35														

COMPLETION DEPTH: 30 ft
DATE BORING STARTED: 05/13/09
DATE BORING COMPLETED: 05/13/09
LOGGER: J. Parish
PROJECT NO.: 09.23.100

NOTES: Free water was not encountered during drilling. The borehole was set up wet due to sticking.

LOG OF BORING B-2

PROJECT: SETRA Hangar No. 7
Jefferson County, Texas

CLIENT: Bartlett Cocke General Contractors
Houston, Texas

COORDINATES: N E
SURFACE ELEVATION:
DRILLING METHOD:
Dry Augered: 0' to 15'
Wash Bored: 15' to 30'

ELEVATION (FT) / DEPTH (FT)	SAMPLE TYPE	SYMBOL	MATERIAL DESCRIPTION	(P) POCKET PEN (tsf) (T) TORVANE (tsf)	STD. PENETRATION TEST BLOWCOUNT	MOISTURE CONTENT (%)	DRY UNIT WEIGHT (pcf)	LIQUID LIMIT (%)	PLASTICITY INDEX (%)	COMPRESSIVE STRENGTH (tsf)	FAILURE STRAIN (%)	CONFINING PRESSURE (psi)	PASSING #200 SIEVE (%)	OTHER TESTS PERFORMED
0			Fill: Very stiff brown & reddish brown FAT CLAY (CH)	(P)3.25		29								
			-becomes stiff	(P)1.75		35							97	
5			Stiff reddish brown & greenish gray FAT CLAY (CH) w/ ferrous nodules to 6'	(P)2.00		33		72	53					
			-w/ calcareous nodules @ 6'-10'	(P)1.75		39	84			0.51	1			
			-w/ slickensides @ 6'-12'	(P)2.50		37								
10				(P)2.50		24		54	39					
15			Stiff reddish brown & greenish gray LEAN CLAY w/ SAND (CL)	(P)2.50		20								
20			Medium dense reddish brown & tan SILTY SAND (SM)		8/6 13/6 14/6	27								
25			-w/ clay pockets @ 23.5'-25'		6/6 12/6 7/6	27							35	
30			Firm brown LEAN CLAY (CL) w/ silt partings & shell fragments	(P)1.50		31	90			0.67	6			
			Bottom @ 30'											
35														

COMPLETION DEPTH: 30 ft
DATE BORING STARTED: 05/13/09
DATE BORING COMPLETED: 05/13/09
LOGGER: J. Parish
PROJECT NO.: 09.23.100

NOTES: Free water was not encountered during drilling. The borehole was set up wet due to sticking.

LOG OF BORING B-3

PROJECT: SETRA Hangar No. 7
Jefferson County, Texas

CLIENT: Bartlett Cocke General Contractors
Houston, Texas

COORDINATES: N E
SURFACE ELEVATION:
DRILLING METHOD:
Dry Augered: 0' to 20'
Wash Bored: 20' to 30'

ELEVATION (FT) / DEPTH (FT)	SAMPLE TYPE	SYMBOL	MATERIAL DESCRIPTION	(P) POCKET PEN (tsf) (T) TORVANE (tsf)	STD. PENETRATION TEST BLOWCOUNT	MOISTURE CONTENT (%)	DRY UNIT WEIGHT (pcf)	LIQUID LIMIT (%)	PLASTICITY INDEX (%)	COMPRESSIVE STRENGTH (tsf)	FAILURE STRAIN (%)	CONFINING PRESSURE (psi)	PASSING #200 SIEVE (%)	OTHER TESTS PERFORMED
0			Fill: Soft brown FAT CLAY (CH)	(P)2.00		32								
				(P)2.50		39		90	69					
			Firm reddish brown & greenish gray FAT CLAY (CH)	(P)0.50		33	92			0.77	7		95	
5			-w/ slickensides @ 6'-12'	(P)0.75		37								
			▼	(P)0.75		35								
10			-w/ calcareous nodules @ 10'-12' -becomes stiff	(P)2.50		27	94	68	49	1.09	4			
			Stiff tan & reddish brown LEAN CLAY w/ SAND (CL) -w/ silt partings & sand pockets @ 13'-17'	(P)2.00		22								
15			▽											
			Medium dense tan & reddish brown SILTY SAND (SM) -w/ clay seams & calcareous nodules @ 18.5'-20'		9/6 10/6 20/6	25							46	
20														
					10/6 13/6 14/6	29								
25														
			Stiff brown LEAN CLAY (CL) w/ silt partings & shell fragments	(P)1.50		34		48	31					
30			Bottom @ 30'											
35														

COMPLETION DEPTH: 30 ft
DATE BORING STARTED: 05/13/09
DATE BORING COMPLETED: 05/13/09
LOGGER: J. Parish
PROJECT NO.: 09.23.100

NOTES: Free water was encountered at the 17 ft. depth during drilling. The water level rose to the 8 ft. depth 15 min. after the initial reading.

SYMBOLS AND TERMS USED ON BORING LOGS

Most Common Unified Soil Classifications System Symbols

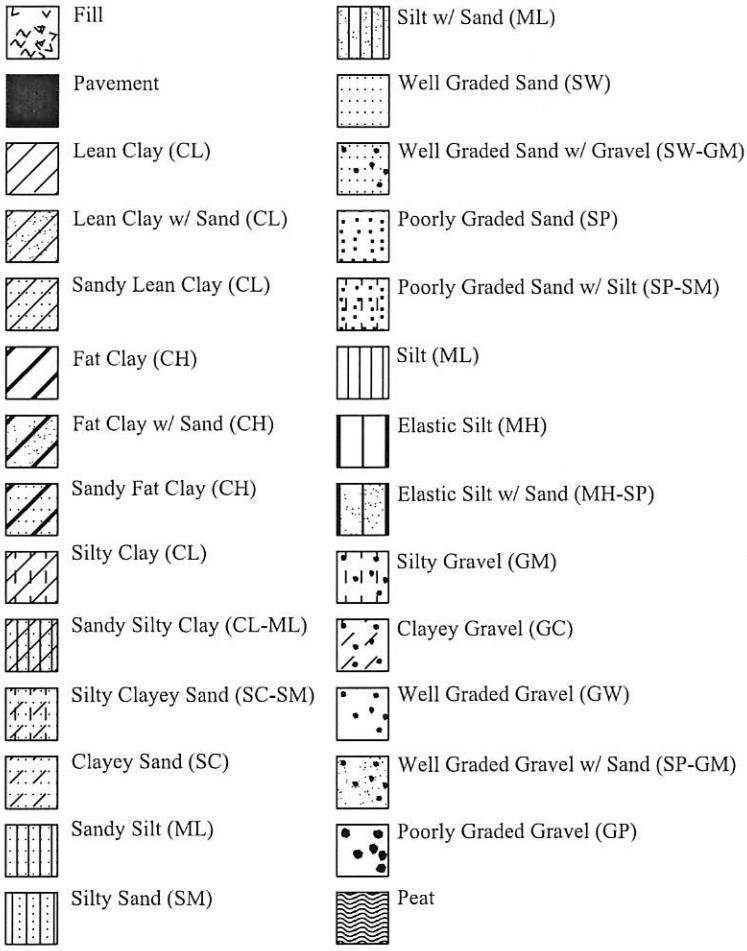

Sampler Symbols	Meaning
	Pavement core
	Thin - walled tube sample
	Standard Penetration Test (SPT)
	Auger sample
	Sampling attempt with no recovery
	TxDOT Cone Penetrometer Test

Field Test Data

2.50	Pocket penetrometer reading in tons per square foot
8/6"	Blow count per 6 - in. interval of the Standard Penetration Test
	Observed free water during drilling
	Observed static water level

Laboratory Test Data

Wc (%)	Moisture content in percent
Dens. (pcf)	Dry unit weight in pounds per cubic foot
Qu (tsf)	Unconfined compressive strength in tons per square foot
UU (tsf)	Compressive strength under confining pressure in tons per square foot
Str. (%)	Strain at failure in percent
LL	Liquid Limit in percent
PI	Plasticity Index
#200 (%)	Percent passing the No. 200 mesh sieve
( )	Confining pressure in pounds per square inch
*	Slickensided failure
**	Did not fail @ 15% strain

RELATIVE DENSITY OF COHESIONLESS & SEMI-COHESIONLESS SOILS

The following descriptive terms for relative density apply to cohesionless soils such as gravels, silty sands, and sands as well as semi-cohesive and semi-cohesionless soils such as sandy silts, and clayey sands.

Relative Density	Typical N_{60} Value Range*
Very Loose	0-4
Loose	5-10
Medium Dense	11-30
Dense	31-50
Very Dense	Over 50

* N_{60} is the number of blows from a 140-lb weight having a free fall of 30-in. required to penetrate the final 12-in. of an 18-in. sample interval, corrected for field procedure to an average energy ratio of 60% (Terzaghi, Peck, and Mesri, 1996).

CONSISTENCY OF COHESIVE SOILS

The following descriptive terms for consistency apply to cohesive soils such as clays, sandy clays, and silty clays.

Pocket Penetrometer (tsf)	Typical Compressive Strength (tsf)	Consistency	Typical SPT "N_{60}" Value Range**
pp < 0.50	qu < 0.25	Very soft	≤ 2
0.50 ≤ pp < 0.75	0.25 ≤ qu < 0.50	Soft	3-4
0.75 ≤ pp < 1.50	0.50 ≤ qu < 1.00	Firm	5-8
1.50 ≤ pp < 3.00	1.00 ≤ qu < 2.00	Stiff	9-15
3.00 ≤ pp < 4.50	2.00 ≤ qu < 4.00	Very Stiff	16-30
pp ≥ 4.50	qu ≥ 4.00	Hard	≥ 31

** An "N_{60}" value of 31 or greater corresponds to a hard consistency. The correlation of consistency with a typical SPT "N_{60}" value range is approximate.

Tolunay-Wong Engineers, Inc.

2455 West Cardinal Drive, Suite A • Beaumont, Texas 77705 • Phone: (409) 840-4214 • Fax: (409) 840-4259

August 11, 2017

LJA Engineering, Inc.
905 Orleans Street
Beaumont, Texas 77701

Attn: Mr. Heath Reynolds, P.E., Project Manager
hreynolds@lja.com

Ref: Geotechnical Report
Proposed Stiffened Slab-On-Grade Foundation
New Pre-Engineered Metal Building
Jack Brooks Regional Airport
Beaumont, Texas
TWE Project No. 17.23.097 / Report No. 92646

Dear Mr. Reynolds,

Tolunay-Wong Engineers, Inc. (TWE) is pleased to submit this report of our geotechnical engineering study performed for the above referenced project. This report contains our geotechnical recommendations for the proposed stiffened slab-on-grade foundation system to support the new pre-engineered metal building at the Jack Brooks Regional Airport in Beaumont, Texas. The geotechnical recommendations presented in this report are based on the subsurface conditions encountered at an adjacent project site during a previous geotechnical study performed under TWE Project No. 09.23.100 dated June, 2009.

Introduction

We understand, Jefferson County Sheriff's Office is proposing to construct a new 60-ft x 80-ft pre-engineered metal building adjacent to the existing to Hangar 7 (Philpott Hangar) at the Jack Brooks Regional Airport in Beaumont, Texas. Due to the close proximity of the proposed structure to the adjacent hangar, the Client is considering using the previous geotechnical investigation for Hangar 7 (TWE Project # 9.23.100, June, 2006) as a basis for foundation design for the new pre-engineered metal building at the referenced project site.

TWE was informed by the Client that that during installation of the proposed drilled and underreamed footings originally specified for the Hangar 7 project, sloughing of the shafts occurred due to slickensides and they could not be installed. As an alternate, TWE recommended a spread footing design in subsequent memos.

Based on the furnished information, the Hangar 7 building was 300-ft x 90-ft x 20-ft eave height. In comparison, the proposed sheriff's office hangar will be much smaller; approximately 60-ft x 80-ft x 18-ft eave height. From project documentation, Hangar 7 had column compressive reactions of 50-kips and column uplift reactions of 63.5-kips. The proposed structure will have compressive and uplift reactions in the range of 16-kips each.

We understand, the use of spread footing foundation system to support the proposed new metal building, following the recommendations provided in the referenced TWE report is not being considered by the Client since the installation of the spread footings would require a lot of labor intensive digging and forming with multiple concrete pours. Instead it is being considered to support the pre-engineered metal building on a stiffened slab-on-grade foundation with spread footings built into the grade beam intersections at the main frame column locations. The spread footings would be created by chamfering the corners of the subgrade at the grade beam intersections until enough plan area is obtained to get the actual maximum bearing pressure below the recommended allowable soil bearing pressure.

Shrink-Swell Potential

The tendency for a soil to shrink and swell with change in moisture content is a function of clay content and type. These properties are generally defined by the Atterberg Limits. The amount of expansion that will actually occur with increase in moisture content is inversely related to the overburden pressure. Therefore, the larger the overburden pressure, the smaller the amount of expansion. Near-surface soils are susceptible to shrink/swell behavior because they experience low amounts of overburden. Shrink/swell behavior is normally considered to be limited to the upper 6-ft of the various soil formations in this coastal zone of Texas. The presence of a water table will tend to keep the clays near the water table saturated and thus less likely to swell.

Based on the characteristics of soils encountered at the site during the referenced previous geotechnical investigation and as noted in the geotechnical report issued in June, 2009, pertaining to TWE Project No. 09.23.100, overall, the clay soils in the upper 6-ft at this site possess very high shrink/swell potential. Therefore relative lightly-loaded spread footings and slab-on-grade foundation systems constructed at this project site are susceptible to distress resulting from shrink-swell movements. Therefore the owner should be willing to accept some risk of damage from shrink-swell movements of the underlying soils. The risks associated with the use of slab-on-grade foundation systems and spread footings can however be significantly reduced provided certain considerations are addressed during the design and construction of the foundations as described in the following report sections. Based on our discussion with the Client, we understand the proposed stiffened slab-on-grade foundation system to be used to support the new building could withstand up to about 1.5-in of potential vertical movement due to expansive soils and the Client is willing to accept the associated risks.

Potential Vertical Rise

As stated earlier, the clay soils above 6-ft, lying above the expected groundwater table at this site possess very high shrink/swell potential. Considering the existing moisture conditions of the supporting soils encountered during the referenced field investigation, based on TxDOT Method TEX-124E, we estimated a potential vertical rise (PVR) at the base of the proposed slab-on-grade foundation to be about 3.5-in. We also estimated that 3-ft of soils beneath the slab-on-grade need to be removed and replaced with non-expansive structural fill soils, to reduce the PVR to be in the range of 1.5-in.

Shallow Foundation Design Considerations

Shallow foundation systems must satisfy two (2) independent design criteria with respect to soil conditions. The first criterion is that the system be designed with an appropriate factor of safety against bearing capacity failure of the soils underlying the foundations. The second criterion is that movement beneath the foundation system due to compression (consolidation) or expansion (swell) of the underlying soils must be within tolerable limits for the structure.

Spread Footings

Foundation Depth and Allowable Bearing Pressure

Based on the evaluation of PVR associated with potential shrink-swell movements of the shallow foundation system, we recommend the spread footings be placed in the natural clay soils at a minimum depth of 3-ft below existing grade. We expect the final grade will not be significantly different than the existing or final grade. The maximum allowable net bearing pressure for spread footings bearing on undisturbed natural soils at the recommended foundation depth is 1,000-psf. This allowable net soil bearing pressure includes a factor of safety of 3.0 against soil shear failure. If weak, soft, wet or otherwise unsuitable soils are encountered during construction at the recommended foundation depths, the unsuitable materials should be over-excavated, and replaced with properly-compacted structural fill materials or the foundation depth can be extended to the depth of competent soil.

Uplift Resistance

Resistance to vertical force (uplift) is provided by the weight of the concrete footing plus the weight of the soil directly above the footing. Based on the groundwater measurements at this site, we recommend the ultimate uplift resistance be based on total unit weights for soil and concrete of 120-pcf and 150-pcf, respectively. The calculated ultimate uplift resistance should be reduced by a factor of safety of 1.2 to calculate the allowable uplift resistance.

Lateral Resistance

Horizontal loads acting on spread footings will be resisted by passive earth pressure acting on one side of the footing and by base adhesion in cohesive soils (clays). An allowable passive pressure of 750-psf can be used for the natural clay soils or properly-compacted structural select fill material used as backfill around the footings. An allowable base adhesion of 375-psf can be used for footings in good contact with the proposed structural clay fill beneath the footing or with natural clay soils at the recommended/final depth of the footings.

Resistance to Overturning Moments

The contact pressure distribution of a spread footing subject to overturning moments will be trapezoidal. The design of the foundation should be such that full soil contact and positive pressure area are maintained under the foundation. In addition, the maximum foundation contact pressure should not exceed the allowable net bearing pressure of the foundation soil.

Settlement

Estimated settlement for the recommended spread footings placed at the recommended depth is based on our experience. This estimate assumes uniformly loaded foundations with pressures that are no greater than the recommended allowable net bearing pressures and assume the foundations are designed and constructed in accordance with the recommendations provided in this report. In addition, the estimates assume that foundations will act as isolated foundations and that the clear spacing between adjacent foundations is great enough to significantly reduce the influence of adjacent foundations.

Settlement of properly designed and installed spread footings is estimated to be on the order of about 1-in assuming a clear spacing between footings of at least the width of the larger adjacent footing. Differential settlement between spread footings could be on the order of about one-half (1/2) the total settlement. TWE can perform detailed settlement calculation upon request if information regarding the actual footing sizes and the bearing pressures are provided.

Stiffened Slab-On-Grade Foundation

We understand it is being considered to support the pre-engineered metal building on a stiffened slab-on-grade foundation with spread footings built into the grade beam intersections at the main frame column locations. The spread footings would be created by chamfering the corners of the subgrade at the grade beam intersections until enough plan area is obtained to get the actual maximum bearing pressure below the recommended allowable soil bearing pressure.

The proposed slab-on-grade should be supported on properly-prepared subgrade or properly-compacted structural select fill with the associated spread footings placed at a minimum depth of 3-ft below final grade. We recommend an allowable soil bearing capacity of 1,000-psf be used for design purposes. This allowable net bearing pressure includes a factor of safety of 3.0 against soil shear failure.

As discussed earlier, the typical method of reducing the swell potential includes installation of a layer of non-expansive soil beneath the slab. This method has beneficial results but does not totally eliminate the potential for shrink/swell movements. Based on our PVR estimation, in order to reduce the potential shrink/swell movements to tolerable limits (about 1.5-in for this project, as discussed before), it is recommended that a minimum of 3-ft of non-expansive select structural fill be provided beneath slab-on-grade.

Select structural fill for the project should consist of a clean sandy lean clay (CL) material with a liquid limit (LL) less than 40, plasticity index (PI) between 10 and 20, greater than 60% passing the No. 200 sieve and an organic content less than 4%. Select fill should be placed in thin lifts, moisture conditioned between -2% and +3% of optimum moisture content compacted to a minimum 95% of the maximum dry density as determined by the *Standard Test Method for Laboratory Compaction Characteristics of Soil using Standard Efforts (ASTM D 698).*

Prior to any filling operations, samples of the proposed fill materials should be obtained for laboratory moisture-density testing. The tests will provide a basis for evaluation of fill compaction by in-place density testing. A qualified soil technician should perform sufficient in-place density tests during the filling operations to verify that proper levels of compaction are being attained.

The minimum fill thickness may be provided by undercutting the existing material and replacing it with select fill, raising the foundation pad with select fill or a combination of these two (2) alternatives. Structural select fill should extend full depth at least 3-ft beyond the perimeter of the project structure.

It should be noted that these methods for reducing shrink/swell movements are designed for normal seasonal changes in soil moisture content of the subgrade soils. Excessive shrink/swell movements can be expected if increases in soil moisture content occur as a result of broken water and sewer lines, improper drainage of surface water, shrubbery and trees planted near the mausoleum slab and excessive lawn or shrubbery irrigation.

It is recommended that a vapor barrier such as polyethylene sheeting be provided beneath the soil-supported floor slab. Adequate construction joints and reinforcement should be provided to reduce the potential for cracking of the floor slab due to differential movement and volume change in concrete. We also recommend that the slab-on-grade, at a minimum, include a thickened edge around the perimeter to prevent desiccation and undermining of the foundation soils.

Shallow Foundation Construction

The performance of shallow foundation systems associated with the project will be highly dependent upon the quality of construction. Thus, it is recommended shallow foundation construction be monitored by a representative of the Geotechnical Engineer experienced in quality control testing and inspection procedures to help evaluate foundation construction.

Areas designated for shallow foundation construction should be stripped of all surface vegetation, loose topsoil and fill material. The exposed soil subgrade should then be proof-rolled with at least a 15-ton pneumatic roller, loaded dump truck or equivalent to detect weak areas. Such weak areas should be removed and replaced with properly-compacted structural fill material. Subsequent to proof-rolling, and just prior to placement of select fill, the exposed subgrade in foundation areas should be compacted to at least 95% of the maximum dry density near optimum (to +3%) in accordance with *Standard Proctor Compaction Efforts (ASTM D 698)* procedures.

Spread footings and grade beams could be either open-cut and formed or neatly-excavated. Excavations for shallow foundations should be made with a smooth-mouthed bucket or hand labor. Any loose or soft soils encountered during foundation excavation should be removed and replaced with select fill prior to form installation and steel placement. The soils exposed in excavations for shallow foundations should be protected from disturbance prior to and during foundation construction (2-in thick seal slab of lean concrete could be placed over the exposed soils). The need for protection will be most critical for large foundation excavations which are expected to remain open for more than one (1) working day.

If any of the foundations are formed, any voids between the footing and the excavation walls should be backfilled with cement-stabilized sand [one and one-half (1-1/2) sacks of cement per ton of sand] or flowable fill.

Select structural fill for the project should consist of a clean sandy lean clay (CL) material with a liquid limit (LL) less than 40, plasticity index (PI) between 10 and 20, greater than 60% passing the No. 200 sieve and an organic content less than 4%. Select fill should be placed in thin lifts, moisture conditioned between -2% and +3% of optimum moisture content and compacted to a minimum 95% of the maximum dry density as determined by the *Standard Test Method for Laboratory Compaction Characteristics of Soil using Standard Efforts (ASTM D 698).*

Granular soils such as sands and gravels are not recommended for use as select fill due to the potential to trap water. Excess water could result in softening of the bearing soils, causing a loss of support and possible heaving from soil swelling. It may be necessary to import select clay fill from off-site borrow sources. We recommend proposed sources of select fill or backfill soil be tested for compliance with the project specifications prior to use. In addition, it is imperative specific provisions be made to include testing of the actual fill and backfill soils delivered to the project site during construction to provide a level of quality assurance that the material specification requirements are maintained.

Prior to any filling or backfilling operations, samples of the proposed fill and backfill materials should be obtained for laboratory moisture-density testing. These tests will provide a basis for evaluation of fill and backfill compaction by in-place density testing. A representative of the Geotechnical Engineer should perform sufficient in-place density tests during the filling and backfilling operations to verify that proper levels of compaction are being attained. Maximum loose lift thicknesses for fill and backfill placement will depend on the type of compaction equipment used. Recommended fill layers are summarized in Table 1 below.

Table 1: Compaction Equipment and Maximum Lift Thickness

Compaction Equipment	Maximum Lift Thickness
Mechanical Hand Tamper	4-in
Pneumatic-Tired Roller	6-in
Tamping Foot Roller	8-in
Sheepsfoot Roller	8-in

Groundwater and Surface Water Control

The performance of the shallow foundation system for the proposed project structures will not only be dependent upon the quality of construction but also upon the stability of the moisture content of the near surface soils. Therefore, we highly recommend that site drainage be developed so that ponding of surface runoff near the structure does not occur. Accumulations of water near structure foundations may cause significant moisture variations in the soils adjacent to the foundation thus increasing the potential for structural distress.

Based on the groundwater measurements obtained from the project borings, shallow foundations constructed within this area at the recommended foundation depth should bear above the static groundwater level and we expect foundation excavations can be performed in the dry. Perched water into shallow foundation excavations, if encountered, should be pumped out and not allowed to deteriorate the foundation soils. If the quantities of water present cannot be controlled using sumps and pumps, a more rigorous method of groundwater control could be required. In addition, surface runoff could provide another source of water into the excavation. We recommend that adequate surface drainage away from the excavations be established to prevent surface runoff from flooding excavations during construction.

Open Excavation

The sides of open excavations are susceptible to deterioration upon exposure and may become unstable. The contractor's competent supervisor should inspect all excavations and take appropriate safety measures including the use of trench shields and sloped excavations. We recommend that OSHA standards be observed with all excavations.

Limitations

This report has been prepared for the exclusive use of LJA Engineering, Inc. for specific application to the proposed foundation system to support the new pre-engineered metal building at the Jack Brooks Regional Airport in Beaumont, Texas. This report has been prepared in accordance with generally-accepted geotechnical engineering practices common to the local area. No other warranty, express or implied, is made.

The analyses and recommendations contained in this report are based on the data obtained from the previously performed referenced subsurface explorations at the project site. The soil borings indicated subsurface conditions only at the specific locations and times performed and only to the depth penetrated. The soil borings do not necessarily reflect strata variations that may exist at other locations within the project site. The validity of the recommendations provided is based in part on assumptions about the stratigraphy made by the Geotechnical Engineer. Such assumptions may be confirmed only during earthwork and foundation installation. Our recommendations presented in this revised report must be re-evaluated if subsurface conditions during construction are different from those described in this report.

If any changes in the nature, design or location of the project are planned, the conclusions and recommendations contained in this report should not be considered valid unless the changes are reviewed and the conclusions modified or verified in writing by TWE. TWE is not responsible for any claims, damages or liability associated with interpretation or reuse of the subsurface data or engineering analyses without the expressed written authorization of TWE.

Construction Surveillance

Construction surveillance is recommended and has been assumed in preparing our recommendations. These field services are required to check for changes in conditions that may result in modifications to our recommendations. The quality of the construction practices will affect foundation performance and should be monitored.

Closing

We appreciate the opportunity to provide our services to this project. If you have any questions regarding this report or if we can be of further assistance, please contact us.

Sincerely,

TOLUNAY-WONG ENGINEERS, INC.
TBPE Firm Registration Number F-000124

Tyler G. Henneke, P.E.
Branch Manager
Beaumont, Texas

Jaideep Chatterjee

Jaideep Chatterjee, Ph.D., P.E.
Principal Engineer - Geotechnical
Houston, Texas

STATE OF TEXAS
JAIDEEP CHATTERJEE
111154
LICENSED
PROFESSIONAL ENGINEER
8/11/2017

JEFFERSON COUNTY ENGINEERING DEPARTMENT
JCSO HANGAR BUILDING

SECTION 311000 - SITE CLEARING

PART 1 - GENERAL

1.1 SUMMARY

A. This Section includes the following:

1. Protecting existing groundcovers and grass to remain.
2. Remove existing groundcovers and grass.
3. Clearing and grubbing.
4. Stripping and stockpiling topsoil.
5. Removing above- and below-grade site improvements.
6. Disconnecting and capping or sealing site utilities.
7. Temporary erosion and sedimentation control measures.

1.2 MATERIAL OWNERSHIP

A. Except for stripped topsoil or other materials indicated to remain Owner's property, cleared materials shall become Contractor's property and shall be removed from Project site.

1.3 PROJECT CONDITIONS

A. Traffic: Minimize interference with adjoining roads, streets, walks, and other adjacent occupied or used facilities during site-clearing operations.

1. Do not close or obstruct streets, walks, or other adjacent occupied or used facilities without permission from Owner and authorities having jurisdiction.
2. Provide alternate routes around closed or obstructed traffic ways if required by authorities having jurisdiction.

B. Salvable Improvements: Carefully remove items indicated to be salvaged and store on Owner's premises where indicated.

C. Utility Locator Service: Notify utility locator service for area where Project is located before site clearing.

D. Do not commence site clearing operations until temporary erosion and sedimentation control measures are in place.

PART 2 - PRODUCTS

2.1 SOIL MATERIALS

A. Satisfactory Soil Materials: Requirements for satisfactory soil materials are specified in Division 31 Section "Earth Moving."

1. Obtain approved borrow soil materials off-site when satisfactory soil materials are not available on-site.

PART 3 - EXECUTION

3.1 PREPARATION

A. Protect and maintain benchmarks and survey control points from disturbance during construction.

B. Protect existing site improvements to remain from damage during construction.

1. Restore damaged improvements to their original condition, as acceptable to Owner.

3.2 TEMPORARY EROSION AND SEDIMENTATION CONTROL

A. Provide temporary erosion and sedimentation control measures to prevent soil erosion and discharge of soil-bearing water runoff or airborne dust to adjacent properties and walkways, according to a sediment and erosion control plan, specific to the site, that complies with EPA 832/R-92-005 or requirements of authorities having jurisdiction, whichever is more stringent.

B. Inspect, repair, and maintain erosion and sedimentation control measures during construction until permanent vegetation has been established.

C. Remove erosion and sedimentation controls and restore and stabilize areas disturbed during removal.

3.3 UTILITIES

A. Locate, identify, disconnect, and seal or cap off utilities indicated to be removed.

1. Arrange with utility companies to shut off indicated utilities.

B. Existing Utilities: Do not interrupt utilities serving facilities occupied by Owner or others unless permitted under the following conditions and then only after arranging to provide temporary utility services according to requirements indicated:

1. Notify Architect not less than two days in advance of proposed utility interruptions.
2. Do not proceed with utility interruptions without Architect's written permission.

C. Removal of underground utilities is included in Division 21, Division 22, Division 23, Division 26, Division 27 and Division 28 Sections covering site utilities.

3.4 CLEARING AND GRUBBING

A. Fill depressions caused by clearing and grubbing operations with satisfactory soil material unless further excavation or earthwork is indicated.

1. Place fill material in horizontal layers not exceeding a loose depth of 8 inches (200 mm), and compact each layer to a density equal to adjacent original ground.

3.5 TOPSOIL STRIPPING

A. Remove sod and grass before stripping topsoil.

B. Strip topsoil to whatever depths are encountered in a manner to prevent intermingling with underlying subsoil or other waste materials.

C. Stockpile topsoil materials away from edge of excavations without intermixing with subsoil. Grade and shape stockpiles to drain surface water. Cover to prevent windblown dust.

3.6 SITE IMPROVEMENTS

A. Remove existing above- and below-grade improvements as indicated and as necessary to facilitate new construction.

3.7 DISPOSAL

A. Disposal: Remove surplus soil material, unsuitable topsoil, obstructions, demolished materials, and waste materials including trash and debris, and legally dispose of them off Owner's property.

1. Separate recyclable materials produced during site clearing from other nonrecyclable materials. Store or stockpile without intermixing with other materials and transport them to recycling facilities.

END OF SECTION 311000

JEFFERSON COUNTY ENGINEERING DEPARTMENT
JCSO HANGAR BUILDING

SECTION 312000 - EARTH MOVING

PART 1 - GENERAL

1.1 SUMMARY

A. This Section includes the following:

1. Preparing subgrades for slabs-on-grade, pavements, lawns, and grasses.
2. Excavating and backfilling for buildings and structures.
3. Drainage course for slabs-on-grade.
4. Subbase course for concrete pavements.
5. Subbase course for asphalt paving.
6. Excavating and backfilling for utility trenches.

1.2 DEFINITIONS

A. Backfill: Soil material used to fill an excavation.

1. Initial Backfill: Backfill placed beside and over pipe in a trench, including haunches to support sides of pipe.
2. Final Backfill: Backfill placed over initial backfill to fill a trench.

B. Base Course: Course placed between the subbase course and hot-mix asphalt paving.

C. Bedding Course: Course placed over the excavated subgrade in a trench before laying pipe.

D. Borrow Soil: Satisfactory soil imported from off-site for use as fill or backfill.

E. Drainage Course: Course supporting the slab-on-grade that also minimizes upward capillary flow of pore water.

F. Excavation: Removal of material encountered above subgrade elevations and to lines and dimensions indicated.

1. Authorized Additional Excavation: Excavation below subgrade elevations or beyond indicated lines and dimensions as directed by Engineer. Authorized additional excavation and replacement material will be paid for according to Contract provisions changes in the Work.
2. Unauthorized Excavation: Excavation below subgrade elevations or beyond indicated lines and dimensions without direction by Engineer. Unauthorized excavation, as well as remedial work directed by Engineer, shall be without additional compensation.

G. Fill: Soil materials used to raise existing grades.

H. Structures: Buildings, footings, foundations, retaining walls, slabs, tanks, curbs, mechanical and electrical appurtenances, or other man-made stationary features constructed above or below the ground surface.

I. Subbase Course: Course placed between the subgrade and base course for hot-mix asphalt pavement, or course placed between the subgrade and a cement concrete pavement or a cement concrete or hot-mix asphalt walk.

J. Subgrade: Surface or elevation remaining after completing excavation, or top surface of a fill or backfill immediately below subbase, drainage fill, or topsoil materials.

K. Utilities: On-site underground pipes, conduits, ducts, and cables, as well as underground services within buildings.

1.3 PROJECT CONDITIONS

A. Existing Utilities: Do not interrupt utilities serving facilities occupied by Owner or others unless permitted in writing by Engineer and then only after arranging to provide temporary utility services according to requirements indicated.

PART 2 - PRODUCTS

2.1 SOIL MATERIALS

A. General: Provide borrow soil materials when sufficient satisfactory soil materials are not available from excavations.

B. Satisfactory Soils: ASTM D 2487 Soil Classification Groups GW, GP, GM, SW, SP, and SM, or a combination of these groups; free of rock or gravel larger than 3 inches in any dimension, debris, waste, frozen materials, vegetation, and other deleterious matter.

C. Unsatisfactory Soils: Soil Classification Groups GC, SC, CL, ML, OL, CH, MH, OH, and PT according to ASTM D 2487, or a combination of these groups.

1. Unsatisfactory soils also include satisfactory soils not maintained within 2 percent of optimum moisture content at time of compaction.

D. Subbase Material: Naturally or artificially graded mixture of natural or crushed gravel, crushed stone, and natural or crushed sand; ASTM D 2940; with at least 90 percent passing a 1-1/2-inch sieve and not more than 12 percent passing a No. 200 sieve.

E. Base Course: Naturally or artificially graded mixture of natural or crushed gravel, crushed stone, and natural or crushed sand; ASTM D 2940; with at least 95 percent passing a 1-1/2-inch sieve and not more than 8 percent passing a No. 200 sieve.

F. Engineered Fill: Naturally or artificially graded mixture of natural or crushed gravel, crushed stone, and natural or crushed sand; ASTM D 2940; with at least 90 percent passing a 1-1/2-inch sieve and not more than 12 percent passing a No. 200 sieve.

G. Bedding Course: Naturally or artificially graded mixture of natural or crushed gravel, crushed stone, and natural or crushed sand; ASTM D 2940; except with 100 percent passing a 1-inch sieve and not more than 8 percent passing a No. 200 sieve.

H. Drainage Course: Narrowly graded mixture of washed crushed stone, or crushed or uncrushed gravel; ASTM D 448; coarse-aggregate grading Size 57; with 100 percent passing a 1-1/2-inch sieve and 0 to 5 percent passing a No. 8 sieve.

2.2 ACCESSORIES

A. Warning Tape: Acid- and alkali-resistant polyethylene film warning tape manufactured for marking and identifying underground utilities, 6 inches wide and 4 mils thick, continuously inscribed with a description of the utility.

PART 3 - EXECUTION

3.1 PREPARATION

A. Protect structures, utilities, sidewalks, pavements, and other facilities from damage caused by settlement, lateral movement, undermining, washout, and other hazards created by earthwork operations.

B. Preparation of subgrade for earthwork operations including removal of vegetation, topsoil, debris, obstructions, and deleterious materials from ground surface is specified in Division 31 Section "Site Clearing."

C. Protect and maintain erosion and sedimentation controls, which are specified in Division 31 Section "Site Clearing." during earthwork operations.

3.2 EXCAVATION

A. Unclassified Excavation: Excavate to subgrade elevations regardless of the character of surface and subsurface conditions encountered. Unclassified excavated materials may include rock, soil materials, and obstructions. No changes in the Contract Sum or the Contract Time will be authorized for rock excavation or removal of obstructions.

1. If excavated materials intended for fill and backfill include unsatisfactory soil materials and rock, replace with satisfactory soil materials.

3.3 EXCAVATION FOR STRUCTURES

A. Excavate to indicated elevations and dimensions within a tolerance of plus or minus 1 inch. If applicable, extend excavations a sufficient distance from structures for placing

and removing concrete formwork, for installing services and other construction, and for inspections.

1. Excavations for Footings and Foundations: Do not disturb bottom of excavation. Excavate by hand to final grade just before placing concrete reinforcement. Trim bottoms to required lines and grades to leave solid base to receive other work.

3.4 EXCAVATION FOR WALKS AND PAVEMENTS

A. Excavate surfaces under walks and pavements to indicated lines, cross sections, elevations, and subgrades.

3.5 EXCAVATION FOR UTILITY TRENCHES

A. Excavate trenches to indicated gradients, lines, depths, and elevations.

B. Excavate trenches to uniform widths to provide the following clearance on each side of pipe or conduit. Excavate trench walls vertically from trench bottom to 12 inches higher than top of pipe or conduit, unless otherwise indicated.

1. Clearance: 12 inches each side of pipe or conduit.

C. Trench Bottoms: Excavate and shape trench bottoms to provide uniform bearing and support of pipes and conduit. Shape subgrade to provide continuous support for bells, joints, and barrels of pipes and for joints, fittings, and bodies of conduits. Remove projecting stones and sharp objects along trench subgrade.

1. Excavate trenches 6 inches deeper than elevation required in rock or other unyielding bearing material, 4 inches deeper elsewhere, to allow for bedding course.

3.6 SUBGRADE INSPECTION

A. Proof-roll subgrade below the building slabs and pavements with heavy pneumatic-tired equipment to identify soft pockets and areas of excess yielding. Do not proof-roll wet or saturated subgrades.

B. Reconstruct subgrades damaged by freezing temperatures, frost, rain, accumulated water, or construction activities, as directed by Engineer, without additional compensation.

3.7 UNAUTHORIZED EXCAVATION

A. Fill unauthorized excavation under foundations or wall footings by extending bottom elevation of concrete foundation or footing to excavation bottom, without altering top elevation. Lean concrete fill, with 28-day compressive strength of 2500 psi, may be used when approved by Engineer.

1. Fill unauthorized excavations under other construction or utility pipe as directed by Engineer.

3.8 STORAGE OF SOIL MATERIALS

A. Stockpile borrow soil materials and excavated satisfactory soil materials without intermixing. Place, grade, and shape stockpiles to drain surface water. Cover to prevent windblown dust.

1. Stockpile soil materials away from edge of excavations. Do not store within drip line of remaining trees.

3.9 UTILITY TRENCH BACKFILL

A. Place backfill on subgrades free of mud, frost, snow, or ice.

B. Place and compact bedding course on trench bottoms and where indicated. Shape bedding course to provide continuous support for bells, joints, and barrels of pipes and for joints, fittings, and bodies of conduits.

C. Place and compact initial backfill of subbase material, free of particles larger than 1 inch in any dimension, to a height of 12 inches over the utility pipe or conduit.

1. Carefully compact initial backfill under pipe haunches and compact evenly up on both sides and along the full length of utility piping or conduit to avoid damage or displacement of piping or conduit. Coordinate backfilling with utilities testing.

D. Place and compact final backfill of satisfactory soil to final subgrade elevation.

E. Install warning tape directly above utilities, 12 inches below finished grade, except 6 inches below subgrade under pavements and slabs.

3.10 SOIL FILL

A. Plow, scarify, bench, or break up sloped surfaces steeper than 1 vertical to 4 horizontal so fill material will bond with existing material.

B. Place and compact fill material in layers to required elevations as follows:

1. Under grass and planted areas, use satisfactory soil material.
2. Under walks and pavements, use satisfactory soil material.
3. Under building slabs, use engineered fill.
4. Under footings and foundations, use engineered fill.

3.11 SOIL MOISTURE CONTROL

A. Uniformly moisten or aerate subgrade and each subsequent fill or backfill soil layer before compaction to within 2 percent of optimum moisture content.

1. Do not place backfill or fill soil material on surfaces that are muddy, frozen, or contain frost or ice.
2. Remove and replace, or scarify and air dry otherwise satisfactory soil material that exceeds optimum moisture content by 2 percent and is too wet to compact to specified dry unit weight.

3.12 COMPACTION OF SOIL BACKFILLS AND FILLS

A. Place backfill and fill soil materials in layers not more than 8 inches in loose depth for material compacted by heavy compaction equipment, and not more than 4 inches in loose depth for material compacted by hand-operated tampers.

B. Place backfill and fill soil materials evenly on all sides of structures to required elevations, and uniformly along the full length of each structure.

C. Compact soil materials to not less than the following percentages of maximum dry unit weight according to ASTM D 1557:

1. Under structures, building slabs, steps, and pavements, scarify and recompact top 12 inches of existing subgrade and each layer of backfill or fill soil material at 95 percent.
2. Under lawn or unpaved areas, scarify and recompact top 6 inches below subgrade and compact each layer of backfill or fill soil material at 85 percent.
3. For utility trenches, compact each layer of initial and final backfill soil material at 85 percent.

3.13 GRADING

A. General: Uniformly grade areas to a smooth surface, free of irregular surface changes. Comply with compaction requirements and grade to cross sections, lines, and elevations indicated.

B. Site Grading: Slope grades to direct water away from buildings and to prevent ponding. Finish subgrades to required elevations within the following tolerances:

1. Lawn or Unpaved Areas: Plus or minus 1 inch.
2. Pavements: Plus or minus 1/2 inch.

C. Grading inside Building Lines: Finish subgrade to a tolerance of 1/2 inch when tested with a 10-foot straightedge.

3.14 SUBBASE AND BASE COURSES

A. Place subbase course on subgrades free of mud, frost, snow, or ice.

B. On prepared subgrade, place subbase course under pavements and walks as follows:

1. Shape subbase course to required crown elevations and cross-slope grades.

2. Compact subbase course at optimum moisture content to required grades, lines, cross sections, and thickness to not less than 95 percent of maximum dry unit weight according to ASTM D 1557.

3.15 DRAINAGE COURSE

A. Place drainage course on subgrades free of mud, frost, snow, or ice.

B. On prepared subgrade, place and compact drainage course under cast-in-place concrete slabs-on-grade as follows:

1. Place drainage course that exceeds 6 inches in compacted thickness in layers of equal thickness, with no compacted layer more than 6 inches thick or less than 3 inches thick.
2. Compact each layer of drainage course to required cross sections and thicknesses to not less than 95 percent of maximum dry unit weight according to ASTM D 698.

3.16 FIELD QUALITY CONTROL

A. Testing Agency: Contractor will engage a qualified independent geotechnical engineering testing agency to perform field quality-control testing.

B. Allow testing agency to inspect and test subgrades and each fill or backfill layer. Proceed with subsequent earthwork only after test results for previously completed work comply with requirements.

C. Footing Subgrade: At footing subgrades, at least one test of each soil stratum will be performed to verify design bearing capacities. Subsequent verification and approval of other footing subgrades may be based on a visual comparison of subgrade with tested subgrade when approved by Engineer.

D. Testing agency will test compaction of soils in place according to ASTM D 1556, ASTM D 2167, ASTM D 2922, and ASTM D 2937, as applicable.

E. When testing agency reports that subgrades, fills, or backfills have not achieved degree of compaction specified, scarify and moisten or aerate, or remove and replace soil to depth required; recompact and retest until specified compaction is obtained.

3.17 PROTECTION

A. Protecting Graded Areas: Protect newly graded areas from traffic, freezing, and erosion. Keep free of trash and debris.

B. Repair and reestablish grades to specified tolerances where completed or partially completed surfaces become eroded, rutted, settled, or where they lose compaction due to subsequent construction operations or weather conditions.

C. Where settling occurs before Project correction period elapses, remove finished surfacing, backfill with additional soil material, compact, and reconstruct surfacing.

1. Restore appearance, quality, and condition of finished surfacing to match adjacent work, and eliminate evidence of restoration to greatest extent possible.

3.18 DISPOSAL OF SURPLUS AND WASTE MATERIALS

A. Disposal: Remove surplus satisfactory soil and waste material, including unsatisfactory soil, trash, and debris, and legally dispose of it off Owner's property.

PART 4 - MEASUREMENT AND PAYMENT

4.1 EARTHWORK

A. Measurement: No measurement for Earth work of this Section will be made.

B. Payment: Payment for Earth work of this Section will be made subsidiary to the lump sum (LS) amount for this project.

END OF SECTION 312000

JEFFERSON COUNTY ENGINEERING DEPARTMENT
JCSO HANGAR BUILDING

SECTION 312319 - DEWATERING

PART 1 - GENERAL

1.1 SUMMARY

A. Section includes construction dewatering.

1.2 PERFORMANCE REQUIREMENTS

A. Dewatering Performance: Design, furnish, install, test, operate, monitor, and maintain dewatering system of sufficient scope, size, and capacity to control hydrostatic pressures and to lower, control, remove, and dispose of ground water and permit excavation and construction to proceed on dry, stable subgrades.

1.3 SUBMITTALS

A. Shop Drawings: For dewatering system. Show arrangement, locations, and details of wells and well points; locations of risers, headers, filters, pumps, power units, discharge lines, piezometers, and flow-measuring devices; and means of discharge, control of sediment, and disposal of water.

1.4 QUALITY ASSURANCE

A. Regulatory Requirements: Comply with governing EPA notification regulations before beginning dewatering. Comply with hauling and disposal regulations of authorities having jurisdiction.

B. Preinstallation Conference: Conduct conference at Project site.

1.5 PROJECT CONDITIONS

A. Survey Work: Engage a qualified land surveyor or professional engineer to survey adjacent existing buildings, structures, and site improvements, establishing exact elevations at fixed points to act as benchmarks. Clearly identify benchmarks and record existing elevations.

1. During dewatering, regularly resurvey benchmarks, maintaining an accurate log of surveyed elevations for comparison with original elevations. Promptly notify Architect if changes in elevations occur or if cracks, sags, or other damage is evident in adjacent construction.

PART 2 - PRODUCTS (Not Used)

PART 3 - EXECUTION

3.1 INSTALLATION

A. Provide temporary grading to facilitate dewatering and control of surface water.

B. Monitor dewatering systems continuously.

C. Protect and maintain temporary erosion and sedimentation controls, which are specified in Division 31 Section "Site Clearing" during dewatering operations.

D. Install dewatering system utilizing wells, well points, or similar methods complete with pump equipment, standby power and pumps, filter material gradation, valves, appurtenances, water disposal, and surface-water controls.

1. Space well points or wells at intervals required to provide sufficient dewatering.
2. Use filters or other means to prevent pumping of fine sands or silts from the subsurface.

E. Before excavating below ground-water level, place system into operation to lower water to specified levels. Operate system continuously until drains, sewers, and structures have been constructed and fill materials have been placed or until dewatering is no longer required.

F. Provide an adequate system to lower and control ground water to permit excavation, construction of structures, and placement of fill materials on dry subgrades. Install sufficient dewatering equipment to drain water-bearing strata above and below bottom of foundations, drains, sewers, and other excavations.

1. Do not permit open-sump pumping that leads to loss of fines, soil piping, subgrade softening, and slope instability.

G. Reduce hydrostatic head in water-bearing strata below subgrade elevations of foundations, drains, sewers, and other excavations.

1. Maintain piezometric water level a minimum of 24 inches below surface of excavation.

H. Provide standby equipment on site, installed and available for immediate operation, to maintain dewatering on continuous basis if any part of system becomes inadequate or fails. If dewatering requirements are not satisfied due to inadequacy or failure of dewatering system, restore damaged structures and foundation soils at no additional expense to Owner.

1. Remove dewatering system from Project site on completion of dewatering. Plug or fill well holes with sand or cut off and cap wells a minimum of 36 inches below overlying construction.

END OF SECTION 312319

SECTION 313116 - TERMITE CONTROL

PART 1 - GENERAL

1.1 SUMMARY

A. This Section includes the following:

1. Soil treatment with termiticide.

1.2 SUBMITTALS

A. Product Data: For each type of product indicated. Include the EPA-Registered Label.

B. Product certificates.

C. Soil Treatment Application Report: Include the following:

1. Date and time of application.
2. Moisture content of soil before application.
3. Brand name and manufacturer of termiticide.
4. Quantity of undiluted termiticide used.
5. Dilutions, methods, volumes, and rates of application used.
6. Areas of application.
7. Water source for application.

1.3 QUALITY ASSURANCE

A. Installer Qualifications: A specialist who is licensed according to regulations of authorities having jurisdiction to apply termite control treatment and products in jurisdiction where Project is located.

B. Regulatory Requirements: Formulate and apply termiticides according to the EPA-Registered Label.

1.4 WARRANTY

A. Special Warranty: Manufacturer's standard form, signed by Applicator and Contractor certifying that termite control work, consisting of applied soil termiticide treatment, will prevent infestation of subterranean termites. If subterranean termite activity or damage is discovered during warranty period, re-treat soil and repair or replace damage caused by termite infestation.

1. Warranty Period: Five years from date of Substantial Completion.

PART 2 - PRODUCTS

2.1 MANUFACTURERS

A. Available Manufacturers: Subject to compliance with requirements, manufacturers offering products that may be incorporated into the Work include, but are not limited to, the following:

1. Termiticides:

a. Aventis Environmental Science USA LP; Termidor.
b. Bayer Corporation; Premise 75.
c. Dow AgroSciences LLC; Dursban TC.
d. FMC Corporation, Agricultural Products Group; Prevail FT.
e. Syngenta; Demon TC.

2.2 SOIL TREATMENT

A. Termiticide: Provide an EPA-registered termiticide complying with requirements of authorities having jurisdiction, in an aqueous solution formulated to prevent termite infestation. Provide quantity required for application at the label volume and rate for the maximum termiticide concentration allowed for each specific use, according to product's EPA-Registered Label.

PART 3 - EXECUTION

3.1 PREPARATION

A. General: Remove all extraneous sources of wood cellulose and other edible materials such as wood debris, tree stumps and roots, stakes, formwork, and construction waste wood from soil within and around foundations.

B. Soil Treatment Preparation: Loosen, rake, and level soil to be treated except previously compacted areas under slabs and footings. Termiticides may be applied before placing compacted fill under slabs if recommended in writing by termiticide manufacturer.

3.2 APPLYING SOIL TREATMENT

A. Application: Mix soil treatment termiticide solution to a uniform consistency. Provide quantity required for application at the label volume and rate for the maximum specified concentration of termiticide, according to manufacturer's EPA-Registered Label, to the following so that a continuous horizontal and vertical termiticidal barrier or treated zone is established around and under building construction. Distribute treatment evenly.

1. Slabs-on-Grade: Underground-supported slab construction, including footings, building slabs, and attached slabs as an overall treatment. Treat soil materials before concrete footings and slabs are placed.
2. Foundations: Adjacent soil including soil along the entire inside perimeter of foundation walls, along both sides of interior partition walls, around plumbing pipes and electric conduit penetrating the slab, and around interior column footers, piers, and chimney bases; also along the entire outside perimeter, from grade to bottom of footing. Avoid soil washout around footings.
3. Penetrations: At expansion joints, control joints, and areas where slabs will be penetrated.

B. Avoid disturbance of treated soil after application. Keep off treated areas until completely dry.

C. Protect termiticide solution, dispersed in treated soils and fills, from being diluted until ground-supported slabs are installed. Use waterproof barrier according to EPA-Registered Label instructions.

D. Post warning signs in areas of application.

E. Reapply soil treatment solution to areas disturbed by subsequent excavation, grading, landscaping, or other construction activities following application.

END OF SECTION 313116

JEFFERSON COUNTY ENGINEERING DEPARTMENT
JCSO HANGAR BUILDING

SECTION 321313 - CONCRETE PAVING

PART 1 - GENERAL

1.1 SUMMARY

A. This Section includes exterior cement concrete pavement for the following:

1. Driveways and roadways.
2. Parking lots.
3. Curbs and gutters.
4. Walkways.

1.2 SUBMITTALS

A. Product Data: For each type of product indicated.

B. Design Mixtures: For each concrete pavement mixture.

1.3 QUALITY ASSURANCE

A. Manufacturer Qualifications: Manufacturer of ready-mixed concrete products who complies with ASTM C 94/C 94M requirements for production facilities and equipment.

B. ACI Publications: Comply with ACI 301, "Specification for Structural Concrete," unless modified by requirements in the Contract Documents.

PART 2 - PRODUCTS

2.1 STEEL REINFORCEMENT

A. Plain-Steel Welded Wire Reinforcement: ASTM A 185, fabricated from as-drawn steel wire into flat sheets.

B. Deformed-Steel Welded Wire Reinforcement: ASTM A 497, flat sheet.

C. Reinforcing Bars: ASTM A 615/A 615M, Grade 60; deformed.

D. Plain Steel Wire: ASTM A 82, as drawn.

E. Deformed-Steel Wire: ASTM A 496.

F. Bar Supports: Bolsters, chairs, spacers, and other devices for spacing, supporting, and fastening reinforcing bars, welded wire reinforcement, and dowels in place. Manufacture bar supports according to CRSI's "Manual of Standard Practice."

2.2 CONCRETE MATERIALS

A. Cementitious Material: Use the following cementitious materials, of the same type, brand, and source throughout the Project:

1. Portland Cement: ASTM C 150, Type I/II. Supplement with the following:

a. Fly Ash: ASTM C 618, Class C or F.
b. Ground Granulated Blast-Furnace Slag: ASTM C 989, Grade 100 or 120.

B. Normal-Weight Aggregates: ASTM C 33, uniformly graded. Provide aggregates from a uniformly graded single source.

C. Water: ASTM C 94/C 94M.

D. Air-Entraining Admixture: ASTM C 260.

E. Chemical Admixtures: ASTM C 494/C 494M, of type suitable for application, certified by manufacturer to be compatible with other admixtures and to contain not more than 0.1 percent water-soluble chloride ions by mass of cementitious material.

2.3 FIBER REINFORCEMENT

A. Synthetic Fiber: Monofilament or fibrillated polypropylene fibers engineered and designed for use in concrete pavement, complying with ASTM C 1116, Type III, 1/2 to 1-1/2 inches long.

2.4 CURING MATERIALS

A. Absorptive Cover: AASHTO M 182, Class 2, burlap cloth.

B. Moisture-Retaining Cover: ASTM C 171, polyethylene film or white burlap-polyethylene sheet.

C. Water: Potable.

D. Evaporation Retarder: Waterborne, monomolecular film forming; manufactured for application to fresh concrete.

E. Clear Waterborne Membrane-Forming Curing Compound: ASTM C 309, Type 1, Class B, dissipating.

F. White Waterborne Membrane-Forming Curing Compound: ASTM C 309, Type 2, Class B.

2.5 RELATED MATERIALS

A. Expansion- and Isolation-Joint-Filler Strips: ASTM D 1751, asphalt-saturated cellulosic fiber.

B. Pavement-Marking Paint: Latex, waterborne emulsion, lead and chromate free, ready mixed, complying with FS TT-P-1952, with drying time of less than 3 minutes.

2.6 WHEEL STOPS

A. Wheel Stops: Precast, air-entrained concrete.

1. Dowels: Galvanized steel, 3/4-inch diameter, 10-inch minimum length.

2.7 CONCRETE MIXTURES

A. Prepare design mixtures, proportioned according to ACI 301, with the following properties:

1. Compressive Strength (28 Days): 3000 psi.
2. Maximum Water-Cementitious Materials Ratio at Point of Placement: 0.40.
3. Slump Limit: 4 inches, plus or minus 1 inch.
4. Air Content: 4-1/2 percent plus or minus 1.5 percent.

B. Synthetic Fiber: Uniformly disperse in concrete mix at manufacturer's recommended rate, but not less than 1.0 lb/cu. yd.

C. Color Pigment: Add color pigment to concrete mixture according to manufacturer's written instructions.

2.8 CONCRETE MIXING

A. Ready-Mixed Concrete: Measure, batch, and mix concrete materials and concrete according to ASTM C 94/C 94M and ASTM C 1116. Furnish batch certificates for each batch discharged and used in the Work.

PART 3 - EXECUTION

3.1 EXAMINATION

A. Proof-roll prepared subbase surface below concrete pavements with heavy pneumatic-tired equipment to identify soft pockets and areas of excess yielding.

3.2 EDGE FORMS AND SCREED CONSTRUCTION

A. Set, brace, and secure edge forms, bulkheads, and intermediate screed guides for pavement to required lines, grades, and elevations. Install forms to allow continuous progress of work and so forms can remain in place at least 24 hours after concrete placement.

B. Clean forms after each use and coat with form-release agent to ensure separation from concrete without damage.

3.3 STEEL REINFORCEMENT

A. General: Comply with CRSI's "Manual of Standard Practice" for fabricating, placing, and supporting reinforcement.

3.4 JOINTS

A. General: Form construction, isolation, and contraction joints and tool edgings true to line with faces perpendicular to surface plane of concrete. Construct transverse joints at right angles to centerline, unless otherwise indicated.

B. Construction Joints: Set construction joints at side and end terminations of pavement and at locations where pavement operations are stopped for more than one-half hour unless pavement terminates at isolation joints.

C. Isolation Joints: Form isolation joints of preformed joint-filler strips abutting concrete curbs, catch basins, manholes, inlets, structures, walks, other fixed objects, and where indicated.

D. Contraction Joints: Form weakened-plane contraction joints, sectioning concrete into areas as indicated. Construct contraction joints for a depth equal to at least one-fourth of the concrete thickness to match jointing of existing adjacent concrete pavement.

E. Edging: Tool edges of pavement, gutters, curbs, and joints in concrete after initial floating with an edging tool to a 1/4-inch radius. Repeat tooling of edges after applying surface finishes. Eliminate tool marks on concrete surfaces.

3.5 CONCRETE PLACEMENT

A. Moisten subbase to provide a uniform dampened condition at time concrete is placed.

B. Comply with ACI 301 requirements for measuring, mixing, transporting, and placing concrete.

C. Deposit and spread concrete in a continuous operation between transverse joints. Do not push or drag concrete into place or use vibrators to move concrete into place.

D. Screed pavement surfaces with a straightedge and strike off.

E. Commence initial floating using bull floats or darbies to impart an open textured and uniform surface plane before excess moisture or bleed water appears on the surface. Do not further disturb concrete surfaces before beginning finishing operations or spreading surface treatments.

3.6 FLOAT FINISHING

A. General: Do not add water to concrete surfaces during finishing operations.

B. Float Finish: Begin the second floating operation when bleed-water sheen has disappeared and concrete surface has stiffened sufficiently to permit operations. Float

surface with power-driven floats, or by hand floating if area is small or inaccessible to power units. Finish surfaces to true planes. Cut down high spots and fill low spots. Refloat surface immediately to uniform granular texture.

1. Burlap Finish: Drag a seamless strip of damp burlap across float-finished concrete, perpendicular to line of traffic, to provide a uniform, gritty texture.
2. Medium-to-Fine-Textured Broom Finish: Draw a soft bristle broom across float-finished concrete surface perpendicular to line of traffic to provide a uniform, fine-line texture.
3. Medium-to-Coarse-Textured Broom Finish: Provide a coarse finish by striating float-finished concrete surface 1/16 to 1/8 inch deep with a stiff-bristled broom, perpendicular to line of traffic.

C. Slip-Resistive Aggregate Finish: Before final floating, spread slip-resistive aggregate finish on pavement surface according to manufacturer's written instructions.

1. Cure concrete with curing compound recommended by slip-resistive aggregate manufacturer. Apply curing compound immediately after final finishing.
2. After curing, lightly work surface with a steel wire brush or abrasive stone and water to expose nonslip aggregate.

3.7 CONCRETE PROTECTION AND CURING

A. General: Protect freshly placed concrete from premature drying and excessive cold or hot temperatures.

B. Comply with ACI 306.1 for cold-weather protection.

C. Evaporation Retarder: Apply evaporation retarder to concrete surfaces if hot, dry, or windy conditions cause moisture loss approaching 0.2 lb/sq. ft. x h before and during finishing operations. Apply according to manufacturer's written instructions after placing, screeding, and bull floating or darbying concrete, but before float finishing.

D. Begin curing after finishing concrete but not before free water has disappeared from concrete surface.

E. Curing Methods: Cure concrete by moisture curing, moisture-retaining-cover curing, curing compound, or a combination of these methods.

3.8 PAVEMENT TOLERANCES

A. Comply with tolerances of ACI 117 and as follows:

1. Elevation: 1/4 inch.
2. Thickness: Plus 3/8 inch, minus 1/4 inch.
3. Surface: Gap below 10-foot- long, unleveled straightedge not to exceed 1/4 inch.
4. Joint Spacing: 3 inches.
5. Contraction Joint Depth: Plus 1/4 inch, no minus.
6. Joint Width: Plus 1/8 inch, no minus.

3.9 PAVEMENT MARKING

A. Allow concrete pavement to cure for 28 days and be dry before starting pavement marking.

B. Sweep and clean surface to eliminate loose material and dust.

C. Apply paint with mechanical equipment to produce pavement markings of dimensions indicated with uniform, straight edges. Apply at manufacturer's recommended rates to provide a minimum wet film thickness of 15 mils.

3.10 WHEEL STOPS

A. Securely attach wheel stops into pavement with not less than two galvanized steel dowels embedded in holes drilled or cast into wheel stops at one-quarter to one-third points. Firmly bond each dowel to wheel stop and to pavement. Securely install dowels into pavement and bond to wheel stop. Recess head of dowel beneath top of wheel stop.

3.11 REPAIRS AND PROTECTION

A. Remove and replace concrete pavement that is broken, damaged, or defective or that does not comply with requirements in this Section.

B. Protect concrete from damage. Exclude traffic from pavement for at least 14 days after placement.

C. Maintain concrete pavement free of stains, discoloration, dirt, and other foreign material. Sweep concrete pavement not more than two days before date scheduled for Substantial Completion inspections.

PART 4 - MEASUREMENT AND PAYMENT

4.1 CONCRETE PAVING

A. Measurement: No measurement for Concrete Paving work of this Section will be made.

B. Payment: Payment for Concrete Paving work of this Section will be made subsidiary to the lump sum (LS) amount for this project.

END OF SECTION 321313

JEFFERSON COUNTY ENGINEERING DEPARTMENT
JCSO HANGAR BUILDING

SECTION 321373 - CONCRETE PAVING JOINT SEALANTS

PART 1 - GENERAL

1.1 SUMMARY

A. This Section includes the following:

1. Expansion and contraction joints within cement concrete pavement.

1.2 SUBMITTALS

A. Product Data: For each type of product indicated.

B. Samples: For each type and color of joint sealant required.

C. Product certificates & test reports.

D. Compatibility and Adhesion Test Reports: From sealant manufacturer.

1.3 QUALITY ASSURANCE

A. Preconstruction Compatibility and Adhesion Testing: Submit samples of materials that will contact or affect joint sealants to joint-sealant manufacturers for testing according to ASTM C 1087 to determine whether priming and other specific joint preparation techniques are required to obtain rapid, optimum adhesion of joint sealants to joint substrates.

PART 2 - PRODUCTS

2.1 MANUFACTURERS

A. Products: Subject to compliance with requirements, provide one of the products listed in other Part 2 articles.

2.2 MATERIALS, GENERAL

A. Compatibility: Provide joint sealants, backing materials, and other related materials that are compatible with one another and with joint substrates under conditions of service and application, as demonstrated by joint-sealant manufacturer based on testing and field experience.

1. Primers: Product recommended by joint-sealant manufacturer where required for adhesion of sealant to joint substrates indicated, as determined from preconstruction joint-sealant-substrate tests and field tests.

B. Colors of Exposed Joint Sealants: As selected by Architect from manufacturer's full range.

2.3 COLD-APPLIED JOINT SEALANTS

A. Single-Component Jet-Fuel-Resistant Urethane Sealant for Concrete: Single-component, pourable, coal-tar-modified, urethane formulation complying with ASTM C 920 for Type S; Grade P; Class 25; Uses T, M, and, as applicable to joint substrates indicated, O.

1. Products:

a. Sonneborn, Div. of ChemRex, Inc.; Sonomeric SL-1.

2.4 JOINT-SEALANT BACKER MATERIALS

A. General: Provide joint-sealant backer materials that are nonstaining; are compatible with joint substrates, sealants, primers, and other joint fillers; and are approved for applications indicated by joint-sealant manufacturer based on field experience and laboratory testing.

B. Round Backer Rods for Cold- and Hot-Applied Sealants: ASTM D 5249, Type 1, of diameter and density required to control sealant depth and prevent bottom-side adhesion of sealant.

C. Backer Strips for Cold- and Hot-Applied Sealants: ASTM D 5249; Type 2; of thickness and width required to control sealant depth, prevent bottom-side adhesion of sealant, and fill remainder of joint opening under sealant.

D. Round Backer Rods for Cold-Applied Sealants: ASTM D 5249, Type 3, of diameter and density required to control sealant depth and prevent bottom-side adhesion of sealant.

PART 3 - EXECUTION

3.1 INSTALLATION

A. Surface Cleaning of Joints: Clean out joints immediately before installing joint sealants to comply with joint-sealant manufacturer's written instructions.

B. Joint Priming: Prime joint substrates where indicated or where recommended in writing by joint-sealant manufacturer, based on preconstruction joint-sealant-substrate tests or prior experience.

C. Sealant Installation Standard: Comply with recommendations in ASTM C 1193 for use of joint sealants as applicable to materials, applications, and conditions indicated.

D. Install backer materials to support sealants during application and at position required to produce optimum sealant movement capability. Do not leave gaps between ends of backer materials. Do not stretch, twist, puncture, or tear backer materials. Remove absorbent backer materials that have become wet before sealant application and replace them with dry materials.

E. Install sealants at the same time backings are installed to completely fill recesses provided for each joint configuration and to produce uniform, cross-sectional shapes and depths relative to joint widths that allow optimum sealant movement capability.

F. Tooling of Nonsag Sealants: Immediately after sealant application and before skinning or curing begins, tool sealants to form smooth, uniform beads of configuration indicated; to eliminate air pockets; and to ensure contact and adhesion of sealant with sides of joint.

G. Clean off excess sealants or sealant smears adjacent to joints as the Work progresses by methods and with cleaning materials approved by manufacturers of joint sealants and of products in which joints occur.

END OF SECTION 321373

JEFFERSON COUNTY ENGINEERING DEPARTMENT
JCSO HANGAR BUILDING

SECTION 330500 - COMMON WORK RESULTS FOR UTILITIES

PART 1 - GENERAL

1.1 SUMMARY

A. This Section includes the following:

1. Piping joining materials.
2. Sleeves.
3. Identification devices.
4. Grout.
5. Piping system common requirements.
6. Equipment installation common requirements.
7. Concrete bases.
8. Metal supports and anchorages.

1.2 DEFINITIONS

A. Exposed Installations: Exposed to view outdoors or subject to outdoor ambient temperatures and weather conditions.

B. Concealed Installations: Concealed from view and protected from weather conditions and physical contact by building occupants but subject to outdoor ambient temperatures. Examples include installations within unheated shelters.

1.3 SUBMITTALS

A. Product Data: For the following:

1. Dielectric fittings.
2. Identification devices.

1.4 QUALITY ASSURANCE

A. Comply with ASME A13.1 for lettering size, length of color field, colors, and viewing angles of identification devices.

PART 2 - PRODUCTS

2.1 PIPING JOINING MATERIALS

A. Pipe-Flange Gasket Materials: Suitable for chemical and thermal conditions of piping system contents.

1. ASME B16.21, nonmetallic, flat, asbestos free, 1/8-inch maximum thickness, unless otherwise indicated.

    a. Full-Face Type: For flat-face, Class 125, cast-iron and cast-bronze flanges.
    b. Narrow-Face Type: For raised-face, Class 250, cast-iron and steel flanges.

2. AWWA C110, rubber, flat face, 1/8 inch thick, unless otherwise indicated; and full-face or ring type, unless otherwise indicated.

B. Flange Bolts and Nuts: ASME B18.2.1, carbon steel, unless otherwise indicated.

C. Plastic, Pipe-Flange Gasket, Bolts, and Nuts: Type and material recommended by piping system manufacturer, unless otherwise indicated.

D. Solvent Cements for Joining Plastic Piping:

1. ABS Piping: ASTM D 2235.
2. CPVC Piping: ASTM F 493.
3. PVC Piping: ASTM D 2564. Include primer according to ASTM F 656.
4. PVC to ABS Piping Transition: ASTM D 3138.

E. Fiberglass Pipe Adhesive: As furnished or recommended by pipe manufacturer.

2.2 SLEEVES

A. Galvanized-Steel Sheet Sleeves: 0.0239-inch minimum thickness; round tube closed with welded longitudinal joint.

B. Steel Pipe Sleeves: ASTM A 53/A 53M, Type E, Grade B, Schedule 40, galvanized, plain ends.

C. Cast-Iron Sleeves: Cast or fabricated "wall pipe" equivalent to ductile-iron pressure pipe, with plain ends and integral waterstop, unless otherwise indicated.

D. Molded PVC Sleeves: Permanent, with nailing flange for attaching to wooden forms.

E. PVC Pipe Sleeves: ASTM D 1785, Schedule 40.

F. Molded PE Sleeves: Reusable, PE, tapered-cup shaped, and smooth outer surface with nailing flange for attaching to wooden forms.

2.3 IDENTIFICATION DEVICES

A. Equipment Nameplates: Metal permanently fastened to equipment with data engraved or stamped.

1. Data: Manufacturer, product name, model number, serial number, capacity, operating and power characteristics, labels of tested compliances, and essential data.

2. Location: Accessible and visible.

B. Pressure-Sensitive Pipe Markers: Manufacturer's standard preprinted, color-coded, pressure-sensitive-vinyl type with permanent adhesive.

C. Pipes with OD, Including Insulation, Less Than 6 Inches: Full-band pipe markers, extending 360 degrees around pipe at each location.

D. Pipes with OD, Including Insulation, 6 Inches and Larger: Either full-band or strip-type pipe markers, at least three times letter height and of length required for label.

E. Lettering: Use piping system terms indicated and abbreviate only as necessary for each application length.

1. Arrows: Either integrally with piping system service lettering to accommodate both directions of flow, or as separate unit on each pipe marker to indicate direction of flow.

F. Plastic Tape: Manufacturer's standard color-coded, pressure-sensitive, self-adhesive vinyl tape, at least 3 mils thick.

1. Width: 1-1/2 inches on pipes with OD, including insulation, less than 6 inches; 2-1/2 inches for larger pipes.
2. Color: Comply with ASME A13.1, unless otherwise indicated.

G. Valve Tags: Stamped or engraved with 1/4-inch letters for piping system abbreviation and 1/2-inch sequenced numbers. Include 5/32-inch hole for fastener.

1. Material: Provide valve tags made from one of the following materials:

a. 0.032-inch- thick, polished brass or aluminum.
b. 0.0375-inch- thick stainless steel.
c. 3/32-inch- thick plastic laminate with 2 black surfaces and a white inner layer.
d. Valve manufacturer's standard solid plastic.

2. Size: 1-1/2 inches in diameter, unless otherwise indicated.

H. Valve Tag Fasteners: Brass, wire-link or beaded chain; or brass S-hooks.

I. Engraved Plastic-Laminate Signs: ASTM D 709, Type I, cellulose, paper-base, phenolic-resin-laminate engraving stock; Grade ES-2, black surface, black phenolic core, with white melamine subcore, unless otherwise indicated. Fabricate in sizes required for message. Provide holes for mechanical fastening.

1. Engraving: Engraver's standard letter style, of sizes and with terms to match equipment identification.
2. Thickness: 1/16 inch, for units up to 20 sq. in. or 8 inches in length, and 1/8 inch for larger units.
3. Fasteners: Self-tapping, stainless-steel screws or contact-type permanent adhesive.

J. Plastic Equipment Markers: Manufacturer's standard laminated plastic, in the following color codes:

1. Green: Cooling equipment and components.
2. Yellow: Heating equipment and components.
3. Brown: Energy reclamation equipment and components.
4. Blue: Equipment and components that do not meet criteria above.
5. Hazardous Equipment: Use colors and designs recommended by ASME A13.1.
6. Terminology: Match schedules as closely as possible. Include the following:

   a. Name and plan number.
   b. Equipment service.
   c. Design capacity.
   d. Other design parameters such as pressure drop, entering and leaving conditions, and speed.

7. Size: 2-1/2 by 4 inches for control devices, dampers, and valves; 4-1/2 by 6 inches for equipment.

2.4 GROUT

A. Description: ASTM C 1107, Grade B, nonshrink and nonmetallic, dry hydraulic-cement grout.

1. Characteristics: Post hardening, volume adjusting, nonstaining, noncorrosive, nongaseous, and recommended for interior and exterior applications.
2. Design Mix: 5000-psi, 28-day compressive strength.
3. Packaging: Premixed and factory packaged.

PART 3 - EXECUTION

3.1 PIPING INSTALLATION

A. Drawing plans, schematics, and diagrams indicate general location and arrangement of piping systems. Indicated locations and arrangements were used to size pipe and calculate friction loss, expansion, pump sizing, and other design considerations. Install piping as indicated unless deviations to layout are approved on the Coordination Drawings.

B. Install piping indicated to be exposed and piping in equipment rooms and service areas at right angles or parallel to building walls. Diagonal runs are prohibited unless specifically indicated otherwise.

C. Install piping to permit valve servicing.

D. Install piping at indicated slopes.

E. Install piping free of sags and bends.

F. Install fittings for changes in direction and branch connections.

G. Select system components with pressure rating equal to or greater than system operating pressure.

H. Sleeves are not required for core-drilled holes.

I. Permanent sleeves are not required for holes formed by removable PE sleeves.

J. Install sleeves for pipes passing through concrete and masonry walls and concrete floor and roof slabs.

1. Cut sleeves to length for mounting flush with both surfaces.

a. Exception: Extend sleeves installed in floors of equipment areas or other wet areas 2 inches above finished floor level.

2. Install sleeves in new walls and slabs as new walls and slabs are constructed.

a. PVC Pipe Sleeves: For pipes smaller than NPS 6.
b. Steel Sheet Sleeves: For pipes NPS 6 and larger, penetrating gypsum-board partitions.

K. Verify final equipment locations for roughing-in.

L. Refer to equipment specifications in other Sections for roughing-in requirements.

3.2 PIPING JOINT CONSTRUCTION

A. Join pipe and fittings according to the following requirements and Division 33 Sections specifying piping systems.

B. Ream ends of pipes and tubes and remove burrs. Bevel plain ends of steel pipe.

C. Remove scale, slag, dirt, and debris from inside and outside of pipe and fittings before assembly.

D. Threaded Joints: Thread pipe with tapered pipe threads according to ASME B1.20.1. Cut threads full and clean using sharp dies. Ream threaded pipe ends to remove burrs and restore full ID. Join pipe fittings and valves as follows:

1. Apply appropriate tape or thread compound to external pipe threads unless dry seal threading is specified.
2. Damaged Threads: Do not use pipe or pipe fittings with threads that are corroded or damaged. Do not use pipe sections that have cracked or open welds.

E. Flanged Joints: Select appropriate gasket material, size, type, and thickness for service application. Install gasket concentrically positioned. Use suitable lubricants on bolt threads.

F. Grooved Joints: Assemble joints with grooved-end pipe coupling with coupling housing, gasket, lubricant, and bolts according to coupling and fitting manufacturer's written instructions.

G. Soldered Joints: Apply ASTM B 813 water-flushable flux, unless otherwise indicated, to tube end. Construct joints according to ASTM B 828 or CDA's "Copper Tube Handbook," using lead-free solder alloy (0.20 percent maximum lead content) complying with ASTM B 32.

H. Brazed Joints: Construct joints according to AWS's "Brazing Handbook," "Pipe and Tube" Chapter, using copper-phosphorus brazing filler metal complying with AWS A5.8.

I. Pressure-Sealed Joints: Assemble joints for plain-end copper tube and mechanical pressure seal fitting with proprietary crimping tool to according to fitting manufacturer's written instructions.

J. Plastic Piping Solvent-Cemented Joints: Clean and dry joining surfaces. Join pipe and fittings according to the following:

1. Comply with ASTM F 402 for safe-handling practice of cleaners, primers, and solvent cements.
2. ABS Piping: Join according to ASTM D 2235 and ASTM D 2661 appendixes.
3. CPVC Piping: Join according to ASTM D 2846/D 2846M Appendix.
4. PVC Pressure Piping: Join schedule number ASTM D 1785, PVC pipe and PVC socket fittings according to ASTM D 2672. Join other-than-schedule-number PVC pipe and socket fittings according to ASTM D 2855.
5. PVC Nonpressure Piping: Join according to ASTM D 2855.
6. PVC to ABS Nonpressure Transition Fittings: Join according to ASTM D 3138 Appendix.

K. Plastic Pressure Piping Gasketed Joints: Join according to ASTM D 3139.

L. Plastic Nonpressure Piping Gasketed Joints: Join according to ASTM D 3212.

M. Plastic Piping Heat-Fusion Joints: Clean and dry joining surfaces by wiping with clean cloth or paper towels. Join according to ASTM D 2657.

1. Plain-End PE Pipe and Fittings: Use butt fusion.
2. Plain-End PE Pipe and Socket Fittings: Use socket fusion.

N. Bonded Joints: Prepare pipe ends and fittings, apply adhesive, and join according to pipe manufacturer's written instructions.

3.3 PIPING CONNECTIONS

A. Make connections according to the following, unless otherwise indicated:

1. Install unions, in piping NPS 2 and smaller, adjacent to each valve and at final connection to each piece of equipment.

2. Install flanges, in piping NPS 2-1/2 and larger, adjacent to flanged valves and at final connection to each piece of equipment.
3. Install dielectric fittings at connections of dissimilar metal pipes.

3.4 EQUIPMENT INSTALLATION

A. Install equipment level and plumb, unless otherwise indicated.

B. Install equipment to facilitate service, maintenance, and repair or replacement of components. Connect equipment for ease of disconnecting, with minimum interference with other installations. Extend grease fittings to an accessible location.

C. Install equipment to allow right of way to piping systems installed at required slope.

3.5 IDENTIFICATION

A. Piping Systems: Install pipe markers on each system. Include arrows showing normal direction of flow.

1. Plastic markers, with application systems. Install on insulation segment if required for hot noninsulated piping.
2. Locate pipe markers on exposed piping according to the following:

    a. Near each valve and control device.
    b. Near each branch, excluding short takeoffs for equipment and terminal units. Mark each pipe at branch if flow pattern is not obvious.
    c. Near locations where pipes pass through walls or floors or enter inaccessible enclosures.
    d. At manholes and similar access points that permit view of concealed piping.
    e. Near major equipment items and other points of origination and termination.

B. Equipment: Install engraved plastic-laminate sign or equipment marker on or near each major item of equipment.

1. Lettering Size: Minimum 1/4 inch high for name of unit if viewing distance is less than 24 inches, 1/2 inch high for distances up to 72 inches, and proportionately larger lettering for greater distances. Provide secondary lettering two-thirds to three-fourths of size of principal lettering.
2. Text of Signs: Provide name of identified unit. Include text to distinguish among multiple units, inform user of operational requirements, indicate safety and emergency precautions, and warn of hazards and improper operations.

C. Adjusting: Relocate identifying devices that become visually blocked by work of this or other Divisions.

3.6 CONCRETE BASES

A. Concrete Bases: Anchor equipment to concrete base according to equipment manufacturer's written instructions and according to seismic codes at Project.

1. Construct concrete bases of dimensions indicated, but not less than 4 inches larger in both directions than supported unit.
2. Install dowel rods to connect concrete base to concrete floor. Unless otherwise indicated, install dowel rods on 18-inch centers around the full perimeter of base.
3. Install epoxy-coated anchor bolts for supported equipment that extend through concrete base, and anchor into structural concrete floor.
4. Place and secure anchorage devices. Use supported equipment manufacturer's setting drawings, templates, diagrams, instructions, and directions furnished with items to be embedded.
5. Install anchor bolts to elevations required for proper attachment to supported equipment.
6. Install anchor bolts according to anchor-bolt manufacturer's written instructions.
7. Use 4000-psi, 28-day compressive-strength concrete and reinforcement as specified in Division 03 Section "Cast-in-Place Concrete."

3.7 ERECTION OF METAL SUPPORTS AND ANCHORAGES

A. Refer to Division 05 Section "Metal Fabrications" for structural steel.

B. Cut, fit, and place miscellaneous metal supports accurately in location, alignment, and elevation to support and anchor piped utility materials and equipment.

3.8 GROUTING

A. Mix and install grout for equipment base bearing surfaces, pump and other equipment base plates, and anchors.

B. Clean surfaces that will come into contact with grout.

C. Provide forms as required for placement of grout.

D. Avoid air entrapment during placement of grout.

E. Place grout, completely filling equipment bases.

F. Place grout on concrete bases and provide smooth bearing surface for equipment.

G. Place grout around anchors.

H. Cure placed grout.

END OF SECTION 330500

JEFFERSON COUNTY ENGINEERING DEPARTMENT
JCSO HANGAR BUILDING

SECTION 330641 – REMOVING AND INSTALLING STORM DRAIN PIPE

PART 1 - GENERAL

1.1 SUMMARY

A. This Section includes the following:

1. Removal of existing storm drain pipe.
2. Transportation and cleaning of salvaged storm drain pipe.
3. Installation of new and/or salvaged storm drain pipe.

PART 2 - PRODUCTS

2.1 MATERIAL

A. Corrugated Metal Pipe in accordance with Division 33 Section “Corrugated Metal Pipe.” Pipe furnished may be new or salvaged or a combination of both.

PART 3 - EXEUCTION

3.1 REMOVAL

A. Storm drain pipe to be removed and reused will be shown on the plans.

B. Remove debris and sediment within the storm drain pipe.

C. Excavate, bed, and backfill in accordance with Division 31 Section “Earth Moving.” Prevent damage to the pipe and fittings.

D. If items designated for reuse are damaged by the Contractor, replace them with new material or restore them to previous condition, as approved. The Contractor may remove and dispose of existing structures and construct new structures at no expense to the Owner in accordance with pertinent specifications and designs shown on the plans or as approved.

3.2 TRANSPORTATION AND CLEANING

A. Mark the top and bottom of reinforced concrete pipe before removal and reinstall in the same position. If shown on the plans, reuse headwall, aprons, or other appurtenances by severing from the culvert and moving to the new position.

B. Clean joints to facilitate proper re-laying.

C. Use a coating of bituminous material in accordance with Division 33 Section “Corrugated Metal Pipe” to insulate portions of aluminum pipe that are to be in contact with metal other than aluminum. Extend coating 1 ft. minimum beyond area of contact.

3.3 INSTALLATION

A. Storm drain pipe to be installed will be shown on the plans.

B. Excavate, bed, and backfill in accordance with Division 31 Section “Earth Moving.”

C. Make connections for joining sections of pipes in accordance with pertinent Items.

D. Make connections to existing structures as shown on the plans and in conformance to the requirements for connections as described in pertinent pipe specifications.

E. Install corrugated metal pipe in accordance with Division 33 Section “Corrugated Metal Pipe.”

PART 4 - MEASUREMENT AND PAYMENT

4.1 STORM DRAIN INSTALLATION

A. Measurement: No measurement for Storm Drain Removal or Installation work of this Section will be made.

B. Payment: Payment for Storm Drain Removal and Installation work of this Section will be made subsidiary to the lump sum (LS) amount for this project.

END OF SECTION 330641

JCSO HANGAR BUILDING

JACK BROOKS REGIONAL AIRPORT

INDEX OF SHEETS

GENERAL

G1.01	COVER SHEET

CIVIL

C1.01	SITE PLAN
C1.02	PROPOSED GRADING AND PAVING PLAN
C1.03	HANGAR ACCESS DRIVE/PARKING JOINT PLAN
C1.04	HANGAR FOUNDATION PLAN
C1.05	HANGAR TAXI-WAY APRON JOINT PLAN
C1.06	HANGAR ACCESS DRIVE & TAXI-WAY APRON DETAILS
C1.07	HANGAR FOUNDATION DETAILS
C1.08	EXISTING NATURAL GRADE PLAN
C2.01	PROPOSED UTILITIES PLAN
C2.02	PROPOSED ELECTRICAL PLAN

ARCHITECTURAL

A2.01	FLOOR PLAN
A2.02	ENLARGED FLOOR PLAN
A2.03	ENLARGED FRAMING PLAN
A2.04	ENLARGED FRAMING PLAN, PLAN DETAILS & SECTIONS
A3.01	BUILDING ELEVATIONS
A7.01	REFLECTED CEILING PLAN
A7.02	ENLARGED REFLECTED CEILING PLAN

MECHANICAL

M2.01	FLOOR PLAN
M2.02	ENLARGED FLOOR PLAN
M2.03	CUT SHEETS
M2.04	CUT SHEETS

ELECTRICAL

EP2.01	FLOOR PLAN
EP2.02	ENLARGED FLOOR PLAN
EL7.01	REFLECTED CEILING PLAN
EL7.02	ENLARGED REFLECTED CEILING PLAN

PLUMBING

P2.01	FLOOR PLAN
P2.02	ENLARGED FLOOR PLAN

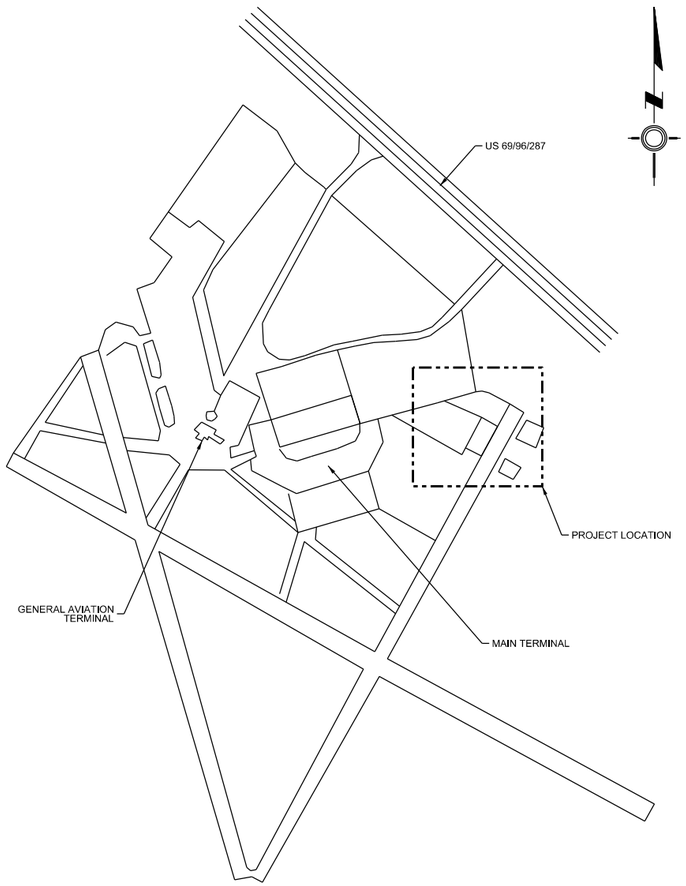

LOCATION MAP

PROJECT TEAM

CIVIL ENGINEER

HEATH REYNOLDS, P.E.
LJA ENGINEERING, INC.
905 ORLEANS STREET
BEAUMONT, TX 77701
(409) 813-1862

ARCHITECT

TONY EEDS (11498)
WHITE ROCK STUDIO
1407 SAN SABA DRIVE
DALLAS, TX 75218
(214) 763-0416
PROJECT NO. 221

STATE OF TEXAS · HEATH E. REYNOLDS · 113232 · LICENSED PROFESSIONAL ENGINEER

HEATH E. REYNOLDS, P.E. •113232

NO	LOC	DESCRIPTION OF REVISION	BY DATE	APPR DATE
4				
3				
2		REISSUED FOR CONSTRUCTION	JLG 8/23/17	HER 8/23/17
1		ISSUED FOR OWNER'S REVIEW	JLG 8/17/17	
0		ISSUED FOR CONSTRUCTION	JLG 2/17/17	

WORK ORDER NO.

Jefferson County Sheriff's Department

CONSTRUCTION DOCUMENTS
HANGAR BUILDING COVER SHEET
Southeast Texas Regional Airport
Jefferson County, Texas

DRAWN: JLG | SCALE: NTS | DATE: Dec 07, 2016
APPROVED: HER | CHECKED: JLG | NO. G1.01 | REV 2

The above drawings and specifications, and ideas, designs and arrangements represented thereby are and shall remain the property of the architect/engineers and no part thereof shall be copied, disclosed to others or used in connection with any other work or project other than the specific project for which they have been prepared and developed, without the written consent of the architect/engineers. Visual contact with these drawings and/or specifications shall constitute conclusive evidence of acceptance of these restrictions.

LJA Engineering, Inc.
Midstream Infrastructure
905 Orleans Street
Beaumont, Texas 77701
LJA Project No. B079-1013
Phone 409.813.1862
Fax 409.813.1916
FRN - F-1386

ISO PAGE
PAGE XX

G1.01

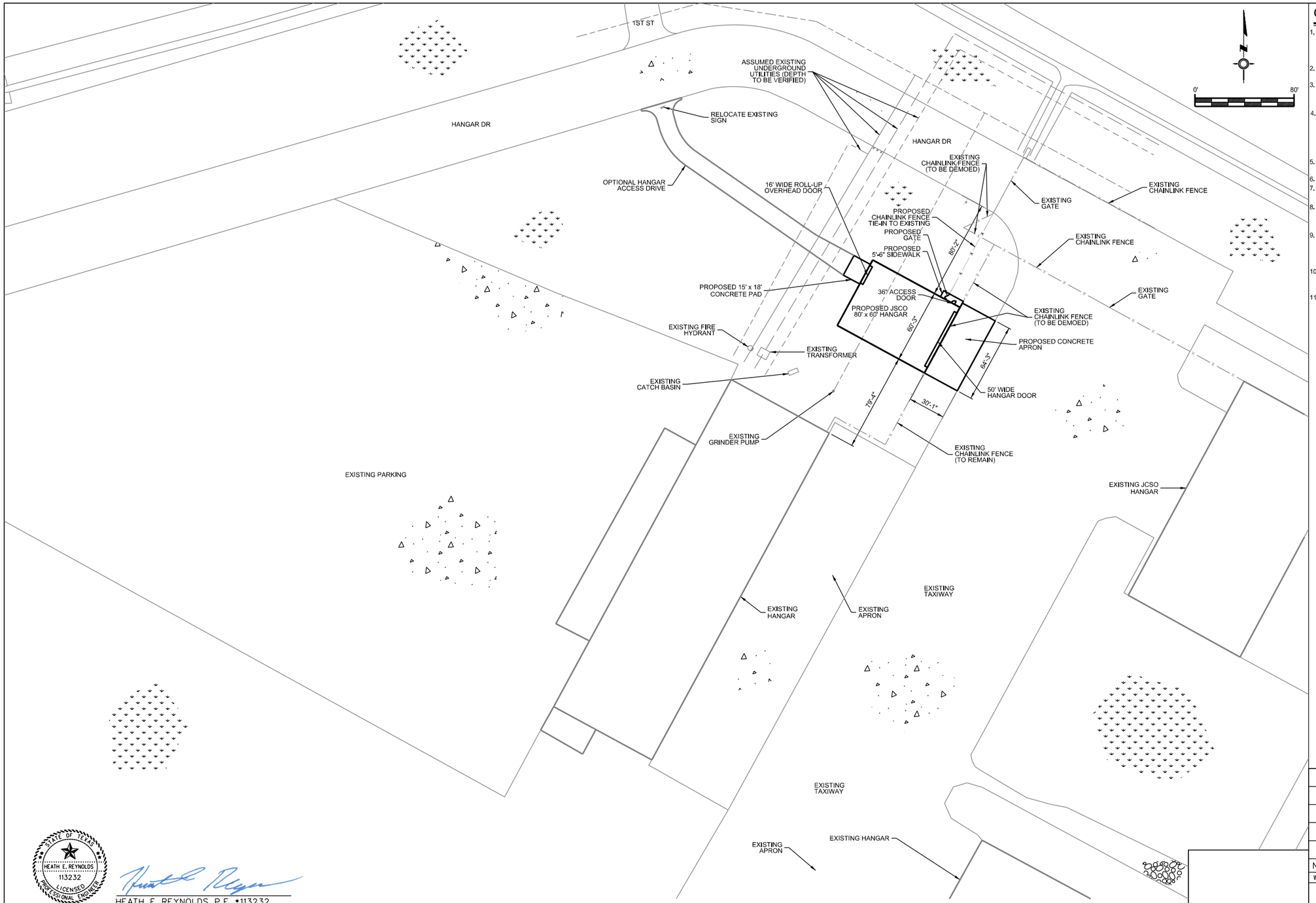

GENERAL NOTES

1. INSTALLATION SHALL COMPLY WITH ALL LOCAL, STATE AND FEDERAL CODES, ORDINANCES, LAWS, AND REGULATIONS THAT APPLY. INTERNATIONAL BUILDING CODE (IBC) GOVERNS IF NONE OF THE ABOVE ARE IN PLACE.
2. INSTALLATION, CURING, FINISHING, ETC. SHALL BE IN ACCORDANCE WITH ACI 302.1R-104
3. CONCRETE SHALL BE 3,000 P.S.I. 5 SACK MIX UNLESS OTHERWISE NOTED. DO NOT INCLUDE ANY ADMIXTURE WITHOUT OWNER'S PRIOR APPROVAL.
4. AFTER EXCAVATION, THE EXPOSED SUBGRADE SHALL BE PROOF ROLLED IN ACCORDANCE WITH TXDOT SPECIFICATION ITEM 216 TO LOCATE ANY SOFT OR LOOSE AREAS. AREAS FOUND TO DEFLECT UNDER LOAD SHOULD BE UNDERCUT AND REPLACED WITH PROPERLY COMPACTED STRUCTURAL FILL.
5. CONCRETE TO BE PLACED AS A SINGLE POUR UNLESS APPROVED BY LJA ENGINEERING, INC.
6. ALL REBAR IS TO BE SUPPORTED ON STANDARD SUPPORT CHAIRS.
7. SITE SHOULD BE SCARIFIED TO MINIMUM DEPTH OF SIX INCHES TO REMOVE ANY ORGANIC MATERIAL.
8. ANY ADDITIONAL FILL PLACED AT SITE SHOULD BE STRUCTURAL SELECT FILL AND COMPACTED IN SIX TO EIGHT INCH LIFTS TO 95% OF MAXIMUM DRY DENSITY.
9. ALL REINFORCEMENT SHALL BE GRADE 60 KSI. REINFORCEMENT SHALL HAVE MINIMUM COVERAGE OF 3" IN CONCRETE CAST DIRECTLY AGAINST EARTH, AND 1-1/2" OF COVERAGE EVERYWHERE ELSE.
10. SAWCUTS SHALL BE PERFORMED WITHIN 24 HOURS OF CONCRETE PLACEMENT AND SHALL EXTEND TO A DEPTH OF 25% OF THE SLAB THICKNESS.
11. AN INDEPENDENT TESTING LABORATORY SHALL PERFORM THE FOLLOWING TESTS ON CAST IN PLACE CONCRETE:
    A) ASTM C143 "STANDARD TEST FOR SLUMP OF PORTLAND CEMENT CONCRETE," ALL CONCRETE SHALL CONTAIN A MAXIMUM SLUMP OF 4" UNLESS THE CONTRACTOR USES A SUPERPLASTERCIZING ADMIXTURE.
    B) ASTM C39 "STANDARD TEST FOR COMPRESSIVE STRENGTH OF CYLINDRICAL CONCRETE SPECIMENS." A SEPARATE TEST SHALL BE CONDUCTED FOR EACH CLASS, FOR EVERY 50 CUBIC YARDS OR A FRACTION THEREOF, PLACED PER DAY. REQUIRED CYLINDER(S) QUANTITIES AND TEST AGE AS FOLLOWS;
       (1) AT 7 DAYS
       (2) AT 28 DAYS

    ONE ADDITIONAL RESERVE CYLINDER TO BE TESTED UNDER THE DIRECTION OF THE ENGINEER. IF REQUIRED, IF 28 DAY STRENGTH IS ACHIEVED, THE ADDITIONAL CYLINDER(S) MAY BE DISCARDED.

STATE OF TEXAS
HEATH E. REYNOLDS
113232
LICENSED
PROFESSIONAL ENGINEER

HEATH E. REYNOLDS, P.E. •113232

01 JCSO HANGAR BUILDING SITE PLAN - JACK BROOKS REGIONAL AIRPORT

SCALE: 1" = 80'-0"

NO	LOC	DESCRIPTION OF REVISION	BY DATE	APPR DATE
4				
3				
2		REISSUED FOR CONSTRUCTION	JLG 8/23/17	HER 8/23/17
1		ISSUED FOR OWNER'S REVIEW	JLG 8/17/17	
0		ISSUED FOR CONSTRUCTION	JLG 2/17/17	

WORK ORDER NO.

Jefferson County Sheriff's Department

CONSTRUCTION DOCUMENTS
HANGAR BUILDING SITE PLAN
Southeast Texas Regional Airport
Jefferson County, Texas

DRAWN: JLG | SCALE: 1" = 80'-0" | DATE: Aug 29, 2016
APPROVED: HER | CHECKED: JLG | NO. C1.01 | REV 2

The above drawings and specifications, and ideas, designs and arrangements represented thereby are and shall remain the property of the architect/engineers and no part thereof shall be copied, disclosed to others or used in connection with any other work or project other than the specific project for which they have been prepared and developed, without the written consent of the architect/engineers. Visual contact with these drawings and/or specifications shall constitute conclusive evidence of acceptance of these restrictions.

LJA Engineering, Inc.
Midstream Infrastructure
905 Orleans Street
Beaumont, Texas 77701
LJA Project No. B079-1013
Phone 409.813.1862
Fax 409.813.1916
FRN - F-1386

ISO PAGE
PAGE XX

C1.01

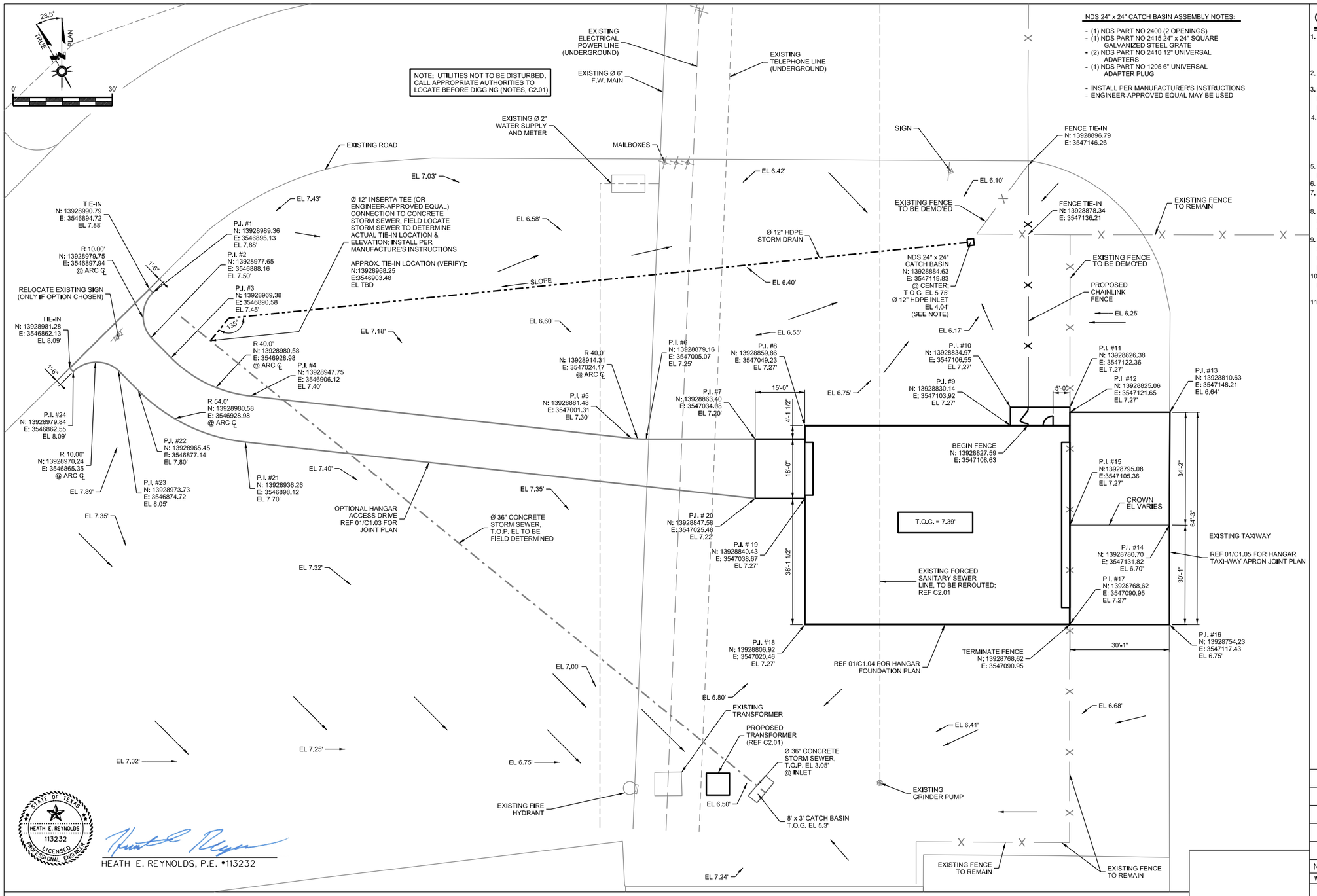

NDS 24" x 24" CATCH BASIN ASSEMBLY NOTES:

- (1) NDS PART NO 2400 (2 OPENINGS)
- (1) NDS PART NO 2415 24" x 24" SQUARE GALVANIZED STEEL GRATE
- (2) NDS PART NO 2410 12" UNIVERSAL ADAPTERS
- (1) NDS PART NO 1206 6" UNIVERSAL ADAPTER PLUG

- INSTALL PER MANUFACTURER'S INSTRUCTIONS
- ENGINEER-APPROVED EQUAL MAY BE USED

GENERAL NOTES

1. INSTALLATION SHALL COMPLY WITH ALL LOCAL, STATE AND FEDERAL CODES, ORDINANCES, LAWS, AND REGULATIONS THAT APPLY. INTERNATIONAL BUILDING CODE (IBC) GOVERNS IF NONE OF THE ABOVE ARE IN PLACE.
2. INSTALLATION, CURING, FINISHING, ETC. SHALL BE IN ACCORDANCE WITH ACI 302.1R-104
3. CONCRETE SHALL BE 3,000 P.S.I. 5 SACK MIX UNLESS OTHERWISE NOTED. DO NOT INCLUDE ANY ADMIXTURE WITHOUT OWNER'S PRIOR APPROVAL.
4. AFTER EXCAVATION, THE EXPOSED SUBGRADE SHALL BE PROOF ROLLED IN ACCORDANCE WITH TXDOT SPECIFICATION ITEM 216 TO LOCATE ANY SOFT OR LOOSE AREAS. AREAS FOUND TO DEFLECT UNDER LOAD SHOULD BE UNDERCUT AND REPLACED WITH PROPERLY COMPACTED STRUCTURAL FILL.
5. CONCRETE TO BE PLACED AS A SINGLE POUR UNLESS APPROVED BY LJA ENGINEERING, INC.
6. ALL REBAR IS TO BE SUPPORTED ON STANDARD SUPPORT CHAIRS.
7. SITE SHOULD BE SCARIFIED TO MINIMUM DEPTH OF SIX INCHES TO REMOVE ANY ORGANIC MATERIAL.
8. ANY ADDITIONAL FILL PLACED AT SITE SHOULD BE STRUCTURAL SELECT FILL AND COMPACTED IN SIX TO EIGHT INCH LIFTS TO 95% OF MAXIMUM DRY DENSITY.
9. ALL REINFORCEMENT SHALL BE GRADE 60 KSI. REINFORCEMENT SHALL HAVE MINIMUM COVERAGE OF 3" IN CONCRETE CAST DIRECTLY AGAINST EARTH, AND 1-1/2" OF COVERAGE EVERYWHERE ELSE.
10. SAWCUTS SHALL BE PERFORMED WITHIN 24 HOURS OF CONCRETE PLACEMENT AND SHALL EXTEND TO A DEPTH OF 25% OF THE SLAB THICKNESS.
11. AN INDEPENDENT TESTING LABORATORY SHALL PERFORM THE FOLLOWING TESTS ON CAST IN PLACE CONCRETE:
    - A) ASTM C143 "STANDARD TEST FOR SLUMP OF PORTLAND CEMENT CONCRETE." ALL CONCRETE SHALL CONTAIN A MAXIMUM SLUMP OF 4" UNLESS THE CONTRACTOR USES A SUPERPLASTERCIZING ADMIXTURE.
    - B) ASTM C39 "STANDARD TEST FOR COMPRESSIVE STRENGTH OF CYLINDRICAL CONCRETE SPECIMENS." A SEPARATE TEST SHALL BE CONDUCTED FOR EACH CLASS, FOR EVERY 50 CUBIC YARDS OR A FRACTION THEREOF, PLACED PER DAY. REQUIRED CYLINDER(S) QUANTITIES AND TEST AGE AS FOLLOWS:
      - (1) AT 7 DAYS
      - (2) AT 28 DAYS

    ONE ADDITIONAL RESERVE CYLINDER TO BE TESTED UNDER THE DIRECTION OF THE ENGINEER, IF REQUIRED. IF 28 DAY STRENGTH IS ACHIEVED, THE ADDITIONAL CYLINDER(S) MAY BE DISCARDED.

STATE OF TEXAS
HEATH E. REYNOLDS
113232
LICENSED
PROFESSIONAL ENGINEER

HEATH E. REYNOLDS, P.E. •113232

01 JCSO HANGAR BUILDING GRADING AND PAVING PLAN

SCALE: 1" = 30'-0"

The above drawings and specifications, and ideas, designs and arrangements represented thereby are and shall remain the property of the architect/engineers and no part thereof shall be copied, disclosed to others or used in connection with any other work or project other than the specific project for which they have been prepared and developed, without the written consent of the architect/engineers. Visual contact with these drawings and/or specifications shall constitute conclusive evidence of acceptance of these restrictions.

LJA Engineering, Inc.
Midstream Infrastructure
905 Orleans Street
Beaumont, Texas 77701
LJA Project No. B079-1013
Phone 409.813.1862
Fax 409.813.1916
FRN - F-1386

ISO PAGE
PAGE XX

NO	LOC	DESCRIPTION OF REVISION	BY DATE	APPR DATE
4				
3				
2		REISSUED FOR CONSTRUCTION	JLG 8/23/17	HER 8/23/17
1		ISSUED FOR OWNER'S REVIEW	JLG 8/17/17	
0		ISSUED FOR CONSTRUCTION	JLG 2/17/17	

WORK ORDER NO.

Jefferson County Sheriff's Department

CONSTRUCTION DOCUMENTS
PROPOSED GRADING & PAVING PLAN
Southeast Texas Regional Airport
Jefferson County, Texas

DRAWN: JLG	SCALE: 1" = 30'-0"	DATE: Aug 29, 2016	
APPROVED: HER	CHECKED: DCH	NO. C1.02	REV 2

C1.02

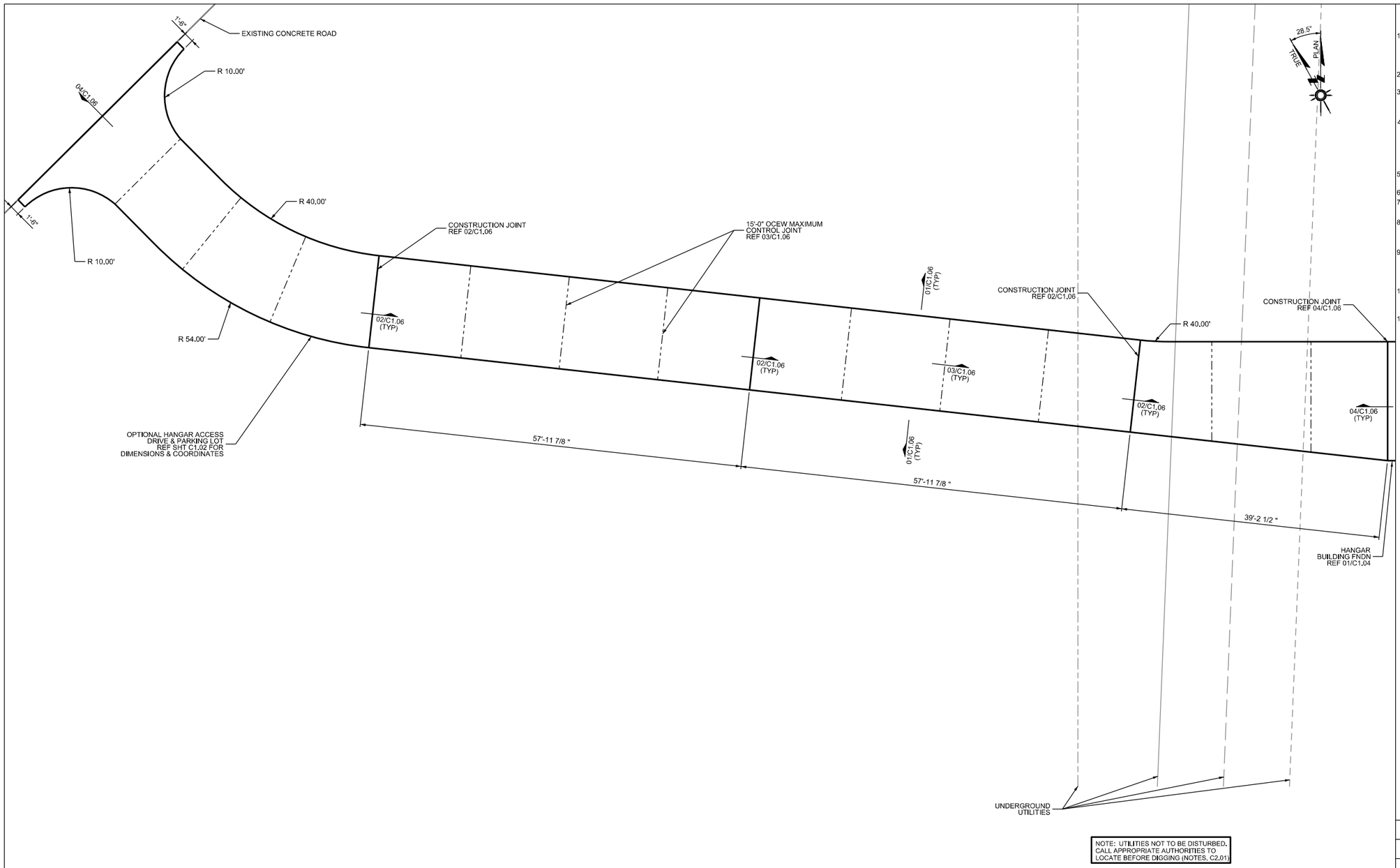

NOTE: UTILITIES NOT TO BE DISTURBED. CALL APPROPRIATE AUTHORITIES TO LOCATE BEFORE DIGGING (NOTES, C2.01)

GENERAL NOTES

1. INSTALLATION SHALL COMPLY WITH ALL LOCAL, STATE AND FEDERAL CODES, ORDINANCES, LAWS, AND REGULATIONS THAT APPLY. INTERNATIONAL BUILDING CODE (IBC) GOVERNS IF NONE OF THE ABOVE ARE IN PLACE.
2. INSTALLATION, CURING, FINISHING, ETC. SHALL BE IN ACCORDANCE WITH ACI 302.1R-104
3. CONCRETE SHALL BE 3,000 P.S.I. 5 SACK MIX UNLESS OTHERWISE NOTED. DO NOT INCLUDE ANY ADMIXTURE WITHOUT OWNER'S PRIOR APPROVAL.
4. AFTER EXCAVATION, THE EXPOSED SUBGRADE SHALL BE PROOF ROLLED IN ACCORDANCE WITH TXDOT SPECIFICATION ITEM 216 TO LOCATE ANY SOFT OR LOOSE AREAS. AREAS FOUND TO DEFLECT UNDER LOAD SHOULD BE UNDERCUT AND REPLACED WITH PROPERLY COMPACTED STRUCTURAL FILL.
5. CONCRETE TO BE PLACED AS A SINGLE POUR UNLESS APPROVED BY LJA ENGINEERING, INC.
6. ALL REBAR IS TO BE SUPPORTED ON STANDARD SUPPORT CHAIRS.
7. SITE SHOULD BE SCARIFIED TO MINIMUM DEPTH OF SIX INCHES TO REMOVE ANY ORGANIC MATERIAL.
8. ANY ADDITIONAL FILL PLACED AT SITE SHOULD BE STRUCTURAL SELECT FILL AND COMPACTED IN SIX TO EIGHT INCH LIFTS TO 95% OF MAXIMUM DRY DENSITY.
9. ALL REINFORCEMENT SHALL BE GRADE 60 KSI. REINFORCEMENT SHALL HAVE MINIMUM COVERAGE OF 3" IN CONCRETE CAST DIRECTLY AGAINST EARTH, AND 1-1/2" OF COVERAGE EVERYWHERE ELSE.
10. SAWCUTS SHALL BE PERFORMED WITHIN 24 HOURS OF CONCRETE PLACEMENT AND SHALL EXTEND TO A DEPTH OF 25% OF THE SLAB THICKNESS.
11. AN INDEPENDENT TESTING LABORATORY SHALL PERFORM THE FOLLOWING TESTS ON CAST IN PLACE CONCRETE:
    A) ASTM C143 "STANDARD TEST FOR SLUMP OF PORTLAND CEMENT CONCRETE." ALL CONCRETE SHALL CONTAIN A MAXIMUM SLUMP OF 4" UNLESS THE CONTRACTOR USES A SUPERPLASTERCIZING ADMIXTURE.
    B) ASTM C39 "STANDARD TEST FOR COMPRESSIVE STRENGTH OF CYLINDRICAL CONCRETE SPECIMENS." A SEPARATE TEST SHALL BE CONDUCTED FOR EACH CLASS, FOR EVERY 50 CUBIC YARDS OR A FRACTION THEREOF, PLACED PER DAY. REQUIRED CYLINDER(S) QUANTITIES AND TEST AGE AS FOLLOWS:
        (1) AT 7 DAYS
        (2) AT 28 DAYS

    ONE ADDITIONAL RESERVE CYLINDER TO BE TESTED UNDER THE DIRECTION OF THE ENGINEER, IF REQUIRED. IF 28 DAY STRENGTH IS ACHIEVED, THE ADDITIONAL CYLINDER(S) MAY BE DISCARDED.

NO	LOC	DESCRIPTION OF REVISION	BY DATE	APPR DATE
4				
3				
2		REISSUED FOR CONSTRUCTION	JLG 8/23/17	HER 8/23/17
1		ISSUED FOR OWNER'S REVIEW	JLG 8/17/17	
0		ISSUED FOR CONSTRUCTION	JLG 2/17/17	

WORK ORDER NO.

Jefferson County Sheriff's Department

CONSTRUCTION DOCUMENTS
OPTIONAL HANGAR ACCESS DRIVE JOINT PLAN
Southeast Texas Regional Airport
Jefferson County, Texas

DRAWN: JLG	SCALE: 1/16" = 1'-0"	DATE: Aug 29, 2016	
APPROVED: HER	CHECKED: DCH	NO. C1.03	REV 2

01 HANGAR ACCESS DRIVE/PARKING JOINT PLAN/BID AS OPTION
SCALE: 1/16" = 1'-0"

STATE OF TEXAS
HEATH E. REYNOLDS
113232
LICENSED
PROFESSIONAL ENGINEER

HEATH E. REYNOLDS, P.E. •113232

The above drawings and specifications, and ideas, designs and arrangements represented thereby are and shall remain the property of the architect/engineers and no part thereof shall be copied, disclosed to others or used in connection with any other work or project other than the specific project for which they have been prepared and developed, without the written consent of the architect/engineers. Visual contact with these drawings and/or specifications shall constitute conclusive evidence of acceptance of these restrictions.

LJA Engineering, Inc.
Midstream Infrastructure
905 Orleans Street
Beaumont, Texas 77701
LJA Project No. B079-1013
Phone 409.813.1862
Fax 409.813.1916
FRN - F-1386

ISO PAGE
PAGE XX

C1.03

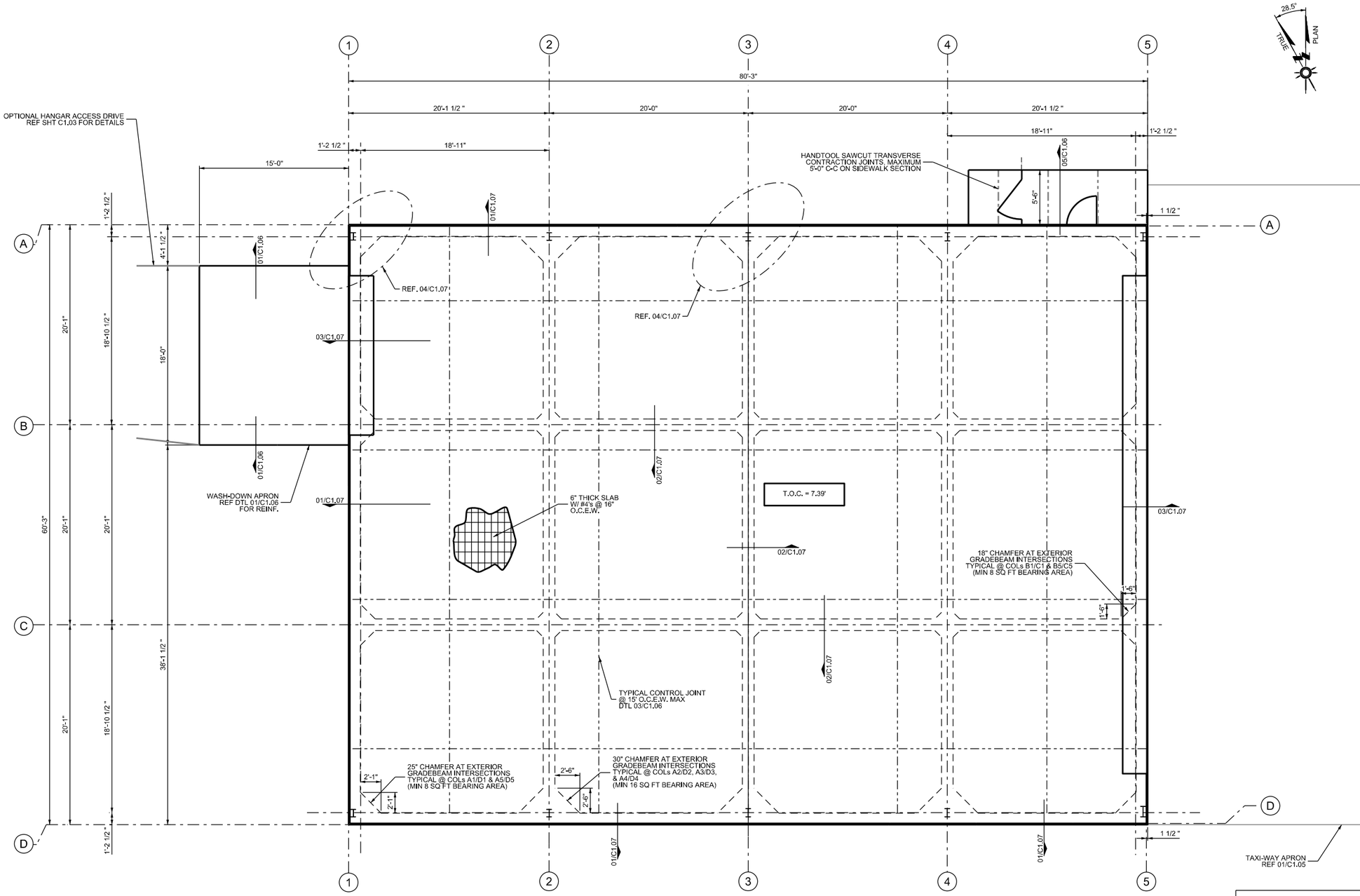

NOTE: METAL BUILDING FOUNDATION DESIGN SUBJECT TO CHANGE UPON RECEIVING METAL BUILDING DESIGN

01 HANGAR FOUNDATION PLAN

SCALE: 3/32" = 1'-0"

GENERAL NOTES

1. INSTALLATION SHALL COMPLY WITH ALL LOCAL, STATE AND FEDERAL CODES, ORDINANCES, LAWS, AND REGULATIONS THAT APPLY. INTERNATIONAL BUILDING CODE (IBC) GOVERNS IF NONE OF THE ABOVE ARE IN PLACE.
2. INSTALLATION, CURING, FINISHING, ETC. SHALL BE IN ACCORDANCE WITH ACI 302,1R-104
3. CONCRETE SHALL BE 3,000 P.S.I. 5 SACK MIX UNLESS OTHERWISE NOTED. DO NOT INCLUDE ANY ADMIXTURE WITHOUT OWNER'S PRIOR APPROVAL.
4. AFTER EXCAVATION, THE EXPOSED SUBGRADE SHALL BE PROOF ROLLED IN ACCORDANCE WITH TXDOT SPECIFICATION ITEM 216 TO LOCATE ANY SOFT OR LOOSE AREAS. AREAS FOUND TO DEFLECT UNDER LOAD SHOULD BE UNDERCUT AND REPLACED WITH PROPERLY COMPACTED STRUCTURAL FILL.
5. CONCRETE TO BE PLACED AS A SINGLE POUR UNLESS APPROVED BY LJA ENGINEERING, INC.
6. ALL REBAR IS TO BE SUPPORTED ON STANDARD SUPPORT CHAIRS.
7. SITE SHOULD BE SCARIFIED TO MINIMUM DEPTH OF SIX INCHES TO REMOVE ANY ORGANIC MATERIAL.
8. ANY ADDITIONAL FILL PLACED AT SITE SHOULD BE STRUCTURAL SELECT FILL AND COMPACTED IN SIX TO EIGHT INCH LIFTS TO 95% OF MAXIMUM DRY DENSITY.
9. ALL REINFORCEMENT SHALL BE GRADE 60 KSI. REINFORCEMENT SHALL HAVE MINIMUM COVERAGE OF 3" IN CONCRETE CAST DIRECTLY AGAINST EARTH, AND 1-1/2" OF COVERAGE EVERYWHERE ELSE.
10. SAWCUTS SHALL BE PERFORMED WITHIN 24 HOURS OF CONCRETE PLACEMENT AND SHALL EXTEND TO A DEPTH OF 25% OF THE SLAB THICKNESS.
11. AN INDEPENDENT TESTING LABORATORY SHALL PERFORM THE FOLLOWING TESTS ON CAST IN PLACE CONCRETE:
    A) ASTM C143 "STANDARD TEST FOR SLUMP OF PORTLAND CEMENT CONCRETE." ALL CONCRETE SHALL CONTAIN A MAXIMUM SLUMP OF 4" UNLESS THE CONTRACTOR USES A SUPERPLASTERCIZING ADMIXTURE.
    B) ASTM C39 "STANDARD TEST FOR COMPRESSIVE STRENGTH OF CYLINDRICAL CONCRETE SPECIMENS." A SEPARATE TEST SHALL BE CONDUCTED FOR EACH CLASS, FOR EVERY 50 CUBIC YARDS OR A FRACTION THEREOF, PLACED PER DAY. REQUIRED CYLINDER(S) QUANTITIES AND TEST AGE AS FOLLOWS:
        (1) AT 7 DAYS
        (2) AT 28 DAYS

    ONE ADDITIONAL RESERVE CYLINDER TO BE TESTED UNDER THE DIRECTION OF THE ENGINEER, IF REQUIRED, IF 28 DAY STRENGTH IS ACHIEVED, THE ADDITIONAL CYLINDER(S) MAY BE DISCARDED.

ATTENTION:

ONCE A BUILDING HAS BEEN PROCURED, METAL BUILDING COLUMN REACTIONS ALONG WITH ISSUED FOR CONSTRUCTION DRAWINGS SHALL BE PROVIDED TO LJA ENGINEERING FOR FINAL FOUNDATION DESIGN.

NO	LOC	DESCRIPTION OF REVISION	BY DATE	APPR DATE
4				
3				
2		REISSUED FOR BIDDING PURPOSES	JLG 8/23/17	HER 8/23/17
1		ISSUED FOR OWNER'S REVIEW	JLG 8/17/17	
0		ISSUED FOR BIDDING PURPOSES	JLG 2/17/17	

WORK ORDER NO.

FOR REVIEW ONLY
HEATH E. REYNOLDS P.E. 113232
NOT TO BE USED FOR
CONSTRUCTION PURPOSES

LJA Engineering, Inc.
Midstream Infrastructure
905 Orleans Street
Beaumont, Texas 77701
LJA Project No. B079-1013
Phone 409.813.1862
Fax 409.813.1916
FRN - F-1386

ISO PAGE
PAGE XX

Jefferson County Sheriff's Department

CONSTRUCTION DOCUMENTS
HANGAR FOUNDATION PLAN
Southeast Texas Regional Airport
Jefferson County, Texas

DRAWN: JLG | SCALE: 3/32" = 1'-0" | DATE: Aug 29, 2016
APPROVED: HER | CHECKED: DCH | NO. C1.04 | REV 2

The above drawings and specifications, and ideas, designs and arrangements represented thereby are and shall remain the property of the architect/engineers and no part thereof shall be copied, disclosed to others or used in connection with any other work or project other than the specific project for which they have been prepared and developed, without the written consent of the architect/engineers. Visual contact with these drawings and/or specifications shall constitute conclusive evidence of acceptance of these restrictions.

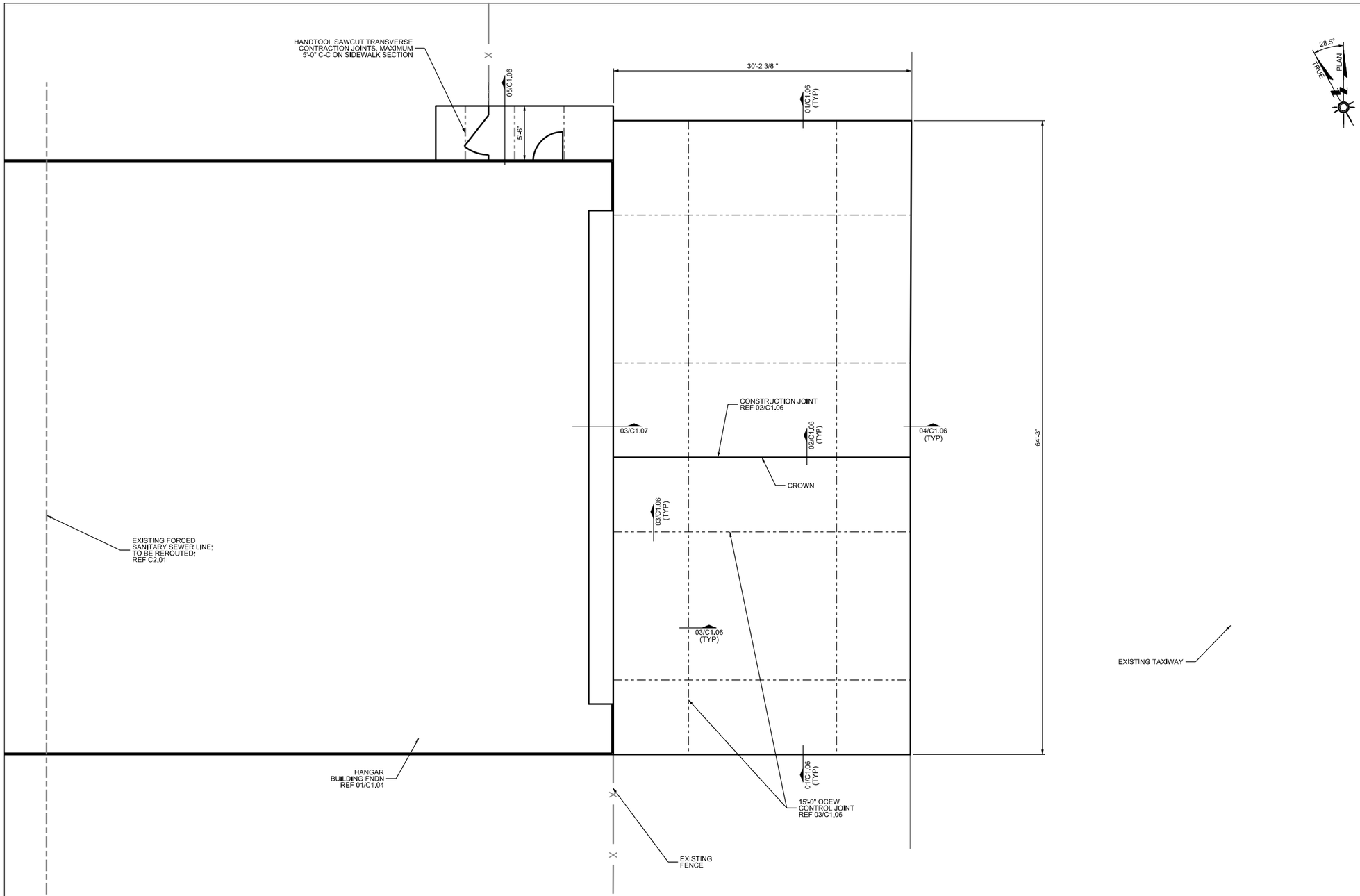

01 HANGAR TAXI-WAY APRON JOINT PLAN

SCALE: 3/32" = 1'-0"

GENERAL NOTES

1. INSTALLATION SHALL COMPLY WITH ALL LOCAL, STATE AND FEDERAL CODES, ORDINANCES, LAWS, AND REGULATIONS THAT APPLY. INTERNATIONAL BUILDING CODE (IBC) GOVERNS IF NONE OF THE ABOVE ARE IN PLACE.
2. INSTALLATION, CURING, FINISHING, ETC. SHALL BE IN ACCORDANCE WITH ACI 302.1R-104
3. CONCRETE SHALL BE 3,000 P.S.I. 5 SACK MIX UNLESS OTHERWISE NOTED. DO NOT INCLUDE ANY ADMIXTURE WITHOUT OWNER'S PRIOR APPROVAL.
4. AFTER EXCAVATION, THE EXPOSED SUBGRADE SHALL BE PROOF ROLLED IN ACCORDANCE WITH TXDOT SPECIFICATION ITEM 216 TO LOCATE ANY SOFT OR LOOSE AREAS. AREAS FOUND TO DEFLECT UNDER LOAD SHOULD BE UNDERCUT AND REPLACED WITH PROPERLY COMPACTED STRUCTURAL FILL.
5. CONCRETE TO BE PLACED AS A SINGLE POUR UNLESS APPROVED BY LJA ENGINEERING, INC.
6. ALL REBAR IS TO BE SUPPORTED ON STANDARD SUPPORT CHAIRS.
7. SITE SHOULD BE SCARIFIED TO MINIMUM DEPTH OF SIX INCHES TO REMOVE ANY ORGANIC MATERIAL.
8. ANY ADDITIONAL FILL PLACED AT SITE SHOULD BE STRUCTURAL SELECT FILL AND COMPACTED IN SIX TO EIGHT INCH LIFTS TO 95% OF MAXIMUM DRY DENSITY.
9. ALL REINFORCEMENT SHALL BE GRADE 60 KSI. REINFORCEMENT SHALL HAVE MINIMUM COVERAGE OF 3" IN CONCRETE CAST DIRECTLY AGAINST EARTH, AND 1-1/2" OF COVERAGE EVERYWHERE ELSE.
10. SAWCUTS SHALL BE PERFORMED WITHIN 24 HOURS OF CONCRETE PLACEMENT AND SHALL EXTEND TO A DEPTH OF 25% OF THE SLAB THICKNESS.
11. AN INDEPENDENT TESTING LABORATORY SHALL PERFORM THE FOLLOWING TESTS ON CAST IN PLACE CONCRETE:
    A) ASTM C143 "STANDARD TEST FOR SLUMP OF PORTLAND CEMENT CONCRETE." ALL CONCRETE SHALL CONTAIN A MAXIMUM SLUMP OF 4" UNLESS THE CONTRACTOR USES A SUPERPLASTERCIZING ADMIXTURE.
    B) ASTM C39 "STANDARD TEST FOR COMPRESSIVE STRENGTH OF CYLINDRICAL CONCRETE SPECIMENS." A SEPARATE TEST SHALL BE CONDUCTED FOR EACH CLASS, FOR EVERY 50 CUBIC YARDS OR A FRACTION THEREOF, PLACED PER DAY. REQUIRED CYLINDER(S) QUANTITIES AND TEST AGE AS FOLLOWS:
        (1) AT 7 DAYS
        (2) AT 28 DAYS

    ONE ADDITIONAL RESERVE CYLINDER TO BE TESTED UNDER THE DIRECTION OF THE ENGINEER. IF REQUIRED. IF 28 DAY STRENGTH IS ACHIEVED, THE ADDITIONAL CYLINDER(S) MAY BE DISCARDED.

STATE OF TEXAS
HEATH E. REYNOLDS
113232
LICENSED
PROFESSIONAL ENGINEER

HEATH E. REYNOLDS, P.E. #113232

NO	LOC	DESCRIPTION OF REVISION	BY DATE	APPR DATE
4				
3				
2		REISSUED FOR CONSTRUCTION	JLG 8/23/17	HER 8/23/17
1		ISSUED FOR OWNER'S REVIEW	JLG 8/17/17	
0		ISSUED FOR CONSTRUCTION	JLG 2/17/17	

WORK ORDER NO.

Jefferson County Sheriff's Department

CONSTRUCTION DOCUMENTS
HANGAR TAXI-WAY APRON JOINT PLAN
Southeast Texas Regional Airport
Jefferson County, Texas

DRAWN: JLG | SCALE: 3/32" = 1'-0" | DATE: Aug 29, 2016
APPROVED: HER | CHECKED: DCH | NO. C1.05 | REV 2

LJA Engineering, Inc.
Midstream Infrastructure
905 Orleans Street
Beaumont, Texas 77701
LJA Project No. B079-1013
Phone 409.813.1862
Fax 409.813.1916
FRN - F-1386

ISO PAGE
PAGE XX

The above drawings and specifications, and ideas, designs and arrangements represented thereby are and shall remain the property of the architect/engineers and no part thereof shall be copied, disclosed to others or used in connection with any other work or project other than the specific project for which they have been prepared and developed, without the written consent of the architect/engineers. Visual contact with these drawings and/or specifications shall constitute conclusive evidence of acceptance of these restrictions.

C1.05

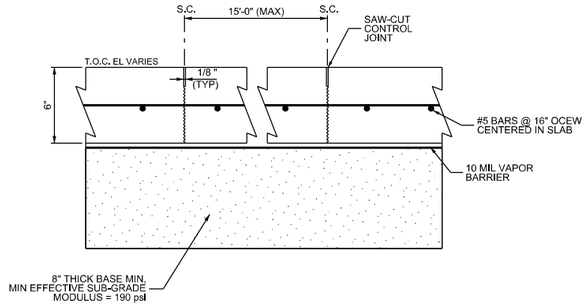

01 TYPICAL PAVEMENT SECTION

SCALE: 1" = 1'-0"

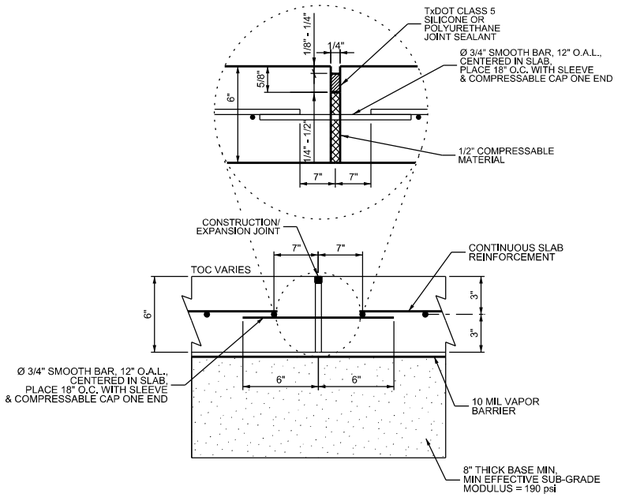

02 CONSTRUCTION JOINT DETAIL

SCALE: 1" = 1'-0"

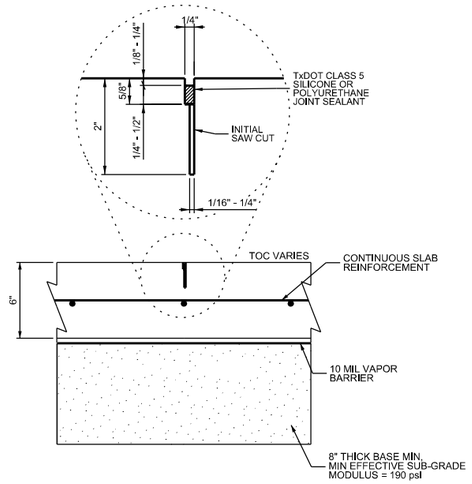

03 CONTROL JOINT DETAIL

SCALE: 1" = 1'-0"

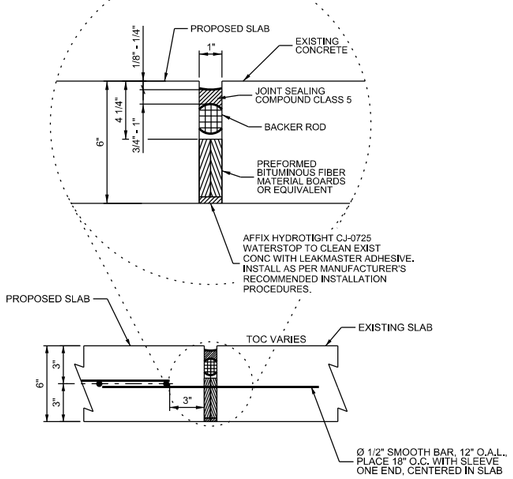

04 TIE-IN TO EXISTING CONCRETE

SCALE: 1" = 1'-0"

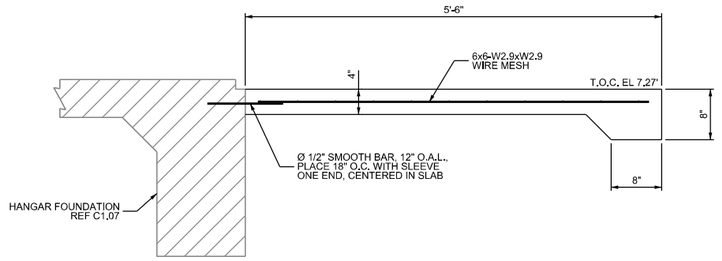

05 TYP SIDEWALK SECTION

SCALE: 1/2" = 1'-0"

GENERAL NOTES

1. INSTALLATION SHALL COMPLY WITH ALL LOCAL, STATE AND FEDERAL CODES, ORDINANCES, LAWS, AND REGULATIONS THAT APPLY. INTERNATIONAL BUILDING CODE (IBC) GOVERNS IF NONE OF THE ABOVE ARE IN PLACE.
2. INSTALLATION, CURING, FINISHING, ETC. SHALL BE IN ACCORDANCE WITH ACI 302.1R-104
3. CONCRETE SHALL BE 3,000 P.S.I. 5 SACK MIX UNLESS OTHERWISE NOTED. DO NOT INCLUDE ANY ADMIXTURE WITHOUT OWNER'S PRIOR APPROVAL.
4. AFTER EXCAVATION, THE EXPOSED SUBGRADE SHALL BE PROOF ROLLED IN ACCORDANCE WITH TXDOT SPECIFICATION ITEM 216 TO LOCATE ANY SOFT OR LOOSE AREAS. AREAS FOUND TO DEFLECT UNDER LOAD SHOULD BE UNDERCUT AND REPLACED WITH PROPERLY COMPACTED STRUCTURAL FILL.
5. CONCRETE TO BE PLACED AS A SINGLE POUR UNLESS APPROVED BY LJA ENGINEERING, INC.
6. ALL REBAR IS TO BE SUPPORTED ON STANDARD SUPPORT CHAIRS.
7. SITE SHOULD BE SCARIFIED TO MINIMUM DEPTH OF SIX INCHES TO REMOVE ANY ORGANIC MATERIAL.
8. ANY ADDITIONAL FILL PLACED AT SITE SHOULD BE STRUCTURAL SELECT FILL AND COMPACTED IN SIX TO EIGHT INCH LIFTS TO 95% OF MAXIMUM DRY DENSITY.
9. ALL REINFORCEMENT SHALL BE GRADE 60 KSI. REINFORCEMENT SHALL HAVE MINIMUM COVERAGE OF 3" IN CONCRETE CAST DIRECTLY AGAINST EARTH, AND 1-1/2" OF COVERAGE EVERYWHERE ELSE.
10. SAWCUTS SHALL BE PERFORMED WITHIN 24 HOURS OF CONCRETE PLACEMENT AND SHALL EXTEND TO A DEPTH OF 25% OF THE SLAB THICKNESS.
11. AN INDEPENDENT TESTING LABORATORY SHALL PERFORM THE FOLLOWING TESTS ON CAST IN PLACE CONCRETE:
    A) ASTM C143 "STANDARD TEST FOR SLUMP OF PORTLAND CEMENT CONCRETE." ALL CONCRETE SHALL CONTAIN A MAXIMUM SLUMP OF 4" UNLESS THE CONTRACTOR USES A SUPERPLASTERCIZING ADMIXTURE.
    B) ASTM C39 "STANDARD TEST FOR COMPRESSIVE STRENGTH OF CYLINDRICAL CONCRETE SPECIMENS." A SEPARATE TEST SHALL BE CONDUCTED FOR EACH CLASS, FOR EVERY 50 CUBIC YARDS OR A FRACTION THEREOF, PLACED PER DAY. REQUIRED CYLINDER(S) QUANTITIES AND TEST AGE AS FOLLOWS:
       (1) AT 7 DAYS
       (2) AT 28 DAYS

    ONE ADDITIONAL RESERVE CYLINDER TO BE TESTED UNDER THE DIRECTION OF THE ENGINEER, IF REQUIRED. IF 28 DAY STRENGTH IS ACHIEVED, THE ADDITIONAL CYLINDER(S) MAY BE DISCARDED.

NO	LOC	DESCRIPTION OF REVISION	BY DATE	APPR DATE
4				
3				
2		REISSUED FOR CONSTRUCTION	JLG 8/23/17	HER 8/23/17
1		ISSUED FOR OWNER'S REVIEW	JLG 8/17/17	
0		ISSUED FOR CONSTRUCTION	JLG 2/17/17	

WORK ORDER NO.

Jefferson County Sheriff's Department

CONSTRUCTION DOCUMENTS
HANGAR ACCESS DRIVE/TAXI-WAY APRON DTLS
Southeast Texas Regional Airport
Jefferson County, Texas

DRAWN:	SCALE:	DATE:
JLG	1/16" = 1'-0"	Aug 29, 2016
APPROVED: HER	CHECKED: DCH	NO. C1.06 REV 2

STATE OF TEXAS
HEATH E. REYNOLDS
113232
LICENSED
PROFESSIONAL ENGINEER

HEATH E. REYNOLDS, P.E. •113232

LJA Engineering, Inc.
Midstream Infrastructure
905 Orleans Street
Beaumont, Texas 77701
LJA Project No. B079-1013
Phone 409.813.1862
Fax 409.813.1916
FRN - F-1386

ISO PAGE
PAGE XX

The above drawings and specifications, and ideas, designs and arrangements represented thereby are and shall remain the property of the architect/engineers and no part thereof shall be copied, disclosed to others or used in connection with any other work or project other than the specific project for which they have been prepared and developed, without the written consent of the architect/engineers. Visual contact with these drawings and/or specifications shall constitute conclusive evidence of acceptance of these restrictions.

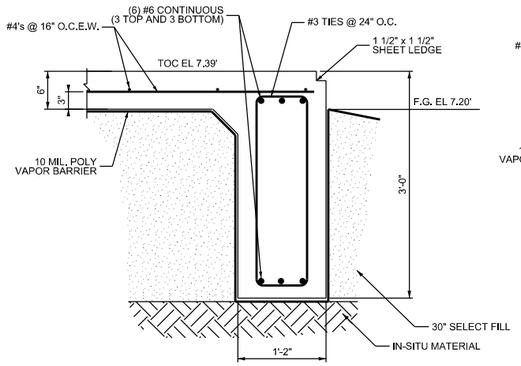

01 TYP EXT. SECTION @ GRADE
SCALE: 1/2" = 1'-0"

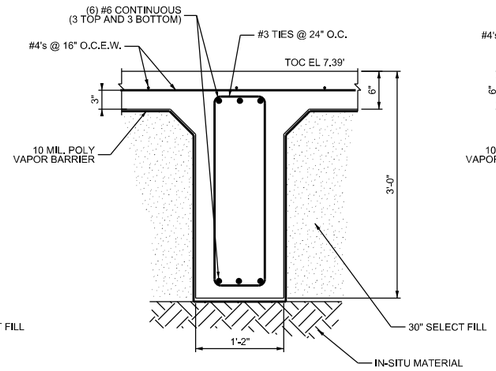

02 TYP INT. SECTION
SCALE: 1/2" = 1'-0"

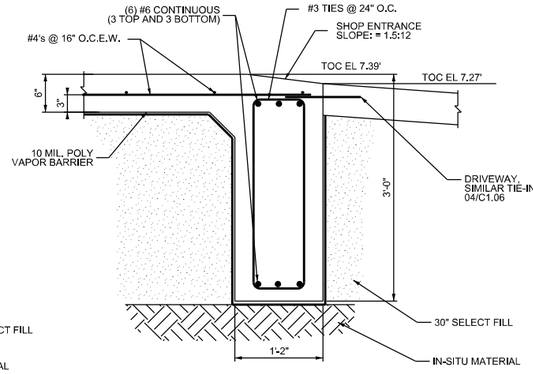

03 TYP EXT. SECTION @ DOOR
SCALE: 1/2" = 1'-0"

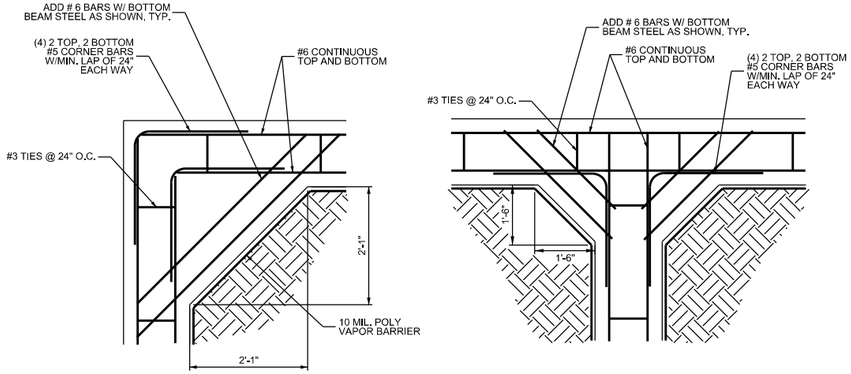

04 GRADEBEAM INTERSECTION
SCALE: NTS

NOTE: METAL BUILDING FOUNDATION DESIGN SUBJECT TO CHANGE UPON RECEIVING METAL BUILDING DESIGN

GENERAL NOTES

1. INSTALLATION SHALL COMPLY WITH ALL LOCAL, STATE AND FEDERAL CODES, ORDINANCES, LAWS, AND REGULATIONS THAT APPLY. INTERNATIONAL BUILDING CODE (IBC) GOVERNS IF NONE OF THE ABOVE ARE IN PLACE.
2. INSTALLATION, CURING, FINISHING, ETC. SHALL BE IN ACCORDANCE WITH ACI 302.1R-104
3. CONCRETE SHALL BE 3,000 P.S.I. 5 SACK MIX UNLESS OTHERWISE NOTED. DO NOT INCLUDE ANY ADMIXTURE WITHOUT OWNER'S PRIOR APPROVAL.
4. AFTER EXCAVATION, THE EXPOSED SUBGRADE SHALL BE PROOF ROLLED IN ACCORDANCE WITH TXDOT SPECIFICATION ITEM 216 TO LOCATE ANY SOFT OR LOOSE AREAS. AREAS FOUND TO DEFLECT UNDER LOAD SHOULD BE UNDERCUT AND REPLACED WITH PROPERLY COMPACTED STRUCTURAL FILL.
5. CONCRETE TO BE PLACED AS A SINGLE POUR UNLESS APPROVED BY LJA ENGINEERING, INC.
6. ALL REBAR IS TO BE SUPPORTED ON STANDARD SUPPORT CHAIRS.
7. SITE SHOULD BE SCARIFIED TO MINIMUM DEPTH OF SIX INCHES TO REMOVE ANY ORGANIC MATERIAL.
8. ANY ADDITIONAL FILL PLACED AT SITE SHOULD BE STRUCTURAL SELECT FILL AND COMPACTED IN SIX TO EIGHT INCH LIFTS TO 95% OF MAXIMUM DRY DENSITY.
9. ALL REINFORCEMENT SHALL BE GRADE 60 KSI. REINFORCEMENT SHALL HAVE MINIMUM COVERAGE OF 3" IN CONCRETE CAST DIRECTLY AGAINST EARTH, AND 1-1/2" OF COVERAGE EVERYWHERE ELSE.
10. SAWCUTS SHALL BE PERFORMED WITHIN 24 HOURS OF CONCRETE PLACEMENT AND SHALL EXTEND TO A DEPTH OF 25% OF THE SLAB THICKNESS.
11. AN INDEPENDENT TESTING LABORATORY SHALL PERFORM THE FOLLOWING TESTS ON CAST IN PLACE CONCRETE:
    A) ASTM C143 "STANDARD TEST FOR SLUMP OF PORTLAND CEMENT CONCRETE." ALL CONCRETE SHALL CONTAIN A MAXIMUM SLUMP OF 4" UNLESS THE CONTRACTOR USES A SUPERPLASTERCIZING ADMIXTURE.
    B) ASTM C39 "STANDARD TEST FOR COMPRESSIVE STRENGTH OF CYLINDRICAL CONCRETE SPECIMENS." A SEPARATE TEST SHALL BE CONDUCTED FOR EACH CLASS, FOR EVERY 50 CUBIC YARDS OR A FRACTION THEREOF, PLACED PER DAY. REQUIRED CYLINDER(S) QUANTITIES AND TEST AGE AS FOLLOWS:
        (1) AT 7 DAYS
        (2) AT 28 DAYS

    ONE ADDITIONAL RESERVE CYLINDER TO BE TESTED UNDER THE DIRECTION OF THE ENGINEER, IF REQUIRED. IF 28 DAY STRENGTH IS ACHIEVED, THE ADDITIONAL CYLINDER(S) MAY BE DISCARDED.

ATTENTION:

ONCE A BUILDING HAS BEEN PROCURED, METAL BUILDING COLUMN REACTIONS ALONG WITH ISSUED FOR CONSTRUCTION DRAWINGS SHALL BE PROVIDED TO LJA ENGINEERING FOR FINAL FOUNDATION DESIGN.

FOR REVIEW ONLY
HEATH E. REYNOLDS P.E. 113232
NOT TO BE USED FOR
CONSTRUCTION PURPOSES

NO	LOC	DESCRIPTION OF REVISION	BY DATE	APPR DATE
4				
3				
2		REISSUED FOR BIDDING PURPOSES	JLG 8/23/17	HER 8/23/17
1		ISSUED FOR OWNER'S REVIEW	JLG 8/17/17	
0		ISSUED FOR BIDDING PURPOSES	JLG 2/17/17	

WORK ORDER NO.

Jefferson County Sheriff's Department

CONSTRUCTION DOCUMENTS
HANGAR FOUNDATION DETAILS
Southeast Texas Regional Airport
Jefferson County, Texas

DRAWN: JLG	SCALE: 1/16" = 1'-0"	DATE: Aug 29, 2016	
APPROVED: HER	CHECKED: DCH	NO. C1.07	REV 2

The above drawings and specifications, and ideas, designs and arrangements represented thereby are and shall remain the property of the architect/engineers and no part thereof shall be copied, disclosed to others or used in connection with any other work or project other than the specific project for which they have been prepared and developed, without the written consent of the architect/engineers. Visual contact with these drawings and/or specifications shall constitute conclusive evidence of acceptance of these restrictions.

LJA Engineering, Inc.
Midstream Infrastructure
905 Orleans Street
Beaumont, Texas 77701
LJA Project No. B079-1013
Phone 409.813.1862
Fax 409.813.1916
FRN - F-1386

ISO PAGE
PAGE XX

C1.07

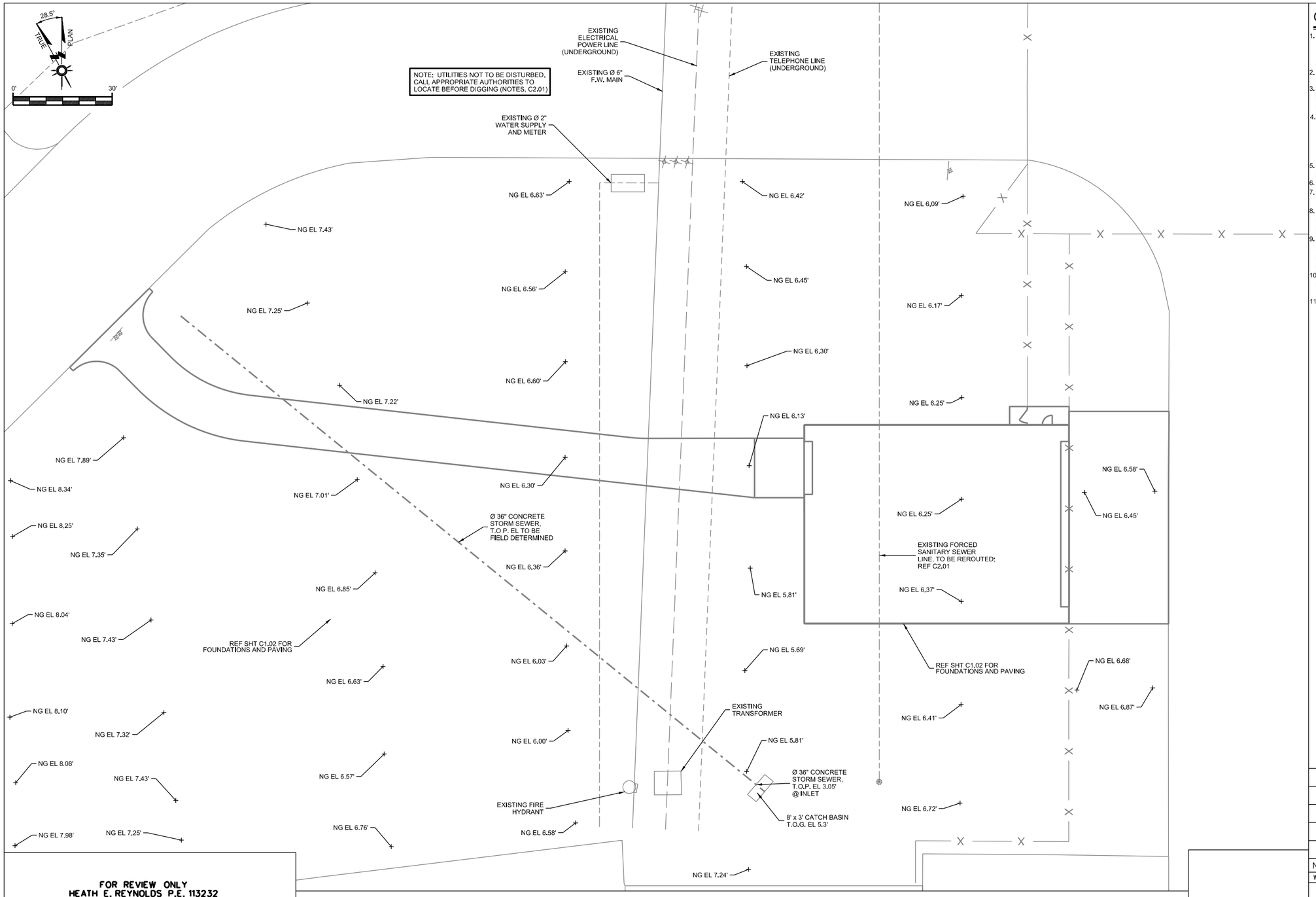

GENERAL NOTES

1. INSTALLATION SHALL COMPLY WITH ALL LOCAL, STATE AND FEDERAL CODES, ORDINANCES, LAWS, AND REGULATIONS THAT APPLY. INTERNATIONAL BUILDING CODE (IBC) GOVERNS IF NONE OF THE ABOVE ARE IN PLACE.
2. INSTALLATION, CURING, FINISHING, ETC. SHALL BE IN ACCORDANCE WITH ACI 302.1R-104
3. CONCRETE SHALL BE 3,000 P.S.I. 5 SACK MIX UNLESS OTHERWISE NOTED. DO NOT INCLUDE ANY ADMIXTURE WITHOUT OWNER'S PRIOR APPROVAL.
4. AFTER EXCAVATION, THE EXPOSED SUBGRADE SHALL BE PROOF ROLLED IN ACCORDANCE WITH TXDOT SPECIFICATION ITEM 216 TO LOCATE ANY SOFT OR LOOSE AREAS. AREAS FOUND TO DEFLECT UNDER LOAD SHOULD BE UNDERCUT AND REPLACED WITH PROPERLY COMPACTED STRUCTURAL FILL.
5. CONCRETE TO BE PLACED AS A SINGLE POUR UNLESS APPROVED BY LJA ENGINEERING, INC.
6. ALL REBAR IS TO BE SUPPORTED ON STANDARD SUPPORT CHAIRS.
7. SITE SHOULD BE SCARIFIED TO MINIMUM DEPTH OF SIX INCHES TO REMOVE ANY ORGANIC MATERIAL.
8. ANY ADDITIONAL FILL PLACED AT SITE SHOULD BE STRUCTURAL SELECT FILL AND COMPACTED IN SIX TO EIGHT INCH LIFTS TO 95% OF MAXIMUM DRY DENSITY.
9. ALL REINFORCEMENT SHALL BE GRADE 60 KSI. REINFORCEMENT SHALL HAVE MINIMUM COVERAGE OF 3" IN CONCRETE CAST DIRECTLY AGAINST EARTH, AND 1-1/2" OF COVERAGE EVERYWHERE ELSE.
10. SAWCUTS SHALL BE PERFORMED WITHIN 24 HOURS OF CONCRETE PLACEMENT AND SHALL EXTEND TO A DEPTH OF 25% OF THE SLAB THICKNESS.
11. AN INDEPENDENT TESTING LABORATORY SHALL PERFORM THE FOLLOWING TESTS ON CAST IN PLACE CONCRETE:
    A) ASTM C143 "STANDARD TEST FOR SLUMP OF PORTLAND CEMENT CONCRETE." ALL CONCRETE SHALL CONTAIN A MAXIMUM SLUMP OF 4" UNLESS THE CONTRACTOR USES A SUPERPLASTERCIZING ADMIXTURE.
    B) ASTM C39 "STANDARD TEST FOR COMPRESSIVE STRENGTH OF CYLINDRICAL CONCRETE SPECIMENS." A SEPARATE TEST SHALL BE CONDUCTED FOR EACH CLASS, FOR EVERY 50 CUBIC YARDS OR A FRACTION THEREOF, PLACED PER DAY. REQUIRED CYLINDER(S) QUANTITIES AND TEST AGE AS FOLLOWS:
        (1) AT 7 DAYS
        (2) AT 28 DAYS

    ONE ADDITIONAL RESERVE CYLINDER TO BE TESTED UNDER THE DIRECTION OF THE ENGINEER, IF REQUIRED. IF 28 DAY STRENGTH IS ACHIEVED, THE ADDITIONAL CYLINDER(S) MAY BE DISCARDED.

FOR REVIEW ONLY
HEATH E. REYNOLDS P.E. 113232
NOT TO BE USED FOR CONSTRUCTION PURPOSES

01 JCSO HANGAR BUILDING EXISTING NATURAL GRADE PLAN
SCALE: 1" = 30'-0"

The above drawings and specifications, and ideas, designs and arrangements represented thereby are and shall remain the property of the architect/engineers and no part thereof shall be copied, disclosed to others or used in connection with any other work or project other than the specific project for which they have been prepared and developed, without the written consent of the architect/engineers. Visual contact with these drawings and/or specifications shall constitute conclusive evidence of acceptance of these restrictions.

LJA Engineering, Inc.
Midstream Infrastructure
905 Orleans Street
Beaumont, Texas 77701
LJA Project No. B079-1013
Phone 409.813.1862
Fax 409.813.1916
FRN - F-1386

ISO PAGE
PAGE XX

NO	LOC	DESCRIPTION OF REVISION	BY DATE	APPR DATE
4				
3				
2				
1		REISSUED FOR OWNER'S REVIEW	JLG 8/23/17	HER 8/23/17
0		ISSUED FOR OWNER'S REVIEW	JLG 8/17/17	

WORK ORDER NO.

Jefferson County Sheriff's Department

CONSTRUCTION DOCUMENTS
EXISTING NATURAL GRADE PLAN
Southeast Texas Regional Airport
Jefferson County, Texas

DRAWN: JLG
APPROVED: HER
SCALE: 1" = 30'-0"
CHECKED: DCH
DATE: April 10, 2017
NO. C1.08
REV 1

C1.08

28.5° TRUE PLAN

0' 40'

EXISTING UNDERGROUND ELECTRICAL POWER LINE

EXISTING UNDERGROUND TELEPHONE LINE

EXISTING 8" WATER MAIN (CITY OF NEDERLAND)

PROPOSED 2" WATER SUPPLY LINE (02/C2.01)

EXISTING 6" ISOLATION VALVE (VERIFY)

METER LOCATION

EXISTING 6" F.W. MAIN

EXISTING UNDERGROUND TELEPHONE LINE

PROPOSED 24" x 24" CATCH BASIN, REF C1.02

EXISTING 2" WATER SUPPLY TO HANGAR NO. 7

EXISTING 2" FORCED SANITARY SEWER

PROPOSED Ø 12" STORM DRAIN, REF C1.02

TIE-IN TO EXISTING

5'-0" MIN

PROPOSED 6" F.W. SUPPLY LINE (03/2.01) (UNMETERED)

22.5° TYP

45° TYP

REROUTE 2" SANITARY SEWER LINE AS SHOWN

EXISTING TAXIWAY

REROUTE 2" SANITARY SEWER LINE AS SHOWN

EXISTING 2" FORCED SANITARY SEWER (THIS SECTION TO BE ABANDONED)

REF 01/C1.04 FOR HANGAR FOUNDATION PLAN

EXISTING STORM WATER DRAIN

3/4" UP

4" SEWER STUB-OUT W/ CLEAN-OUTS (REF P2.01)

REF SHT C2.02 FOR CONNECTION @ BLDG

4" SEWER LINE TO GRINDER PUMP

PROPOSED 2" WATER SUPPLY LINE (02/C2.01)

REROUTE 2" SANITARY SEWER LINE AS SHOWN

UNDERGROUND ELECTRICAL POWER LINE

400A POWER SERVICE TO BLDG (REF C2.02)

TIE-IN TO EXISTING

EXISTING FIRE HYDRANT

EXISTING CATCH BASIN

EXISTING GRINDER PUMP

EXISTING 150 kVA TRANSFORMER

NEW 150 kVA TRANSFORMER PAD (REF C2.02)

01 JCSO HANGAR BUILDING UTILITIES PLAN

SCALE: 1" = 40'-0"

EXISTING 6" F.W. MAIN

FIRE HYDRANT

6"x6" T&V (TO BUILDING)

NOTE: COORDINATE WITH CITY OF NEDERLAND WATER DEPARTMENT AND FIRE DEPARTMENT FOR SPECIFICATIONS ON TAP. CONTRACTOR RESPONSIBLE FOR COST OF TAP. EXISTING 6" F.W. MAIN TO BE SHUT OFF AT EXISTING ISOLATION VALVE SHOWN IN PLAN.

03 CONNECTION TO EXISTING F.W. MAIN

SCALE:NTS

PROPOSED 2" SERVICE TAP, VALVE AND METER BY CITY FORCES AT CONTRACTOR'S EXPENSE

EXISTING 8" WATER

8"x2" T

6" FLOWMETER ASSEMBLY (LOCATED WITHIN ROW)

R.O.W.

2" ATMOSPHERIC BACK-FLOW PREVENTER, ANTI-SIPHON, ANTI-PRESSURE, TESTED BY CERTIFIED TESTER, PLUMBER TO INSTALL PER CODE (SEE CITY OF NEDERLAND BUILDING OFFICIAL)

2" LINE TO BLDG

02 CONNECTION TO EXISTING WATER MAIN

SCALE:NTS

GENERAL NOTES

1. UTILITIES PRESENTED ON THESE DRAWINGS ARE SHOWN BASED ON THE BEST AVAILABLE INFORMATION. CONTRACTOR SHALL VERIFY THE EXACT LOCATIONS IN THE FIELD PRIOR TO COMMENCING CONSTRUCTION.
2. CONTRACTOR SHALL NOTIFY "TEXAS ONE CALL" AT (800) 245-4545 AND "LONESTAR ONE CALL" AT (800) 669-8344 AT LEAST 48 HOURS BEFORE PROCEEDING WITH ANY EXCAVATION.

SYMBOLOGY LEGEND

- FIRE HYDRANT – USE CITY OF NEDERLAND SPECS
- VALVE -- USE CITY OF NEDERLAND SPECS
- METER – USE CITY OF NEDERLAND SPECS

STATE OF TEXAS · HEATH E. REYNOLDS · 113232 · LICENSED PROFESSIONAL ENGINEER

HEATH E. REYNOLDS, P.E. #113232

NO	LOC	DESCRIPTION OF REVISION	BY DATE	APPR DATE
4				
3				
2		REISSUED FOR CONSTRUCTION	JLG 8/23/17	HER 8/23/17
1		ISSUED FOR OWNER'S REVIEW	JLG 8/17/17	
0		ISSUED FOR CONSTRUCTION	JLG 2/17/17	

WORK ORDER NO.

Jefferson County Sheriff's Department

CONSTRUCTION DOCUMENTS
PROPOSED UTILITIES PLAN
Southeast Texas Regional Airport
Jefferson County, Texas

DRAWN: JLG | SCALE: 1" = 40'-0" | DATE: Aug 29, 2016

APPROVED: HER | CHECKED: DCH | NO. C2.01 | REV 2

The above drawings and specifications, and ideas, designs and arrangements represented thereby are and shall remain the property of the architect/engineers and no part thereof shall be copied, disclosed to others or used in connection with any other work or project other than the specific project for which they have been prepared and developed, without the written consent of the architect/engineers. Visual contact with these drawings and/or specifications shall constitute conclusive evidence of acceptance of these restrictions.

LJA Engineering, Inc.
Midstream Infrastructure
905 Orleans Street
Beaumont, Texas 77701
LJA Project No. B079-1013
Phone 409.813.1862
Fax 409.813.1916
FRN - F-1386

ISO PAGE | PAGE XX

C2.01

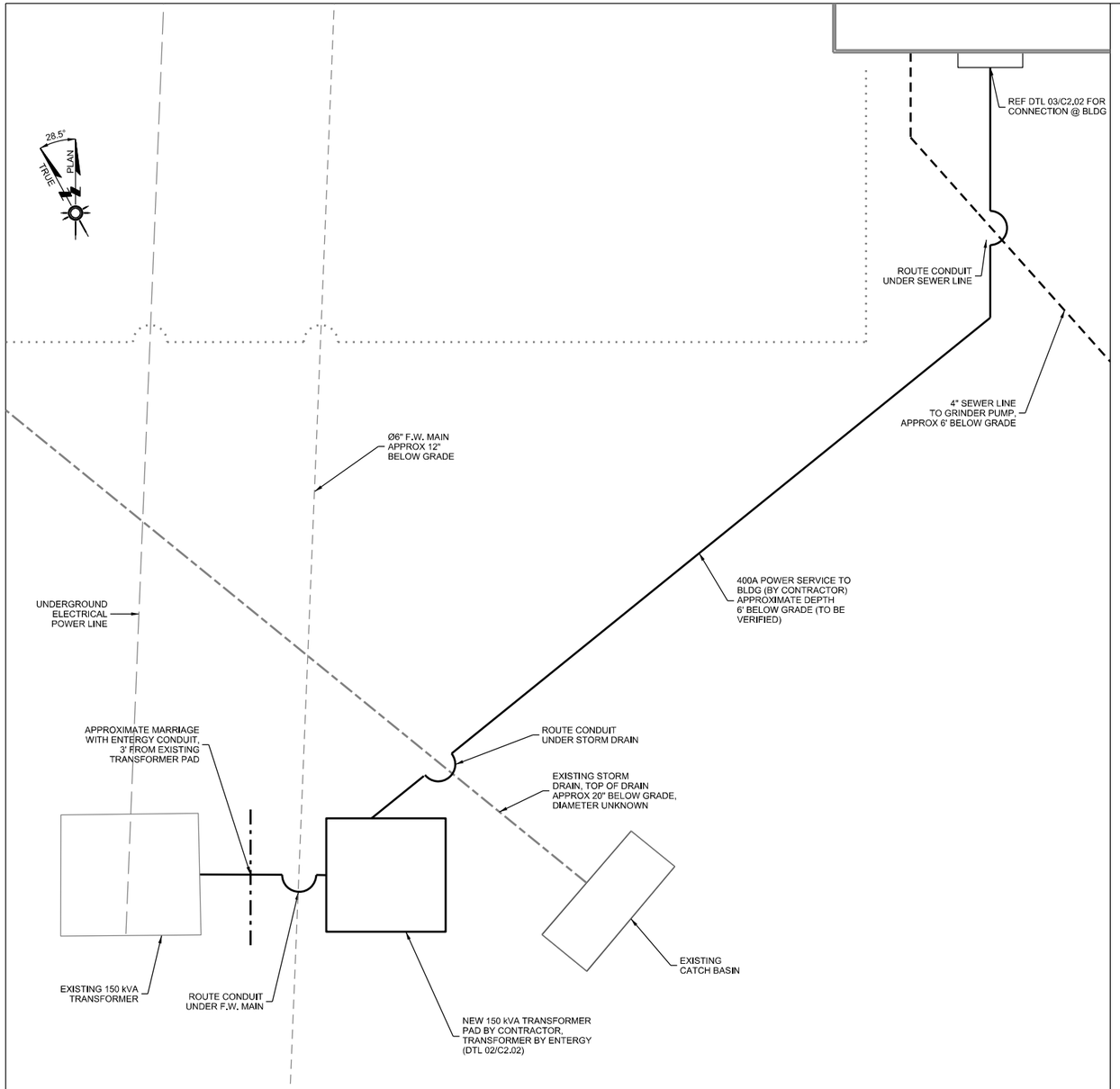

01 ELECTRICAL PLAN
SCALE: 1/8" = 1'-0"

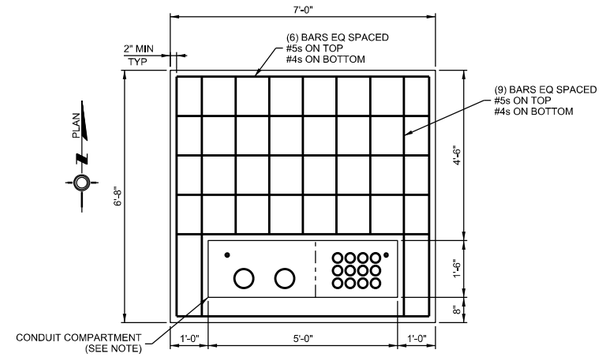

CONDUIT NOTES:
- COORDINATE WITH ENTERGY FOR CORRECT NUMBER AND SIZE OF CONDUITS
- COORDINATE WITH ENTERGY FOR GROUNDING REQUIREMENTS

02 TRANSFORMER PAD
SCALE: 1/4" = 1'-0"

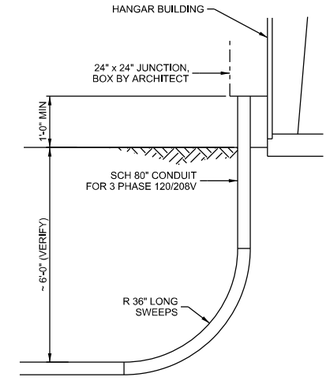

CONDUIT NOTES:
- COORDINATE WITH ENTERGY FOR CORRECT NUMBER AND SIZE OF CONDUITS

03 CONDUIT TERMINUS
SCALE: 1/4" = 1'-0"

GENERAL NOTES

1. INSTALLATION SHALL COMPLY WITH ALL LOCAL, STATE AND FEDERAL CODES, ORDINANCES, LAWS, AND REGULATIONS THAT APPLY. INTERNATIONAL BUILDING CODE (IBC) GOVERNS IF NONE OF THE ABOVE ARE IN PLACE.
2. INSTALLATION, CURING, FINISHING, ETC. SHALL BE IN ACCORDANCE WITH ACI 302.1R-104
3. CONCRETE SHALL BE 3,000 P.S.I. 5 SACK MIX UNLESS OTHERWISE NOTED. DO NOT INCLUDE ANY ADMIXTURE WITHOUT OWNER'S PRIOR APPROVAL.
4. AFTER EXCAVATION, THE EXPOSED SUBGRADE SHALL BE PROOF ROLLED IN ACCORDANCE WITH TXDOT SPECIFICATION ITEM 216 TO LOCATE ANY SOFT OR LOOSE AREAS. AREAS FOUND TO DEFLECT UNDER LOAD SHOULD BE UNDERCUT AND REPLACED WITH PROPERLY COMPACTED STRUCTURAL FILL.
5. CONCRETE TO BE PLACED AS A SINGLE POUR UNLESS APPROVED BY LJA ENGINEERING, INC.
6. ALL REBAR IS TO BE SUPPORTED ON STANDARD SUPPORT CHAIRS.
7. SITE SHOULD BE SCARIFIED TO MINIMUM DEPTH OF SIX INCHES TO REMOVE ANY ORGANIC MATERIAL.
8. ANY ADDITIONAL FILL PLACED AT SITE SHOULD BE STRUCTURAL SELECT FILL AND COMPACTED IN SIX TO EIGHT INCH LIFTS TO 95% OF MAXIMUM DRY DENSITY.
9. ALL REINFORCEMENT SHALL BE GRADE 60 KSI. REINFORCEMENT SHALL HAVE MINIMUM COVERAGE OF 3" IN CONCRETE CAST DIRECTLY AGAINST EARTH, AND 1-1/2" OF COVERAGE EVERYWHERE ELSE.
10. SAWCUTS SHALL BE PERFORMED WITHIN 24 HOURS OF CONCRETE PLACEMENT AND SHALL EXTEND TO A DEPTH OF 25% OF THE SLAB THICKNESS.
11. AN INDEPENDENT TESTING LABORATORY SHALL PERFORM THE FOLLOWING TESTS ON CAST IN PLACE CONCRETE:
    A) ASTM C143 "STANDARD TEST FOR SLUMP OF PORTLAND CEMENT CONCRETE," ALL CONCRETE SHALL CONTAIN A MAXIMUM SLUMP OF 4" UNLESS THE CONTRACTOR USES A SUPERPLASTERCIZING ADMIXTURE.
    B) ASTM C39 "STANDARD TEST FOR COMPRESSIVE STRENGTH OF CYLINDRICAL CONCRETE SPECIMENS," A SEPARATE TEST SHALL BE CONDUCTED FOR EACH CLASS, FOR EVERY 50 CUBIC YARDS OR A FRACTION THEREOF, PLACED PER DAY. REQUIRED CYLINDER(S) QUANTITIES AND TEST AGE AS FOLLOWS:
    (1) AT 7 DAYS
    (2) AT 28 DAYS
    ONE ADDITIONAL RESERVE CYLINDER TO BE TESTED UNDER THE DIRECTION OF THE ENGINEER, IF REQUIRED. IF 28 DAY STRENGTH IS ACHIEVED, THE ADDITIONAL CYLINDER(S) MAY BE DISCARDED.

STATE OF TEXAS · HEATH E. REYNOLDS · 113232 · LICENSED PROFESSIONAL ENGINEER

HEATH E. REYNOLDS, P.E. #113232

NO	LOC	DESCRIPTION OF REVISION	BY DATE	APPR DATE
4				
3				
2		REISSUED FOR CONSTRUCTION	JLG 8/23/17	HER 8/23/17
1		ISSUED FOR OWNER'S REVIEW	JLG 8/17/17	
0		ISSUED FOR CONSTRUCTION	JLG 2/17/17	

WORK ORDER NO.

Jefferson County Sheriff's Department

CONSTRUCTION DOCUMENTS
PROPOSED ELECTRICAL PLAN
Southeast Texas Regional Airport
Jefferson County, Texas

DRAWN: JLG | SCALE: 1/8" = 1'-0" | DATE: Aug 29, 2016
APPROVED: HER | CHECKED: DCH | NO. C2.02 | REV 2

The above drawings and specifications, and ideas, designs and arrangements represented thereby are and shall remain the property of the architect/engineers and no part thereof shall be copied, disclosed to others or used in connection with any other work or project other than the specific project for which they have been prepared and developed, without the written consent of the architect/engineers. Visual contact with these drawings and/or specifications shall constitute conclusive evidence of acceptance of these restrictions.

LJA Engineering, Inc.
Midstream Infrastructure
905 Orleans Street
Beaumont, Texas 77701
LJA Project No. B079-1013
Phone 409.813.1862
Fax 409.813.1916
FRN - F-1386

ISO PAGE
PAGE XX

C2.02

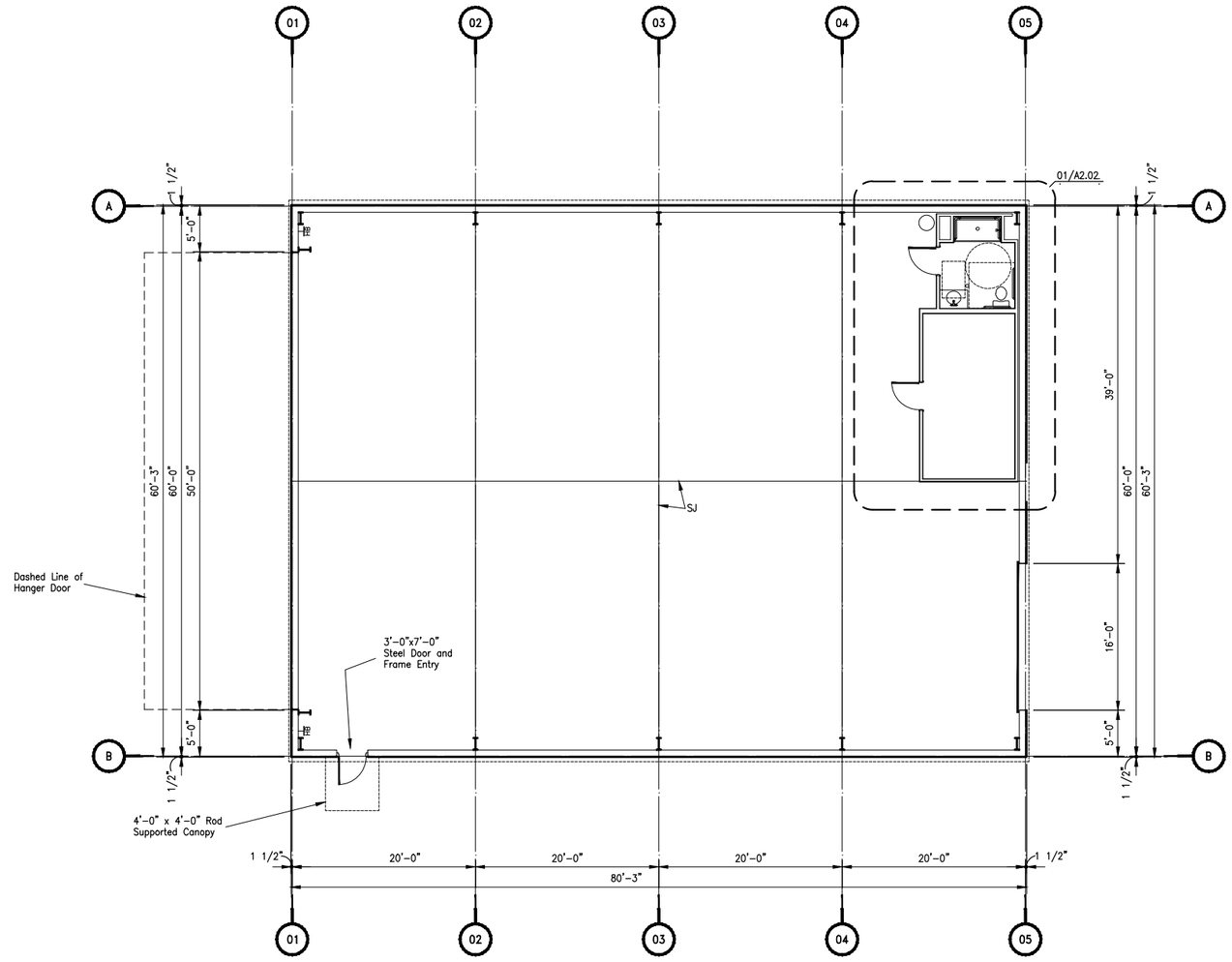

01 FLOOR PLAN - ARCHITECTURAL

Sheet File Name: County-TX-Jefferson\BPT\Hanger\Draw\PLOT-FINAL-02-A0201.dwg

Full Size Scale: 1/8" = 1'-0" Half Size Scale: 1/16" = 1'-0"

REGISTERED ARCHITECT
JOHN W. ALEX
STATE OF TEXAS
Expires 04-30-2018

NO	LOC	DESCRIPTION OF REVISION	BY DATE	APPR DATE
4				
3				
2				
1				
0		Issued for Construction	WAE 08/23/17	

WORK ORDER NO.

Jefferson County Sheriff's Department

CONSTRUCTION DOCUMENTS
FACILITY CONSTRUCTION
Southeast Texas Regional Airport
Jefferson County, Texas

DRAWN: SCALE: DATE: Aug 23, 2017
APPROVED: CHECKED: NO. A2.01 REV 0

ISO PAGE
PAGE XX

WRS
White Rock Studio
1407 San Saba Drive
Dallas, Texas 75218
Office: 214.763.0416
Constructability by Design

LJA Engineering, Inc.
2929 Briarpark Drive
Suite 600
Houston, Texas 77042
White Rock Studio (BR 2642) Project Number 221
Phone 713.953.5200
Fax 713.953.5026
FRN - F-1386

DOCUMENTS REDUCED TO 50% OF ORIGINALLY INTENDED PLOT SCALE

The above drawings and specifications, and ideas, designs and arrangements represented thereby are and shall remain the property of the architect/engineers and no part thereof shall be copied, disclosed to others or used in connection with any other work or project other than the specific project for which they have been prepared and developed, without the written consent of the architect/engineers. Visual contact with these drawings and/or specifications shall constitute conclusive evidence of acceptance of these restrictions.

samp_sc0005.dwg

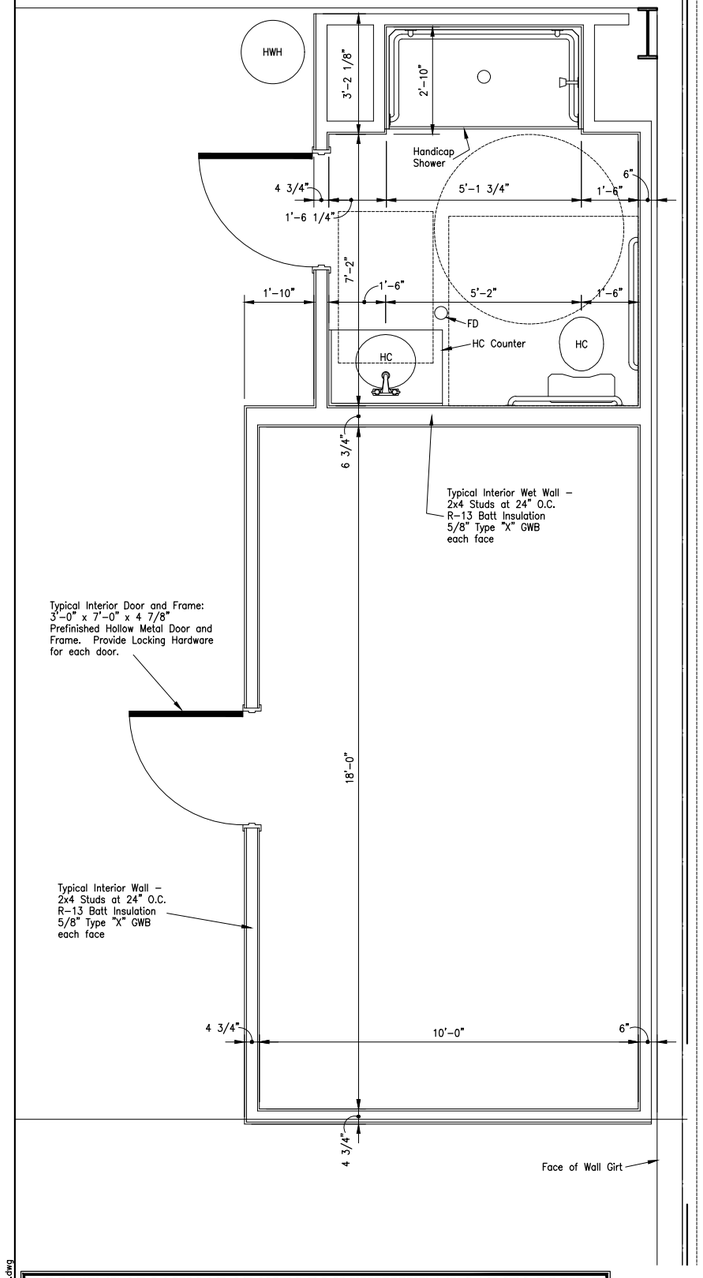

01 ENLARGED FLOOR PLAN - ARCHITECTURAL

Sheet File Name: County-TX-Jefferson\BPT\Hanger\Draw\PLOT-FINAL-02-A0202.dwg Full Size Scale: 1/2" = 1'-0" Half Size Scale: 1/4" = 1'-0"

DOCUMENTS REDUCED TO 50% OF ORIGINALLY INTENDED PLOT SCALE

The above drawings and specifications, and ideas, designs and arrangements represented thereby are and shall remain the property of the architect/engineers and no part thereof shall be copied, disclosed to others or used in connection with any other work or project other than the specific project for which they have been prepared and developed, without the written consent of the architect/engineers. Visual contact with these drawings and/or specifications shall constitute conclusive evidence of acceptance of these restrictions.

LJA Engineering, Inc.
2929 Briarpark Drive
Suite 600
Houston, Texas 77042
White Rock Studio (BR 2642) Project Number 221
Phone 713.953.5200
Fax 713.953.5026
FRN - F-1386

REGISTERED ARCHITECT STATE OF TEXAS
Expires 04-30-2018

WRS
White Rock Studio
1407 San Saba Drive
Dallas, Texas 75218
Office: 214.763.0416
Constructability by Design

NO	LOC	DESCRIPTION OF REVISION	BY DATE	APPR DATE
4				
3				
2				
1				
0		Issued for Construction	WAE 08/23/17	

WORK ORDER NO.

Jefferson County Sheriff's Department

CONSTRUCTION DOCUMENTS
FACILITY CONSTRUCTION
Southeast Texas Regional Airport
Jefferson County, Texas

DRAWN: SCALE: DATE: Aug 23, 2017
APPROVED: CHECKED: NO. A2.02 REV 0

ISO PAGE
PAGE XX

samp_sc0005.dwg

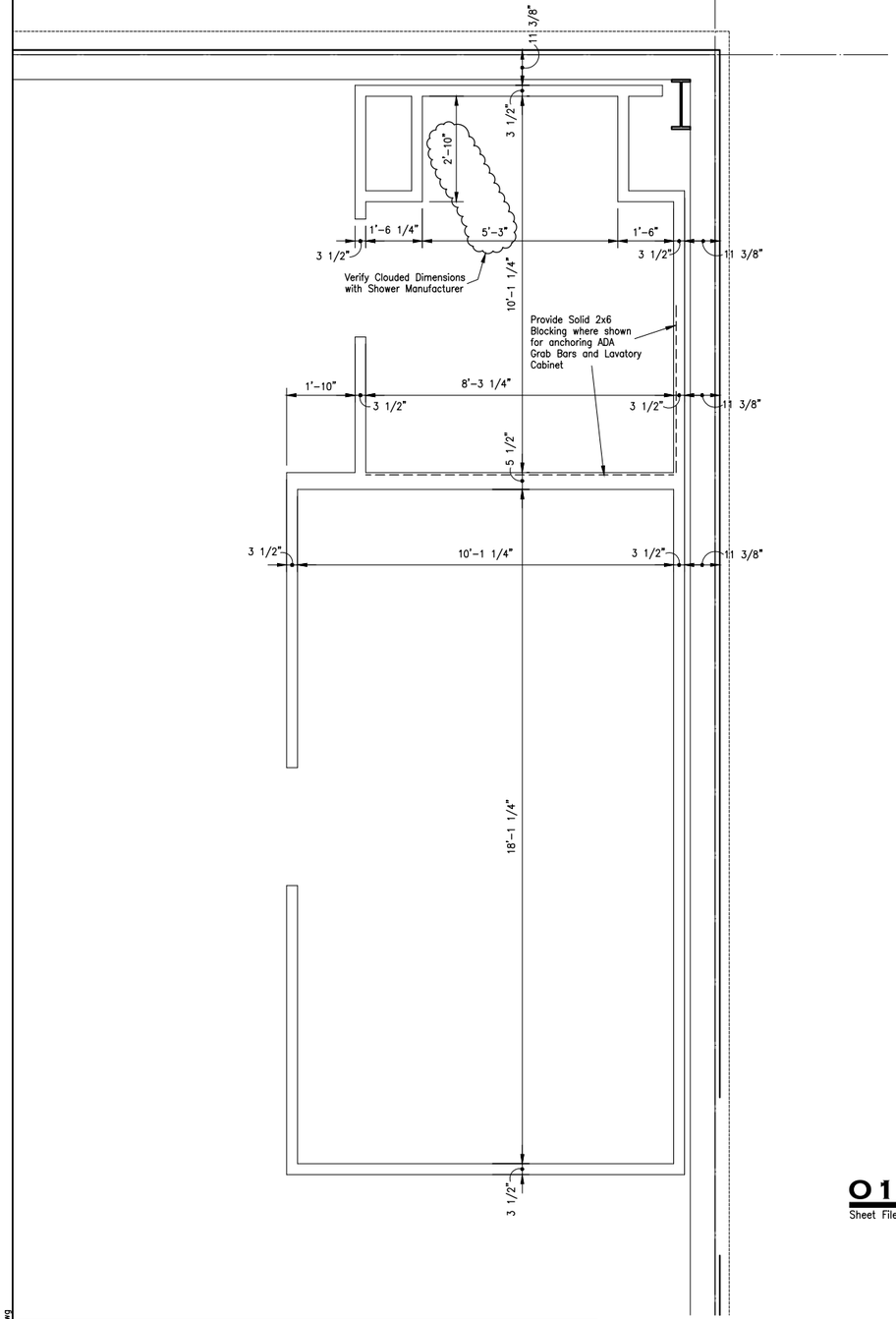

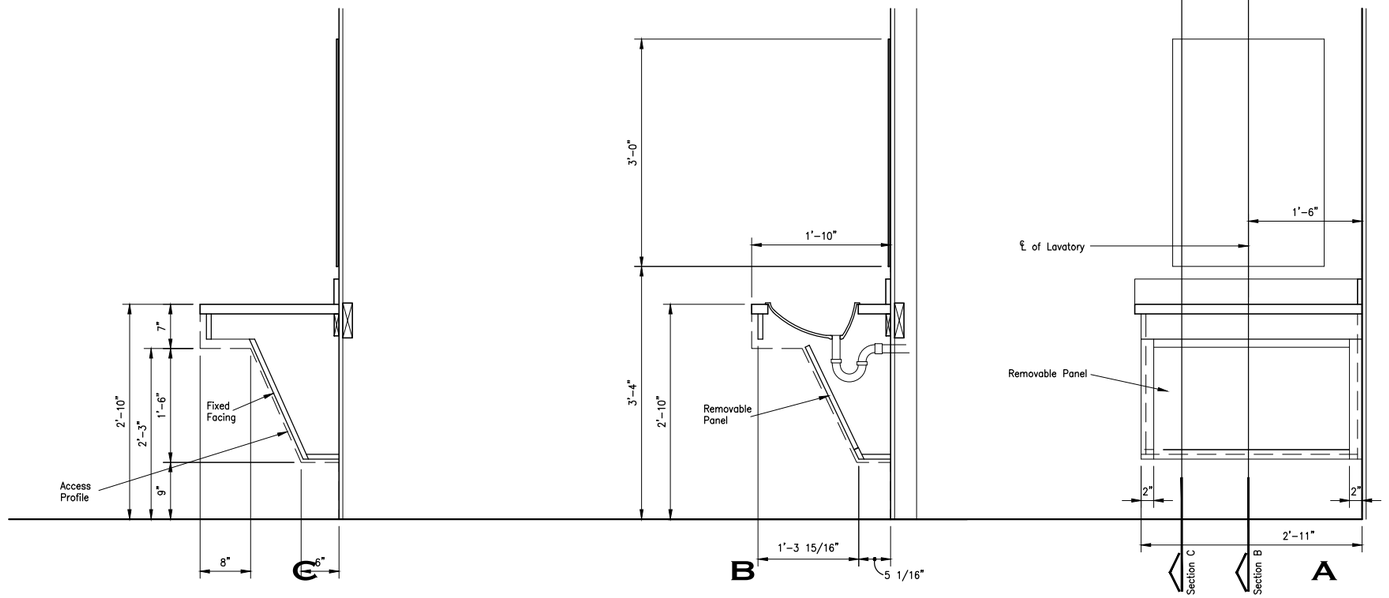

02 ENLARGED DETAILS - ACCESSIBLE LAVATORY

Full Size Scale: 1" = 1'-0" Half Size Scale: 1/2" = 1'-0"

01 ENLARGED FRAMING PLAN - ARCHITECTURAL

Sheet File Name: County-TX-Jefferson\BPT\Hanger\Draw\PLOT-PRELIM-01-A0202.dwg

Full Size Scale: 1/2" = 1'-0" Half Size Scale: 1/4" = 1'-0"

NO	LOC	DESCRIPTION OF REVISION	BY DATE	APPR DATE
4				
3				
2				
1				
0		Issued for Construction	WAE 08/23/17	

WORK ORDER NO.

Jefferson County Sheriff's Department

CONSTRUCTION DOCUMENTS
FACILITY CONSTRUCTION
Southeast Texas Regional Airport
Jefferson County, Texas

DRAWN: | SCALE: | DATE: Aug 23, 2017
APPROVED: | CHECKED: | NO. A2.03 | REV 0

WRS White Rock Studio
1407 San Saba Drive
Dallas, Texas 75218
Office: 214.763.0416
Constructability by Design

LJA Engineering, Inc.
2929 Briarpark Drive
Suite 600
Houston, Texas 77042
White Rock Studio (BR 2642) Project Number 221
Phone 713.953.5200
Fax 713.953.5026
FRN - F-1386

ISO PAGE
PAGE XX

DOCUMENTS REDUCED TO 50% OF ORIGINALLY INTENDED PLOT SCALE

The above drawings and specifications, and ideas, designs and arrangements represented thereby are and shall remain the property of the architect/engineers and no part thereof shall be copied, disclosed to others or used in connection with any other work or project other than the specific project for which they have been prepared and developed, without the written consent of the architect/engineers. Visual contact with these drawings and/or specifications shall constitute conclusive evidence of acceptance of these restrictions.

samp_sc0005.dwg

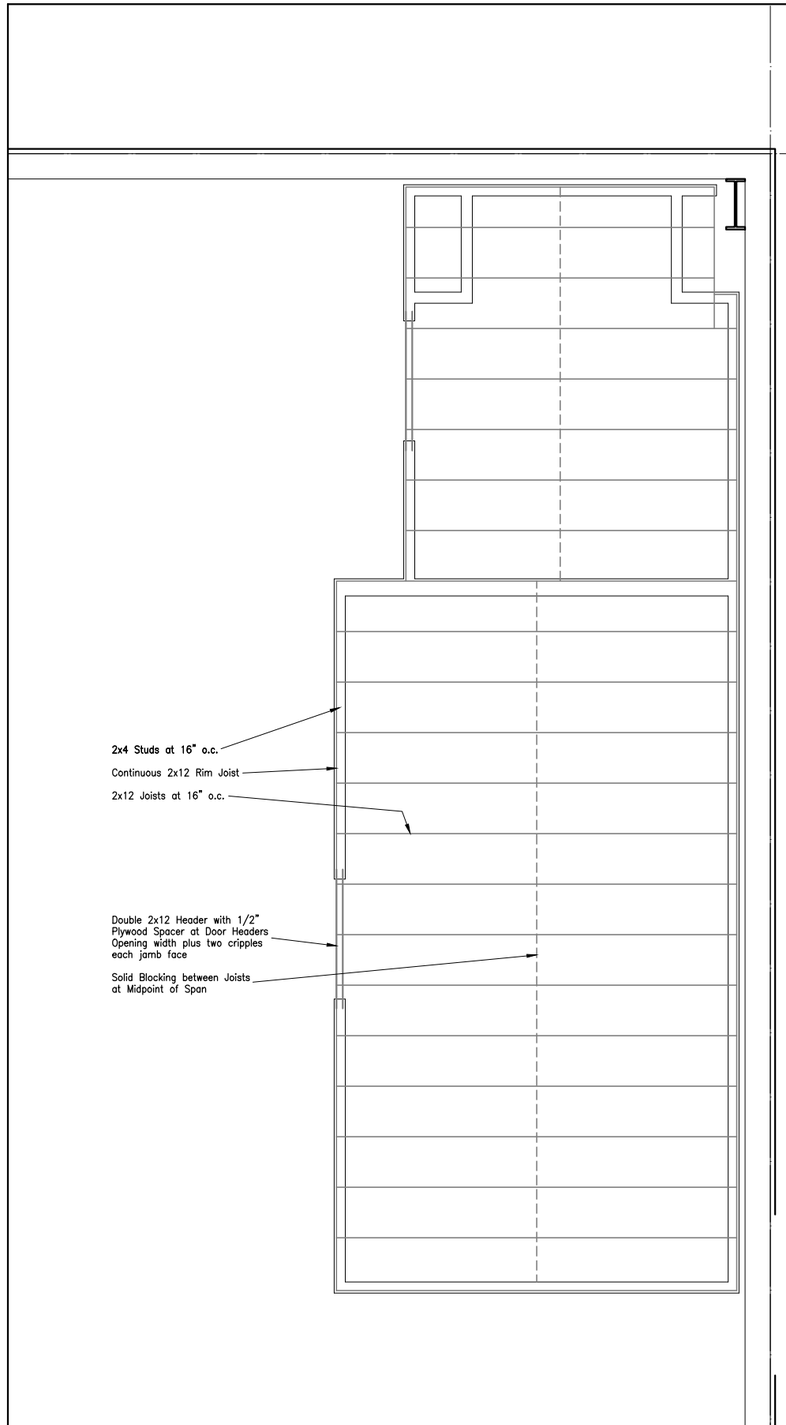

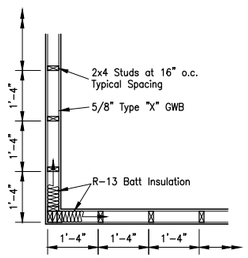

C

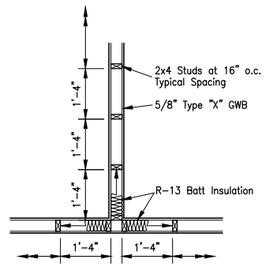

B

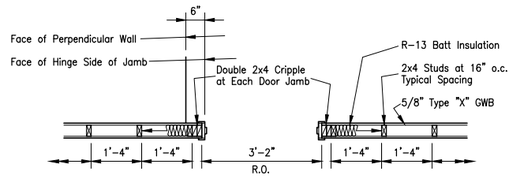

A

04 Enlarged Plan Details - Office Framing

Full Size Scale: 1/2" = 1'-0" Half Size Scale: 1/4" = 1'-0"

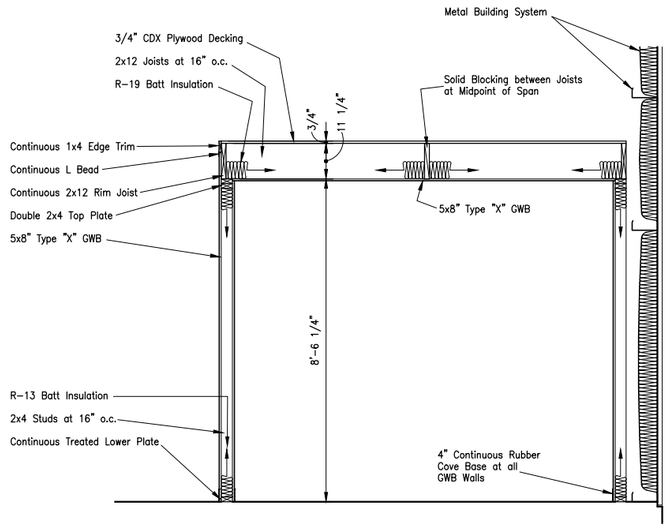

03 Enlarged Section Detail - Office Framing

Full Size Scale: 1/2" = 1'-0" Half Size Scale: 1/4" = 1'-0"

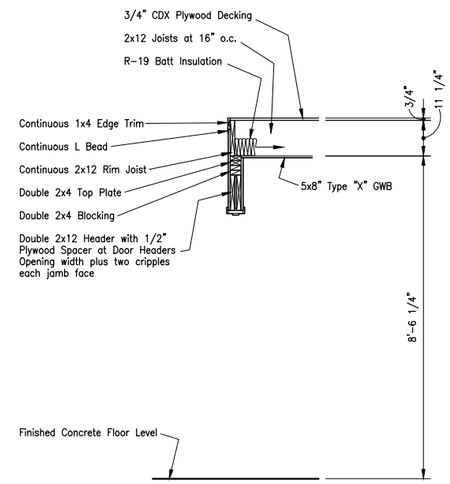

02 Enlarged Section Detail - Office Framing

Full Size Scale: 1/2" = 1'-0" Half Size Scale: 1/4" = 1'-0"

01 Enlarged Framing Plan - Architectural

Sheet File Name: County-TX-Jefferson\BPT\Hanger\Draw\PLOT-FINAL-02-A0204.dwg

Full Size Scale: 1/2" = 1'-0" Half Size Scale: 1/4" = 1'-0"

REGISTERED ARCHITECT STATE OF TEXAS
Expires 04-30-2018

NO	LOC	DESCRIPTION OF REVISION	BY DATE	APPR DATE
4				
3				
2				
1				
0		Issued for Construction	WAE 08/23/17	

WORK ORDER NO.

Jefferson County Sheriff's Department

CONSTRUCTION DOCUMENTS
FACILITY CONSTRUCTION
Southeast Texas Regional Airport
Jefferson County, Texas

DRAWN: SCALE: DATE: Aug 23, 2017
APPROVED: CHECKED: NO. A2.04 REV 0

WRS
White Rock Studio
1407 San Saba Drive
Dallas, Texas 75218
Office: 214.763.0416
Constructability by Design

ISO PAGE
PAGE XX

LJA Engineering, Inc.
2929 Briarpark Drive
Suite 600
Houston, Texas 77042
White Rock Studio (BR 2642) Project Number 221
Phone 713.953.5200
Fax 713.953.5026
FRN - F-1386

DOCUMENTS REDUCED TO 50% OF ORIGINALLY INTENDED PLOT SCALE

The above drawings and specifications, and ideas, designs and arrangements represented thereby are and shall remain the property of the architect/engineers and no part thereof shall be copied, disclosed to others or used in connection with any other work or project other than the specific project for which they have been prepared and developed, without the written consent of the architect/engineers. Visual contact with these drawings and/or specifications shall constitute conclusive evidence of acceptance of these restrictions.

samp_sc0005.dwg

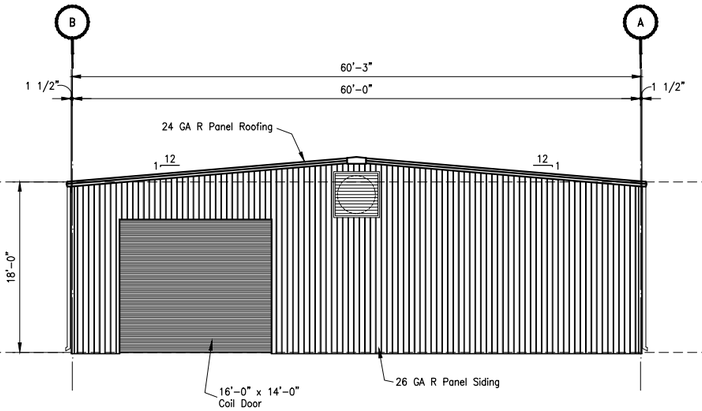

04 West Elevation - Architectural

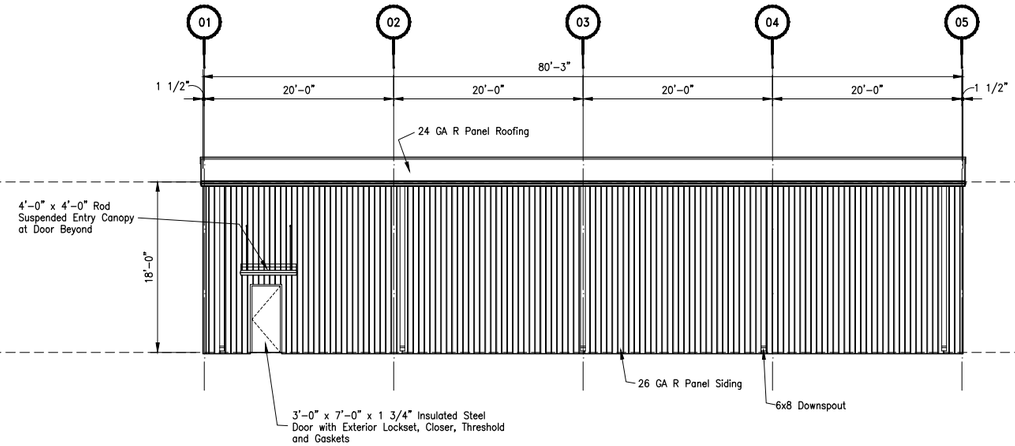

03 North Elevation - Architectural

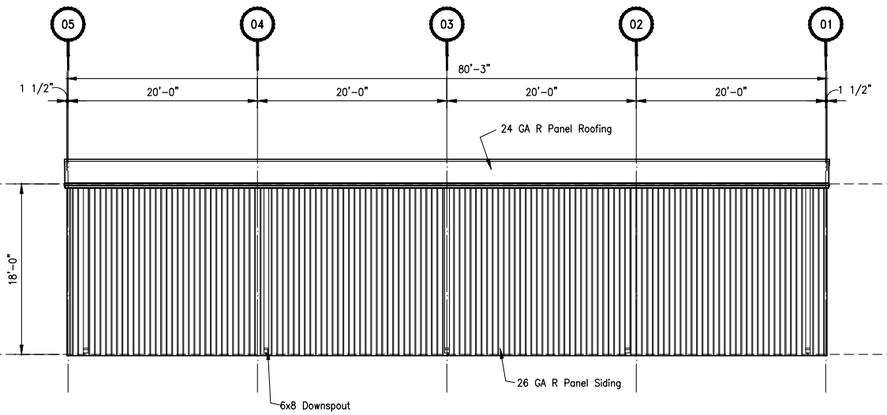

02 South Elevation - Architectural

Color Selections:
Building panel colors for siding, roof and trim shall match adjacent hangar building to the south assuming use of manufacturer's standard tan color palette.

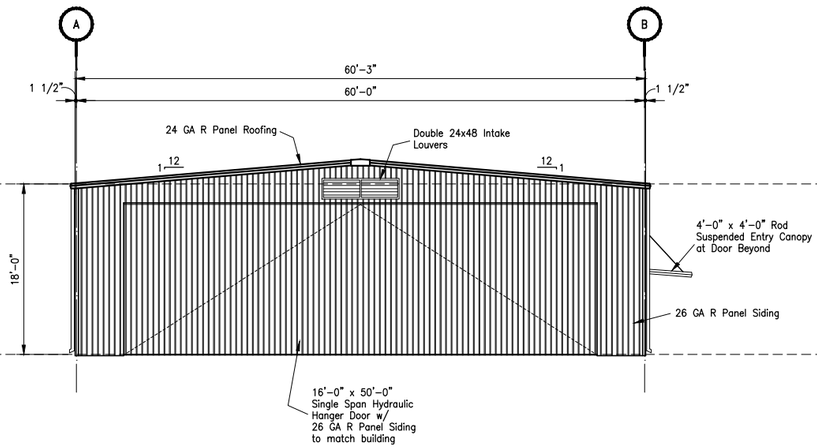

01 East Elevation - Architectural

Building Elevations - Architectural

Sheet File Name: County-TX-Jefferson\BPT\Hanger\Draw\PLOT-FINAL-02-A0301.dwg

Full Size Scale: 1/8" = 1'-0" Half Size Scale: 1/16" = 1'-0"

REGISTERED ARCHITECT STATE OF TEXAS
Expires 04-30-2018

NO	LOC	DESCRIPTION OF REVISION	BY DATE	APPR DATE
4				
3				
2				
1				
0		Issued for Construction	WAE 08/23/17	

WORK ORDER NO.

Jefferson County Sheriff's Department

CONSTRUCTION DOCUMENTS
FACILITY CONSTRUCTION
Southeast Texas Regional Airport
Jefferson County, Texas

DRAWN: SCALE: DATE: Aug 23, 2017
APPROVED: CHECKED: NO. A3.01 REV 0

WRS
White Rock Studio
1407 San Saba Drive
Dallas, Texas 75218
Office: 214.763.0416
Constructability by Design

ISO PAGE
PAGE XX

LJA Engineering, Inc.
2929 Briarpark Drive
Suite 600
Houston, Texas 77042
White Rock Studio (BR 2642) Project Number 221
Phone 713.953.5200
Fax 713.953.5026
FRN - F-1386

DOCUMENTS REDUCED TO 50% OF ORIGINALLY INTENDED PLOT SCALE

The above drawings and specifications, and ideas, designs and arrangements represented thereby are and shall remain the property of the architect/engineers and no part thereof shall be copied, disclosed to others or used in connection with any other work or project other than the specific project for which they have been prepared and developed, without the written consent of the architect/engineers. Visual contact with these drawings and/or specifications shall constitute conclusive evidence of acceptance of these restrictions.

samp_sc0005.dwg

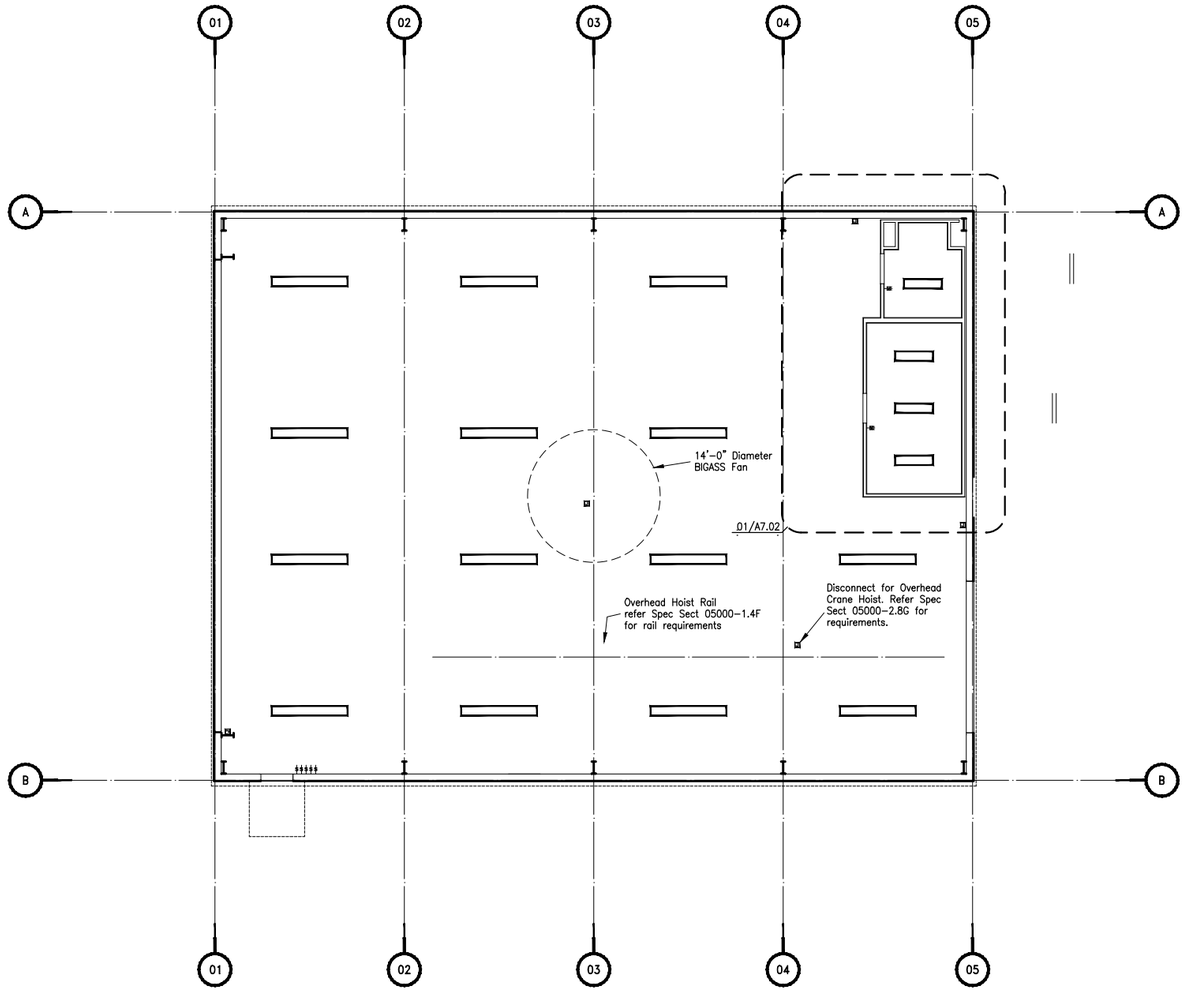

01 REFLECTED CEILING PLAN - ARCHITECTURAL

Sheet File Name: County-TX-Jefferson\BPT\Hanger\Draw\PLOT-FINAL-02-A0701.dwg

Full Size Scale: 1/8" = 1'-0" Half Size Scale: 1/16" = 1'-0"

DOCUMENTS REDUCED TO 50% OF ORIGINALLY INTENDED PLOT SCALE

The above drawings and specifications, and ideas, designs and arrangements represented thereby are and shall remain the property of the architect/engineers and no part thereof shall be copied, disclosed to others or used in connection with any other work or project other than the specific project for which they have been prepared and developed, without the written consent of the architect/engineers. Visual contact with these drawings and/or specifications shall constitute conclusive evidence of acceptance of these restrictions.

samp_sc0005.dwg

LJA Engineering, Inc.
2929 Briarpark Drive
Suite 600
Houston, Texas 77042
White Rock Studio (BR 2642) Project Number 221
Phone 713.953.5200
Fax 713.953.5026
FRN - F-1386

ISO PAGE
PAGE XX

WRS White Rock Studio
1407 San Saba Drive
Dallas, Texas 75218
Office: 214.763.0416
Constructability by Design

REGISTERED ARCHITECT STATE OF TEXAS
Expires 04-30-2018

NO	LOC	DESCRIPTION OF REVISION	BY DATE	APPR DATE
4				
3				
2				
1				
0		Issued for Construction	WAE 08/23/17	

WORK ORDER NO.

Jefferson County Sheriff's Department

CONSTRUCTION DOCUMENTS
FACILITY CONSTRUCTION
Southeast Texas Regional Airport
Jefferson County, Texas

DRAWN: | SCALE: - | DATE: Aug 23, 2017
APPROVED: | CHECKED: | NO. A7.01 | REV 0

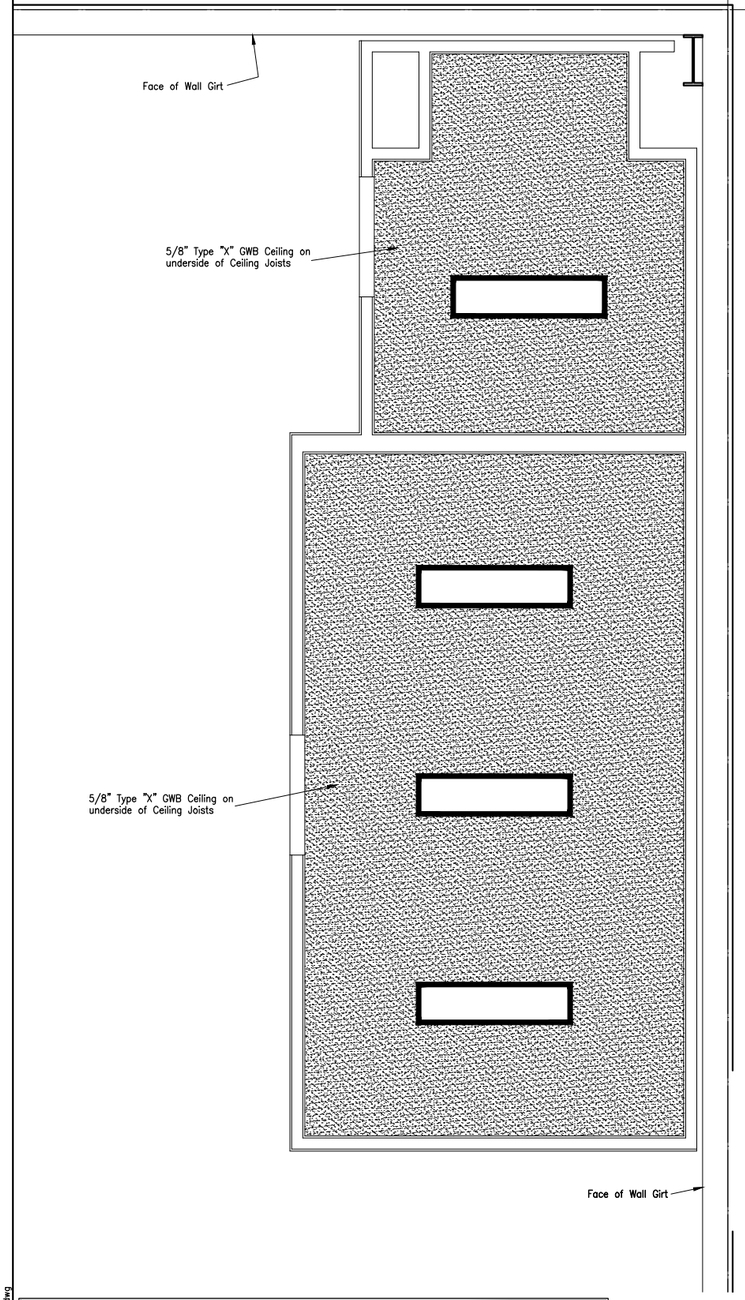

01 ENLARGED REFLECTED CEILING PLAN - ARCHITECTURAL

Sheet File Name: County-TX-Jefferson\BPT\Hanger\Draw\PLOT-FINAL-02-A0702.dwg Full Size Scale: 1/2" = 1'-0" Half Size Scale: 1/4" = 1'-0"

DOCUMENTS REDUCED TO 50% OF ORIGINALLY INTENDED PLOT SCALE

The above drawings and specifications, and ideas, designs and arrangements represented thereby are and shall remain the property of the architect/engineers and no part thereof shall be copied, disclosed to others or used in connection with any other work or project other than the specific project for which they have been prepared and developed, without the written consent of the architect/engineers. Visual contact with these drawings and/or specifications shall constitute conclusive evidence of acceptance of these restrictions.

samp_sc0005.dwg

LJA Engineering, Inc.
2929 Briarpark Drive
Suite 600
Houston, Texas 77042
Phone 713.953.5200
Fax 713.953.5026
FRN - F-1386
White Rock Studio (BR 2642) Project Number 221

ISO PAGE
PAGE XX

WRS
White Rock Studio
1407 San Saba Drive
Dallas, Texas 75218
Office: 214.763.0416
Constructability by Design

REGISTERED ARCHITECT STATE OF TEXAS
Expires 04-30-2018

NO	LOC	DESCRIPTION OF REVISION	BY DATE	APPR DATE
4				
3				
2				
1				
0		Issued for Construction	WAE 08/23/17	

WORK ORDER NO.

Jefferson County Sheriff's Department

CONSTRUCTION DOCUMENTS
FACILITY CONSTRUCTION
Southeast Texas Regional Airport
Jefferson County, Texas

DRAWN:
SCALE:
APPROVED:
CHECKED:
DATE: Aug 23, 2017
NO. A7.02
REV 0

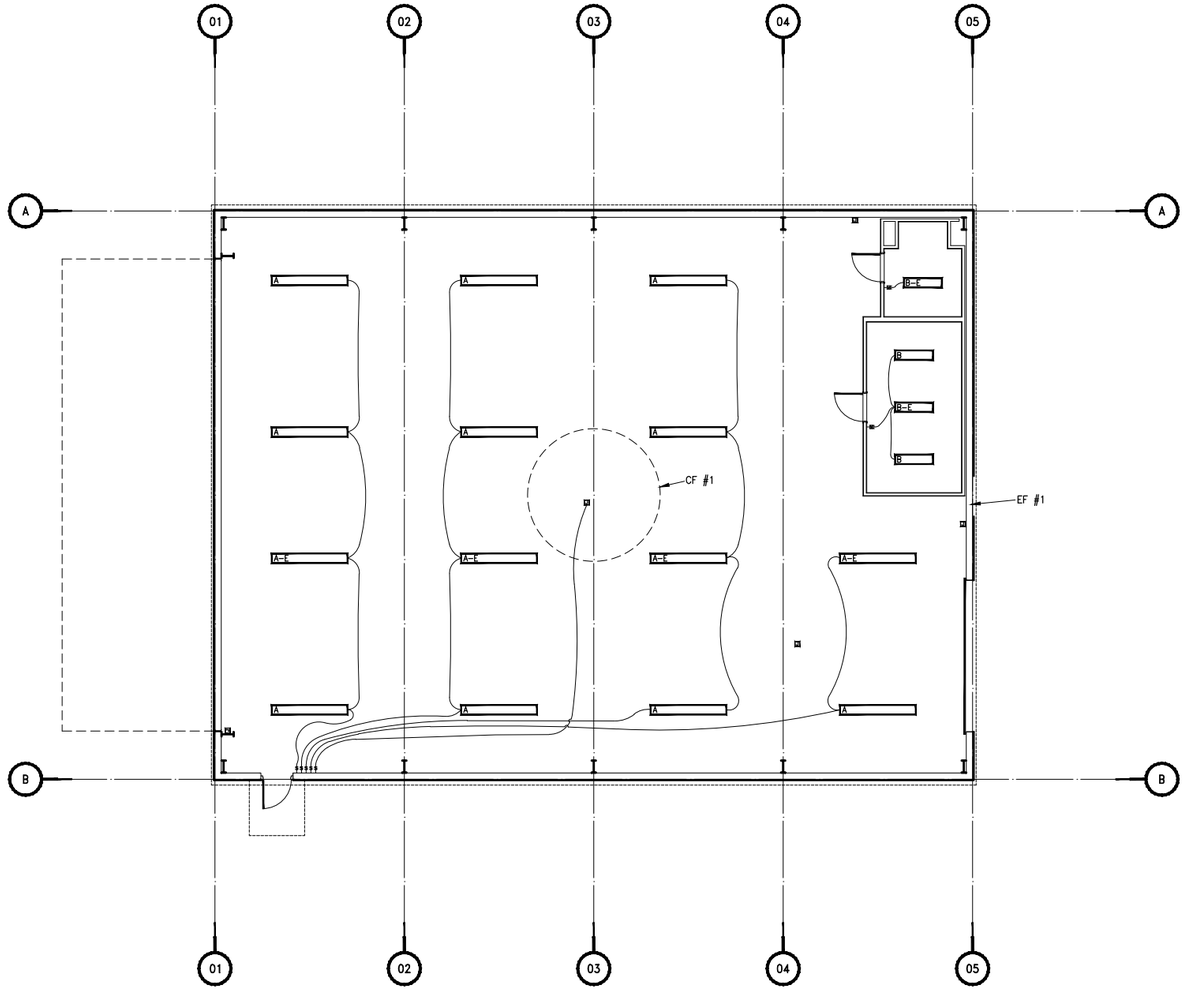

01 REFLECTED CEILING PLAN - ELECTRICAL LIGHTING

Sheet File Name: County-TX-Jefferson\BPT\Hanger\Draw\PLOT-FINAL-02-EL0701.dwg

Full Size Scale: 1/8" = 1'-0" Half Size Scale: 1/16" = 1'-0"

DOCUMENTS REDUCED TO 50% OF ORIGINALLY INTENDED PLOT SCALE

The above drawings and specifications, and ideas, designs and arrangements represented thereby are and shall remain the property of the architect/engineers and no part thereof shall be copied, disclosed to others or used in connection with any other work or project other than the specific project for which they have been prepared and developed, without the written consent of the architect/engineers. Visual contact with these drawings and/or specifications shall constitute conclusive evidence of acceptance of these restrictions.

LJA Engineering, Inc.
2929 Briarpark Drive
Suite 600
Houston, Texas 77042
White Rock Studio (BR 2642) Project Number 221
Phone 713.953.5200
Fax 713.953.5026
FRN - F-1386

ISO PAGE
PAGE XX

WRS
White Rock Studio
1407 San Saba Drive
Dallas, Texas 75218
Office: 214.763.0416
Constructability by Design

REGISTERED ARCHITECT STATE OF TEXAS
Expires 04-30-2018
08/23/17

NO	LOC	DESCRIPTION OF REVISION	BY DATE	APPR DATE
4				
3				
2				
1				
0		Issued for Construction	WAE 08/23/17	

WORK ORDER NO.

Jefferson County Sheriff's Department

CONSTRUCTION DOCUMENTS
FACILITY CONSTRUCTION
Southeast Texas Regional Airport
Jefferson County, Texas

DRAWN:
SCALE:
APPROVED:
CHECKED:
DATE: Aug 23, 2017
NO. EL7.01
REV 0

samp_sc0005.dwg

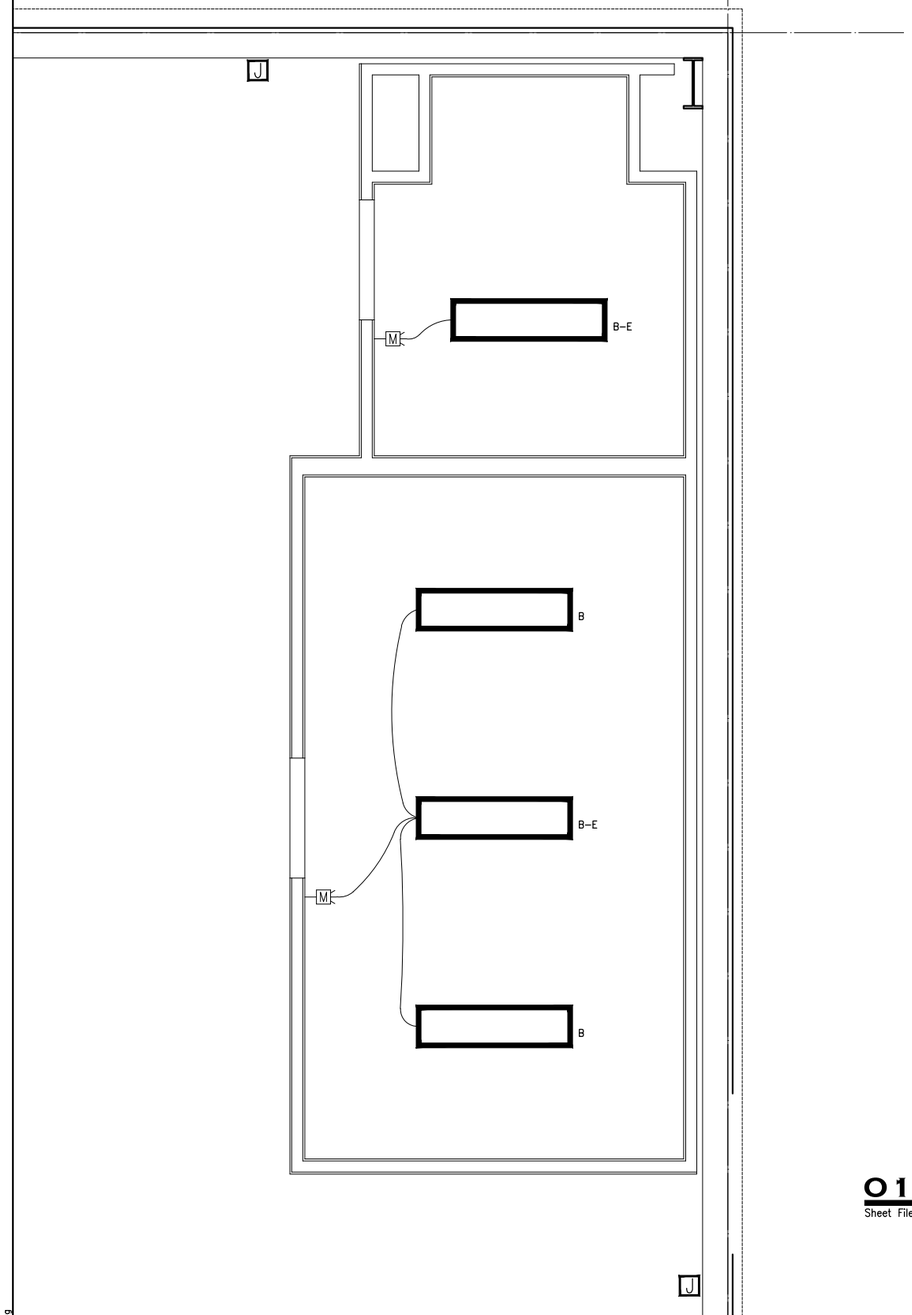

Lighting Fixture Selections

Fixture Designation	Fixture Manufacturer	Model Number	Electrical Power Requirements	Lamp Type & Quantity	Mounting
A	Lithonia	TMS8ST 4 32 SLB WD 120 1/4 GEB10PS	120V	8 – 32W T8	Suspended 14'-0" AFF
A-E	Lithonia	TMS8ST 4 32 SLB WD 120 1/4 GEB10PS EL65	120V	8 – 32W T8	Suspended 14'-0" AFF
B	Lithonia	SB2 32 120 GEB10PS	120V	2 – 32W T8	Surface (Ceiling) Mounted
B-E	Lithonia	SB2 32 120 GEB10PS EL	120V	2 – 32W T8	Surface (Ceiling) Mounted

ENLARGED REFLECTED
01 CEILING PLAN - ELECTRICAL LIGHTING

Sheet File Name: County-TX-Jefferson\BPT\Hanger\Draw\PLOT-FINAL-02-EP0702.dwg Full Size Scale: 1/2" = 1'-0" Half Size Scale: 1/4" = 1'-0"

REGISTERED ARCHITECT STATE OF TEXAS
08/23/17
Expires 04-30-2018

NO	LOC	DESCRIPTION OF REVISION	BY DATE	APPR DATE
4				
3				
2				
1				
0		Issued for Construction	WAE 08/23/17	

WORK ORDER NO.

Jefferson County Sheriff's Department

CONSTRUCTION DOCUMENTS
FACILITY CONSTRUCTION
Southeast Texas Regional Airport
Jefferson County, Texas

DRAWN: SCALE: DATE: Aug 23, 2017
APPROVED: CHECKED: NO. EL7.02 REV 0

LJA Engineering, Inc.
2929 Briarpark Drive Phone 713.953.5200
Suite 600 Fax 713.953.5026
Houston, Texas 77042 FRN - F-1386
White Rock Studio (BR 2642) Project Number 221

ISO PAGE
PAGE XX

WRS
White Rock Studio
1407 San Saba Drive
Dallas, Texas 75218
Office: 214.763.0416
Constructability by Design

DOCUMENTS REDUCED TO 50% OF ORIGINALLY INTENDED PLOT SCALE

The above drawings and specifications, and ideas, designs and arrangements represented thereby are and shall remain the property of the architect/engineers and no part thereof shall be copied, disclosed to others or used in connection with any other work or project other than the specific project for which they have been prepared and developed, without the written consent of the architect/engineers. Visual contact with these drawings and/or specifications shall constitute conclusive evidence of acceptance of these restrictions.

samp_sc0005.dwg

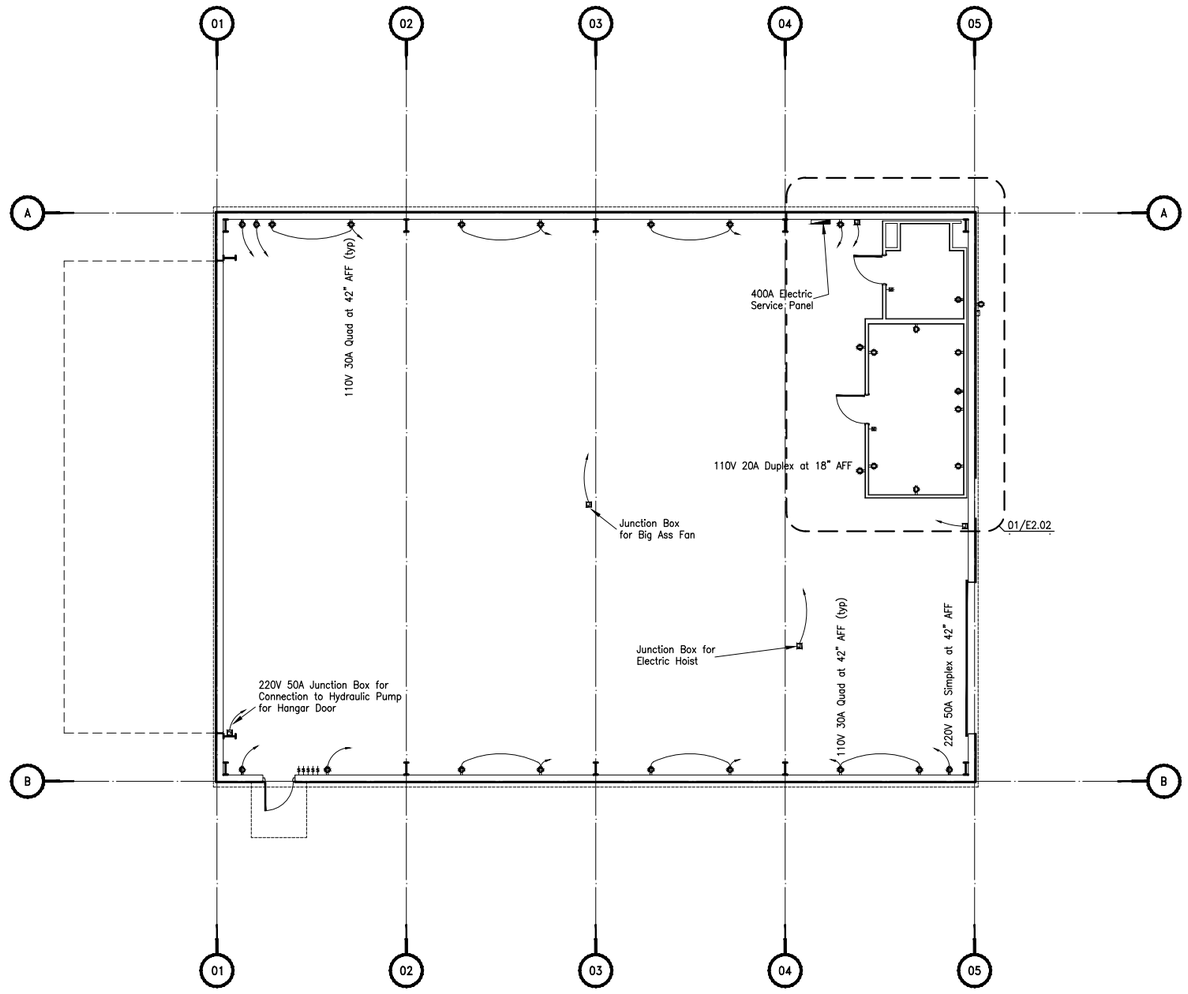

01 FLOOR PLAN - ELECTRICAL POWER

Sheet File Name: County-TX-Jefferson\BPT\Hanger\Draw\PLOT-FINAL-02-EL0201.dwg

Full Size Scale: 1/8" = 1'-0" Half Size Scale: 1/16" = 1'-0"

DOCUMENTS REDUCED TO 50% OF ORIGINALLY INTENDED PLOT SCALE

The above drawings and specifications, and ideas, designs and arrangements represented thereby are and shall remain the property of the architect/engineers and no part thereof shall be copied, disclosed to others or used in connection with any other work or project other than the specific project for which they have been prepared and developed, without the written consent of the architect/engineers. Visual contact with these drawings and/or specifications shall constitute conclusive evidence of acceptance of these restrictions.

LJA Engineering, Inc.
2929 Briarpark Drive
Suite 600
Houston, Texas 77042
White Rock Studio (BR 2642) Project Number 221
Phone 713.953.5200
Fax 713.953.5026
FRN - F-1386

ISO PAGE
PAGE XX

WRS
White Rock Studio
1407 San Saba Drive
Dallas, Texas 75218
Office: 214.763.0416
Constructability by Design

NO	LOC	DESCRIPTION OF REVISION	BY DATE	APPR DATE
4				
3				
2				
1				
0		Issued for Construction	WAE 08/23/17	

WORK ORDER NO.

Jefferson County Sheriff's Department

CONSTRUCTION DOCUMENTS
FACILITY CONSTRUCTION
Southeast Texas Regional Airport
Jefferson County, Texas

DRAWN: SCALE: DATE: Aug 23, 2017
APPROVED: CHECKED: NO. EP2.01 REV 0

samp_sc0005.dwg

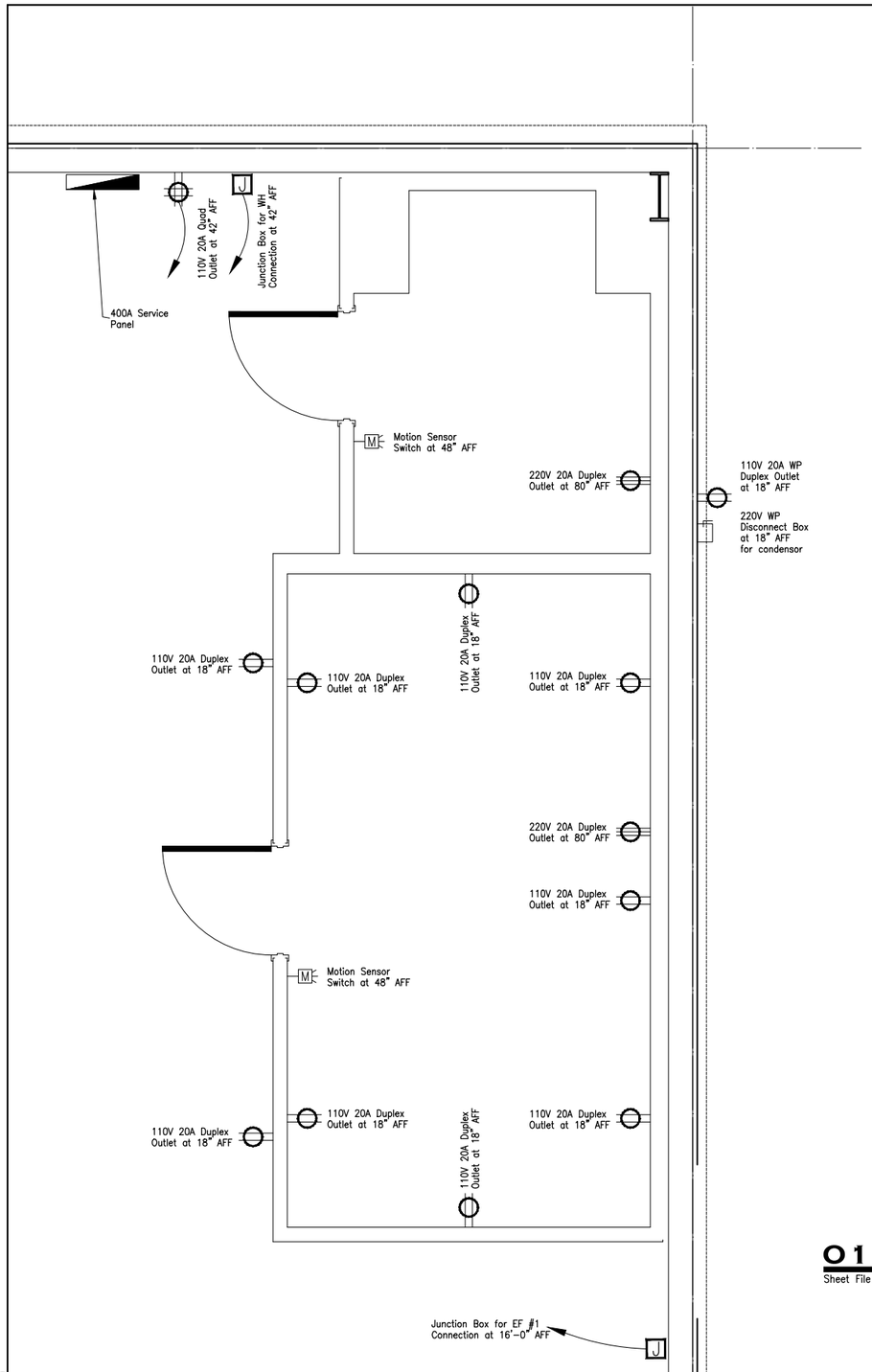

Power Notes

1. Installation of all fixtures, control and wiring shall comply with all Federal, State and Local Laws and Regulation having jurisdiction over the installation of electrical lighting and power.
2. Height of all user accessed controls shall comply with requirements of the Americans with Disabilities Act and Texas Accessibility Standards.

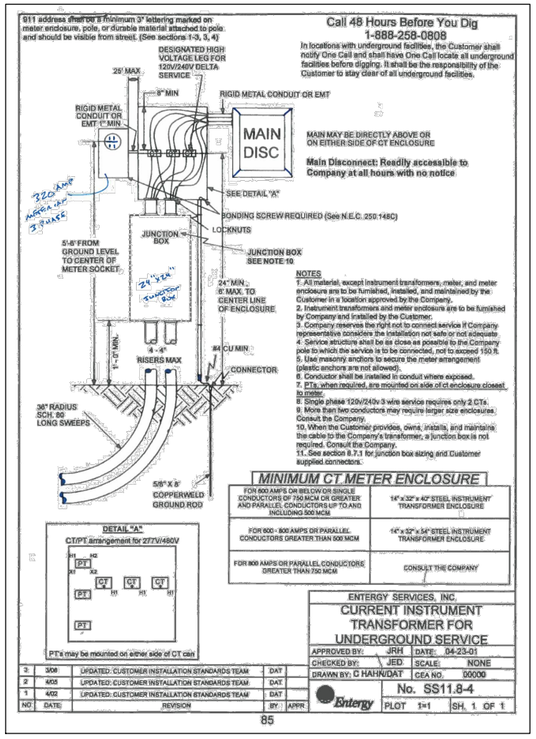

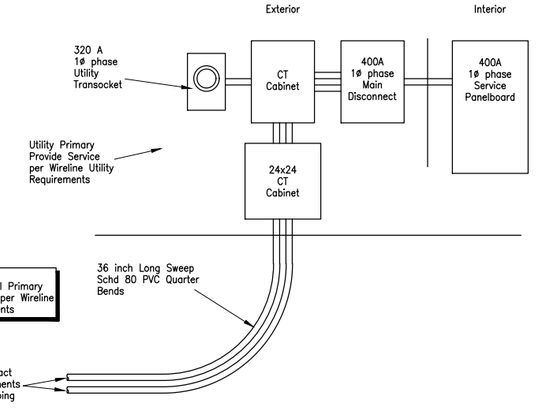

Electrical Riser Diagram

01 ENLARGED FLOOR PLAN - ELECTRICAL POWER

Sheet File Name: County-TX-Jefferson\BPT\Hanger\Draw\PLOT-FINAL-02-EP0202.dwg Full Size Scale: 1/2" = 1'-0" Half Size Scale: 1/4" = 1'-0"

DOCUMENTS REDUCED TO 50% OF originally INTENDED PLOT SCALE

The above drawings and specifications, and ideas, designs and arrangements represented thereby are and shall remain the property of the architect/engineers and no part thereof shall be copied, disclosed to others or used in connection with any other work or project other than the specific project for which they have been prepared and developed, without the written consent of the architect/engineers. Visual contact with these drawings and/or specifications shall constitute conclusive evidence of acceptance of these restrictions.

samp_sc0005.dwg

LJA Engineering, Inc.
2929 Briarpark Drive
Suite 600
Houston, Texas 77042
White Rock Studio (BR 2642) Project Number 221
Phone 713.953.5200
Fax 713.953.5026
FRN - F-1386

ISO PAGE
PAGE XX

WRS White Rock Studio
1407 San Saba Drive
Dallas, Texas 75218
Office: 214.763.0416
Constructability by Design

REGISTERED ARCHITECT * STATE OF TEXAS * Expires 04-30-2018

NO	LOC	DESCRIPTION OF REVISION	BY DATE	APPR DATE
4				
3				
2				
1				
0		Issued for Construction	WAE 08/23/17	

WORK ORDER NO.

Jefferson County Sheriff's Department

CONSTRUCTION DOCUMENTS
FACILITY CONSTRUCTION
Southeast Texas Regional Airport
Jefferson County, Texas

DRAWN: SCALE: DATE: Aug 23, 2017
APPROVED: CHECKED: NO. EP2.02 REV 0

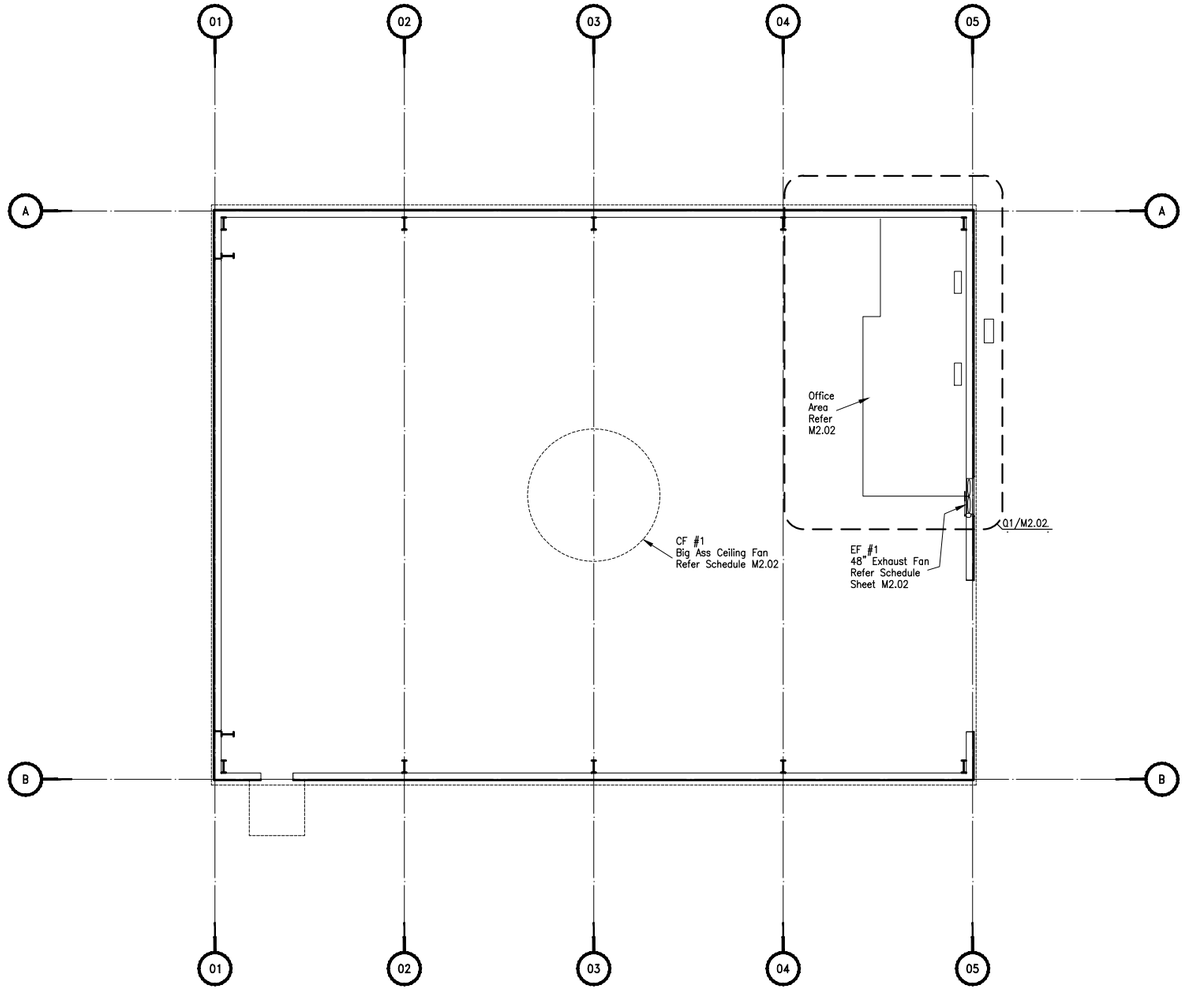

01 FLOOR PLAN - MECHANICAL

Sheet File Name: County-TX-Jefferson\BPT\Hanger\Draw\PLOT-FINAL-02-M0201.dwg

Full Size Scale: 1/8" = 1'-0" Half Size Scale: 1/16" = 1'-0"

REGISTERED ARCHITECT STATE OF TEXAS
Expires 04-30-2018

NO	LOC	DESCRIPTION OF REVISION	BY DATE	APPR DATE
4				
3				
2				
1				
0		Issued for Construction	WAE 08/23/17	

WORK ORDER NO.

Jefferson County Sheriff's Department

CONSTRUCTION DOCUMENTS
FACILITY CONSTRUCTION
Southeast Texas Regional Airport
Jefferson County, Texas

DRAWN: | SCALE: | DATE: Aug 23, 2017
APPROVED: | CHECKED: | NO. M2.01 | REV 0

ISO PAGE
PAGE XX

WRS White Rock Studio
1407 San Saba Drive
Dallas, Texas 75218
Office: 214.763.0416
Constructability by Design

LJA Engineering, Inc.
2929 Briarpark Drive Phone 713.953.5200
Suite 600 Fax 713.953.5026
Houston, Texas 77042 FRN - F-1386
White Rock Studio (BR 2642) Project Number 221

DOCUMENTS REDUCED TO 50% OF ORIGINALLY INTENDED PLOT SCALE

The above drawings and specifications, and ideas, designs and arrangements represented thereby are and shall remain the property of the architect/engineers and no part thereof shall be copied, disclosed to others or used in connection with any other work or project other than the specific project for which they have been prepared and developed, without the written consent of the architect/engineers. Visual contact with these drawings and/or specifications shall constitute conclusive evidence of acceptance of these restrictions.

samp_sc0005.dwg

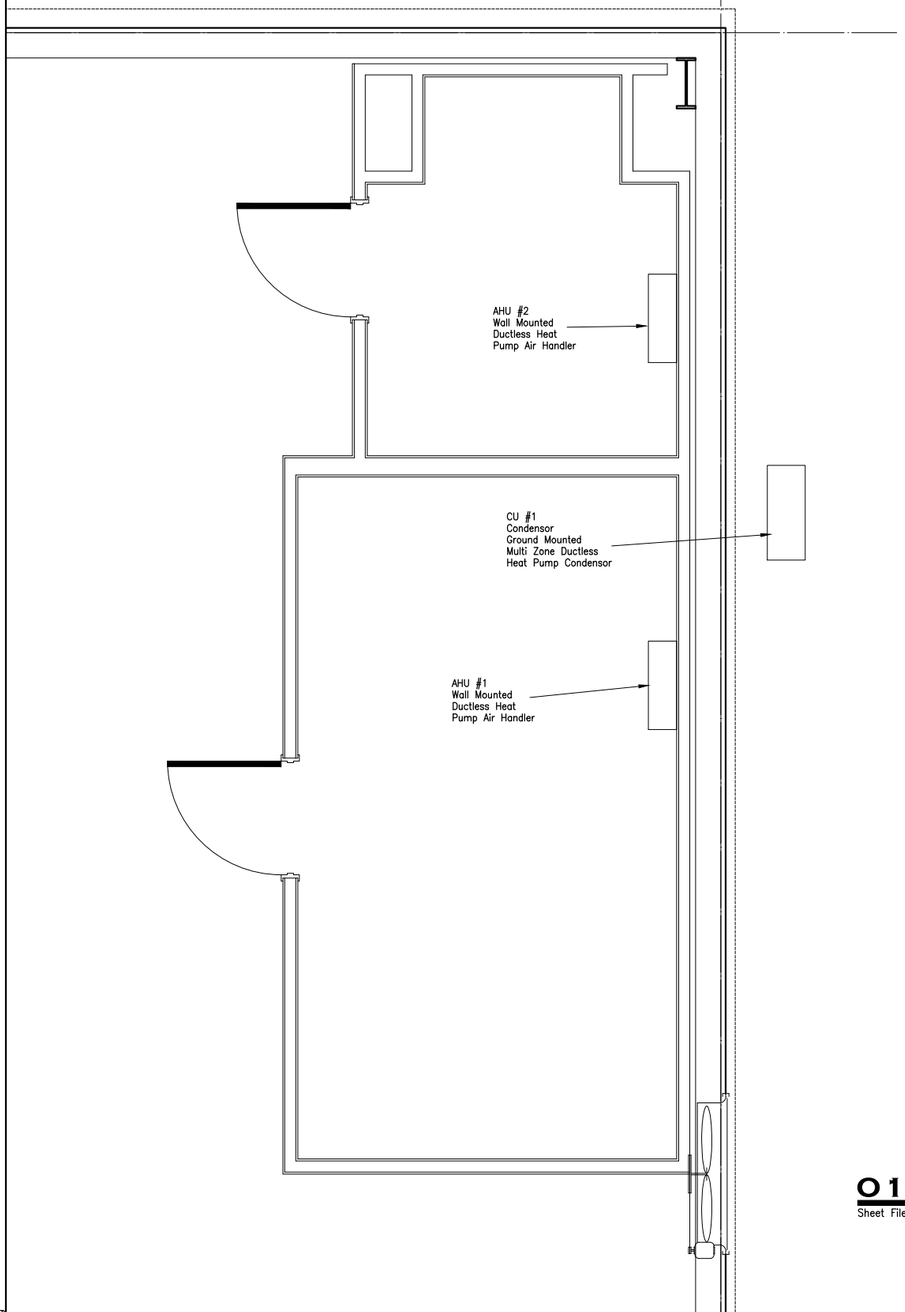

HVAC Equipment Selections

Equipment Designation	Equipment Manufacturer	Model Number	Cooling Capacity	Heating Capacity	Electrical Power Requirements
AHU #1	Mitsubishi	MSZ-GL09NA	9,000 BTU/h /W	10,900 BTU/h /W	208/230V, 1-Phase, 60Hz
AHU #2	Mitsubishi	MSZ-GL06NA	6,000 BTU/h /W	7,200 BTU/h /W	208/230V, 1-Phase, 60Hz
CU #1	Mitsubishi	MXZ-2B20NA	20,000 BTU/h /W	22,000 BTU/h /W	208/230V, 1-Phase, 60Hz

Ceiling Fan

Equipment Designation	Equipment Manufacturer	Model Number	Fan Diameter	Electrical Power Requirements
CF #1	BIGASS Fans	F-PF61-1401S34	14'-0"	110-125V, 1-Phase, 50/60Hz

Exhaust Fan

Equipment Designation	Equipment Manufacturer	Model Number	Fan Diameter
EF #1	Fantech	1SDE30DB	48"

01 ENLARGED FLOOR PLAN - MECHANICAL

Sheet File Name: County-TX-Jefferson\BPT\Hanger\Draw\PLOT-FINAL-02-M0202.dwg Full Size Scale: 1/2" = 1'-0" Half Size Scale: 1/4" = 1'-0"

REGISTERED ARCHITECT STATE OF TEXAS
Expires 04-30-2018
08/23/17

NO	LOC	DESCRIPTION OF REVISION	BY DATE	APPR DATE
4				
3				
2				
1				
0		Issued for Construction	WAE 08/23/17	

WORK ORDER NO.

Jefferson County Sheriff's Department

CONSTRUCTION DOCUMENTS
FACILITY CONSTRUCTION
Southeast Texas Regional Airport
Jefferson County, Texas

DRAWN: SCALE: DATE: Aug 23, 2017
APPROVED: CHECKED: NO. M2.02 REV 0

LJA Engineering, Inc.
2929 Briarpark Drive
Suite 600
Houston, Texas 77042
White Rock Studio (BR 2642) Project Number 221
Phone 713.953.5200
Fax 713.953.5026
FRN - F-1386

ISO PAGE
PAGE XX

WRS
White Rock Studio
1407 San Saba Drive
Dallas, Texas 75218
Office: 214.763.0416
Constructability by Design

DOCUMENTS REDUCED TO 50% OF ORIGINALLY INTENDED PLOT SCALE

The above drawings and specifications, and ideas, designs and arrangements represented thereby are and shall remain the property of the architect/engineers and no part thereof shall be copied, disclosed to others or used in connection with any other work or project other than the specific project for which they have been prepared and developed, without the written consent of the architect/engineers. Visual contact with these drawings and/or specifications shall constitute conclusive evidence of acceptance of these restrictions.

samp_sc0005.dwg

M-SERIES — SUBMITTAL DATA: MSZ-GL06NA-U1

6,000 BTU/H WALL-MOUNTED INDOOR UNIT FOR MXZ-C MULTI-ZONE HEAT-PUMP SYSTEMS

MITSUBISHI ELECTRIC

Job Name:

System Reference: Date:

Indoor Unit: MSZ-GL09NA-U1

Wireless Remote Controller

SPECIFICATIONS:

Rated Capacity*		
Cooling[1]	Btuh / W	6,000
Heating at 47º F[2]	Btuh / W	7,200

Rating Conditions per AHRI Standard:
[1] Cooling | Indoor: 80º F/27º C/DB / 67º F/19º C/WB; Outdoor: 95º F/35º C/DB / 75º F/24º C/WB
[2] Heating at 47ºF | Indoor: 70º F/ 21º C/DB / 60º F /16º C/WB; Outdoor: 47º F/ 8º C/DB / 43º F /6º C/WB

For data on specific indoor units (all ducted, all non-ducted, and both ducted and non-ducted) combinations, see the MXZ Technical and Service Manual.

Applications should be restricted to comfort cooling only; equipment cooling applications are not recommended for low ambient temperature conditions.

Electrical Power Requirements		208 / 230V, 1-Phase, 60 Hz
Minimum Circuit Ampacity (MCA)	A	1
Blower Motor (ECM)	FLA.	0.76
Blower Motor Output	W	30
Field Drainpipe Size O.D.	In.(mm)	5/8 (15)

Airflow Rate (Quiet - Lo - Med - Hi - Super Hi)			
Cooling	DRY	CFM	145-170-237-321-399
	WET		109-134-201-286-364
Heating	DRY		145-170-237-321-406

Sound Pressure Level (Quiet - Lo - Med - Hi - Super Hi)		
Cooling	dB(A)	19-22-30-37-43
Heating		19-22-30-37-43

External Dimensions (H x W x D)	In.(mm)	11-5/8 x 31-7/16 x 9-1/8 (295 x 798 x 232)
Net Weight	Lbs.(kg)	22 (10)
External Finish		Munsell 1.0Y 9.2 / 0.2

Refrigerant Piping (Flared)		
Liquid (High Pressure)	In.(mm)	1/4 (6.35)
Gas (Low Pressure)		3/8 (9.52)

ACCESSORIES:

Indoor Unit
- Condensate Pump (BlueDiamond X87-711/721; 115/230V)
- Condensate Pump (Sauermann SI30-115/230; 115/230V)
- Anti-Allergy Enzyme Filter (MAC-408FT-E)
- Platinum Catalyst Deodorizing Filter (MAC-309FT-E)
- Drain Pan Level Sensor (DPLS2)

Controls
- Wireless Controller (MHK1)
- Wired Remote Controller PAR-31MAA (Requires MAC-333IF-E)
- Wireless Interface for kumo cloud™ (PAC-WHS01WF-E)
- Thermostat Interface (PAC-US644CN-1)

Specifications are subject to change without notice.

© 2016 Mitsubishi Electric US, Inc.

DIMENSIONS: MSZ-GL06NA-U1

MSZ-GL06NA-U1

Unit: in. (mm)

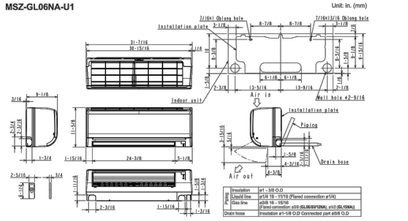

Insulation	ø1 - 3/8 O.D	
Liquid line	ø1/4 TS - TS110 (Flared connection ø1/4)	
Gas line	ø3/8 16 - 19/16	
	(Flared connection ø3/8 (GL09/12/15NA), ø1/2 (GL18NA))	
Drain hose	Insulation ø1-1/8 O.D Connected port ø5/8 O.D	

MITSUBISHI ELECTRIC
COOLING & HEATING

1340 Satellite Boulevard. Suwanee, GA 30024
Toll Free: 800-433-4822 www.mehvac.com

FORM# MSZ-GL06NA-U1 FOR MXZ-C MULTI-ZONE SYSTEMS - 201602

Specifications are subject to change without notice.

© 2016 Mitsubishi Electric US, Inc.

M-SERIES — SUBMITTAL DATA: MSZ-GL09NA-U1

9,000 BTU/H WALL-MOUNTED INDOOR UNIT FOR MXZ-C MULTI-ZONE HEAT-PUMP SYSTEMS

MITSUBISHI ELECTRIC

Job Name:

System Reference: Date:

Indoor Unit: MSZ-GL09NA-U1

Wireless Remote Controller

SPECIFICATIONS:

Rated Capacity*		
Cooling[1]	Btuh / W	9,000
Heating at 47º F[2]	Btuh / W	10,900

Rating Conditions per AHRI Standard:
[1] Cooling | Indoor: 80º F/27º C/DB / 67º F/19º C/WB; Outdoor: 95º F/35º C/DB / 75º F/24º C/WB
[2] Heating at 47ºF | Indoor: 70º F/ 21º C/DB / 60º F /16º C/WB; Outdoor: 47º F/ 8º C/DB / 43º F /6º C/WB

For data on specific indoor units (all ducted, all non-ducted, and both ducted and non-ducted) combinations, see the MXZ Technical and Service Manual.

Applications should be restricted to comfort cooling only; equipment cooling applications are not recommended for low ambient temperature conditions.

Electrical Power Requirements		208 / 230V, 1-Phase, 60 Hz
Minimum Circuit Ampacity (MCA)	A	1.0
Blower Motor (ECM)	FLA.	0.76
Blower Motor Output	W	30
Field Drainpipe Size O.D.	In.(mm)	5/8 (15)

Airflow Rate (Quiet - Lo - Med - Hi - Super Hi)			
Cooling	DRY	CFM	145-170-237-321-399
	WET		109-134-201-286-364
Heating	DRY		145-170-237-321-406

Sound Pressure Level (Quiet - Lo - Med - Hi - Super Hi)		
Cooling	dB(A)	19-22-30-37-43
Heating		19-22-30-37-43

External Dimensions (H x W x D)	In.(mm)	11-5/8 x 31-7/16 x 9-1/8 (295 x 798 x 232)
Net Weight	Lbs.(kg)	29 (12)
External Finish		Munsell 1.0Y 9.2 / 0.2

Refrigerant Piping (Flared)		
Liquid (High Pressure)	In.(mm)	1/4 (6.35)
Gas (Low Pressure)		3/8 (9.52)

ACCESSORIES:

Indoor Unit
- Condensate Pump (BlueDiamond X87-711/721; 115/230V)
- Condensate Pump (Sauermann SI30-115/230; 115/230V)
- Anti-Allergy Enzyme Filter (MAC-408FT-E)
- Platinum Catalyst Deodorizing Filter (MAC-309FT-E)
- Drain Pan Level Sensor (DPLS2)

Controls
- Wireless Controller (MHK1)
- Wired Remote Controller PAR-31MAA (Requires MAC-333IF-E)
- Wireless Interface for kumo cloud™ (PAC-WHS01WF-E)
- Thermostat Interface (PAC-US644CN-1)

Specifications are subject to change without notice.

© 2016 Mitsubishi Electric US, Inc.

DIMENSIONS: MSZ-GL09NA-U1

MSZ-GL09NA-U1

Unit: in. (mm)

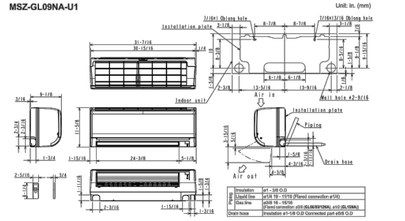

Insulation	ø1 - 3/8 O.D	
Liquid line	ø1/4 TS - TS110 (Flared connection ø1/4)	
Gas line	ø3/8 16 - 19/16	
	(Flared connection ø3/8 (GL09/12/15NA), ø1/2 (GL18NA))	
Drain hose	Insulation ø1-1/8 O.D Connected port ø5/8 O.D	

MITSUBISHI ELECTRIC
COOLING & HEATING

1340 Satellite Boulevard. Suwanee, GA 30024
Toll Free: 800-433-4822 www.mehvac.com

FORM# MSZ-GL09NA-U1 FOR MXZ-C MULTI-ZONE SYSTEMS - 201602

Specifications are subject to change without notice.

© 2016 Mitsubishi Electric US, Inc.

M-SERIES — SUBMITTAL DATA: MSZ-GL09NA-U1 & MUZ-GL09NA-U8

9,000 BTU/H WALL-MOUNTED HEAT PUMP SYSTEM

MITSUBISHI ELECTRIC

Job Name:

System Reference: Date:

Indoor Unit: MSZ-GL09NA-U1

Wireless Remote Controller

Outdoor Unit: MUZ-GL09NA-U8

ACCESSORIES:

Indoor Unit
- Condensate Pump (BlueDiamond X87-711/721; 115/230V)
- Condensate Pump (Sauermann SI30-115/230; 115/230V)
- Anti-Allergy Enzyme Filter (MAC-408FT-E)
- Drain Pan Level Sensor (DPLS2)

Outdoor Unit
- Outdoor Mounting Pad (ULTRLITE1)
- Drain Pan Heater (MAC-640BH-U)
- 3-1/4" Mounting Base (Pair) (CSD-400P)
- Drain Pan Socket (MAC-660DS)
- Air Outlet Guide (MAC-888SG)
- Wall Mounting Bracket (GSWB0000M4-1)

Controls
- Wireless Controller (MHK1)
- Wired Remote Controller PAR-31MAA (Requires MAC-333IF-E)
- Wireless Interface for kumo cloud™ (PAC-WHS01WF-E)
- Thermostat Interface (PAC-US644CN-1)

SPECIFICATIONS:

Rated Conditions (Capacity / Input)		
Cooling[1]	Btuh / W	9,000 / 585
Heating at 47º F[2]	Btuh / W	10,900 / 720

Capacity Range		Minimum	Maximum
Cooling[1]	Btuh	3,600	12,200
Heating at 47º F[2]	Btuh	4,500	14,100
Heating at 17º F[3]	Btuh	-	9,400
Heating at 5º F[4]	Btuh	-	7,600

[1] Cooling | Indoor: 80º F/27º C/DB / 67º F/19º C/WB; Outdoor: 95º F/35º C/DB / 75º F/24º C/WB
[2] Heating at 47ºF | Indoor: 70º F/ 21º C/DB / 60º F /16º C/WB; Outdoor: 47º F/ 8º C/DB / 43º F /6º C/WB
[3] Heating at 17º F | Indoor: 70º F/ 21º C/DB / 60º F /16º C/WB; Outdoor: 17º F/ 0º C/DB / 15º F/ -9º C/WB
[4] Heating at 5º F | Indoor: 70º F/ 21º C/DB / 60º F /16º C/WB; Outdoor: 5º F/ -15º C/DB / 0º F/ -18º C/WB
* Rating Conditions per AHRI Standard.

Operating Conditions (Indoor Intake Air Temp.) (Max. / Min.)	
Cooling[1]	90º F (32º C) DB / 67º F (19º C) DB
Heating	80º F (27º C) DB / 70º F (21º C) DB

Operating Conditions (Outdoor Intake Air Temp.) (Max./Min.)	
Cooling[1]	115 º F (46º C) DB / 14º F (-10º C) DB
Heating	75º F (24º C) DB / -4º F (-20º C) DB*

* Applications should be restricted to comfort cooling only; equipment cooling applications are not recommended for low ambient temperature conditions.
** System cuts out at -9º F (-23º C) to avoid thermistor error and automatically restarts at -4º F (-20º C).

AHRI Efficiency Ratings	
SEER / HSPF	24.0 / 12.8
COP at 47º F / 17º F	4.44 / 3.3
Energy Star®	Yes

ENERGY STAR products are third-party certified by an EPA-recognized Certification Body.

Electrical Power Requirements		208 / 230V, 1-Phase, 60 Hz
Minimum Circuit Ampacity (MCA)		
Indoor / Outdoor	A	1 / 9

Indoor Unit		
Blower Motor (ECM)	FLA.	0.76
Blower Motor Output	W	30
BHF / Moisture Removal		0.820 / 1.5 pt./h
Field Drainpipe Size O.D.	In.(mm)	5/8 (15)

Outdoor Unit		
Compressor		DC INVERTER-driven Twin Rotary
Fan Motor (ECM)	FLA.	0.76

Airflow Rate (Quiet - Lo - Med - Hi - Super Hi)			
Indoor (Cooling)	DRY	CFM	145-170-237-321-399
	WET		109-134-201-286-364
Indoor (Heating)	DRY		145-170-237-321-406
Outdoor			1,229 / 1,172

Sound Pressure Level (Quiet - Lo - Med - Hi - Super Hi)		
Indoor	Cooling	19-22-30-37-43
	Heating	19-22-30-37-43
Outdoor	Cooling	48
	Heating	50

External Dimensions		
Indoor (H x W x D)	In.(mm)	11-5/8 x 31-7/16 x 9-1/8 (295 x 798 x 232)
Outdoor (H x W x D)		21-5/8 x 31-1/2 x 11-1/4 (550 x 800 x 285)

Net Weight		
Indoor	Lbs.(kg)	22 (10)
Outdoor		81 (37)

External Finish	
Indoor	Munsell 1.0Y 9.2 / 0.2
Outdoor	Munsell No. 3Y 7.8 / 1.1

Refrigerant	R410A; 2 lb. 9 oz.

Refrigerant Piping (Flared)		
Liquid (High Pressure)	In.(mm)	1/4 (6.35)
Gas (Low Pressure)		3/8 (9.52)
Max. Total Refrigerant Pipe Length (Height Diff.)	Ft. (m)	40 (12)
Max. Total Refrigerant Pipe Length (Length.)		65 (20)

Specifications are subject to change without notice.

© 2016 Mitsubishi Electric US, Inc.

DIMENSIONS: MSZ-GL09NA-U1 & MUZ-GL09NA-U8

MSZ-GL09NA-U1

Unit: in. (mm)

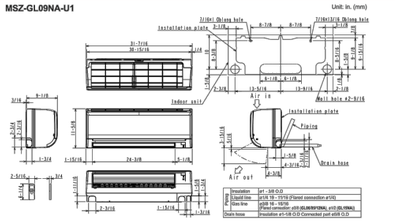

Insulation	ø1 - 3/8 O.D	
Liquid line	ø1/4 TS - TS110 (Flared connection ø1/4)	
Gas line	ø3/8 16 - 19/16	
	(Flared connection ø3/8 (GL09/12/15NA), ø1/2 (GL18NA))	
Drain hose	Insulation ø1-1/8 O.D Connected port ø5/8 O.D	

MUZ-GL09NA-U8

REQUIRED SPACE

Unit: in. (mm)

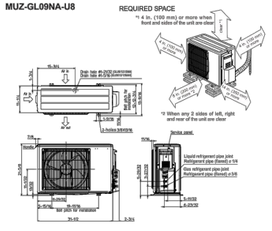
*1 4 in. (100 mm) or more when front and sides of the unit are clear
*2 When any 2 sides of left, right and rear of the unit are clear
15-3/4
Drain hole ø0.39 (Quantity:two)
Drain hole ø0.47 (Quantity:two)
11-13/16
3-15/16
3-15/16
11-13/16
L-Notch 3/4X1/16
Service panel
Liquid refrigerant pipe joint Refrigerant pipe (flared) ø 1/4
Gas refrigerant pipe joint Refrigerant pipe (flared) ø 3/8
3-15/16
11-13/16
3-15/16
11-13/16
3-15/16
3-15/16
3-15

fantech®
a systemair company

1SDE30DB STD DUTY EXH WALL FAN

Item no. K45531

Document type: **Product card**
Document date: **2017-01-30**
Generated by: **Systemair Online Catalogue**

Description

- Vertical/horizontal mounting options
- Adjustable motor mount and variable motor sheave permits easy RPM/CFM adjustment
- Rolled venturi for maximum air performance
- Final assembly is on-site (motor and drive pack shipped loose)
- See the motor

Standard duty belt drive exhaust wall fans are designed to move large volumes of air quickly at relatively low static pressures. They are ideal for light to medium duty applications such as warehouses, factories, parking garages, greenhouses, barns, mechanical rooms, gymnasiums, laundries and boiler rooms.

Technical parameters

Nominal data		
Voltage	115/230	V
Phase	1	~
Frequency	60	Hz
Input power (P1)	496	W
Current	8.4/4.2	A
Max. airflow	9069	cfm
Fan impeller speed	585	r.p.m.
Weight	0	lbs.

Temperature data		
Max. temperature of transported air	104	°F

Default group		
Nominal power at shaft (P2)	373	W
Motor type	1/2 HP	

Performance

Diagrams

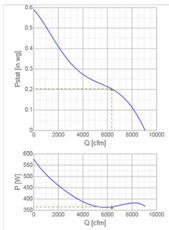

Hydraulic data

	Working point						
	Q [cfm]	Ps [in.wg]	P [W]	n [r.p.m.]	I [A]	SFP [W/cfm]	U [V]
Max. efficiency	6348	0.203	365	585	0	0.258	0

Acoustic data

Sound power level	63	125	250	500	1k	2k	4k	8k	Tot
Inlet dB(A)	-	-	-	-	-	-	-	-	-

Loudness

Dimensions

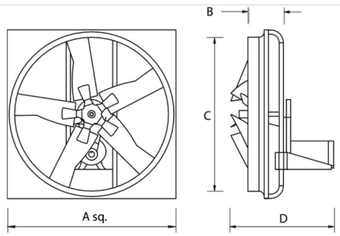

Model	A	B	C	D	Shaft Dia
1SDE 24	28 (711)	7 1/8 (181)	24 3/8 (619)	23 1/4 (591)	7/8 (22)
1SDE 30	34 (864)	8 3/4 (222)	30 1/2 (775)	24 1/4 (616)	7/8 (22)
1SDE 36	40 (1016)	8 7/16 (214)	36 1/2 (927)	26 1/4 (667)	7/8 (22)
1SDE 42	46 (1168)	9 1/16 (230)	42 3/4 (1086)	29 1/4 (743)	7/8 (22)
1SDE 48	54 (1372)	9 3/4 (248)	48 3/4 (1238)	32 1/8 (816)	7/8 (22)

Dimensions in inches (mm)

Wiring

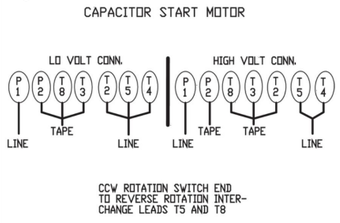

Accessories

Electric accessories

- SACC 01MS Motor Disc. Switch (47182)

Accessories

- 1ACC30WD Wall Damper (47019)
- 1ACC30MD Motorized Damper (47016)
- 1ACC30WH Weatherhood (47020)
- 1ACC30SG Intake Guard (47017)
- 1ACC30WC Wall Collar (47018)

Documentation

- 483378 1SDE CIPM EN.pdf (830,41kB)
- k45531.daf (1,26kB)
- 1SDE30DX.dwg (174,75kB)

01 CUT SHEETS - MECHANICAL

Sheet File Name: County-TX-Jefferson\BPT\Hanger\Draw\PLOT-FINAL-02-M0204.dwg

NO	LOC	DESCRIPTION OF REVISION	BY DATE	APPR DATE
4				
3				
2				
1				
0		Issued for Construction	WAE 08/23/17	

WORK ORDER NO.

Jefferson County Sheriff's Department

CONSTRUCTION DOCUMENTS
FACILITY CONSTRUCTION
Southeast Texas Regional Airport
Jefferson County, Texas

DRAWN: | SCALE: | DATE: Aug 23, 2017
APPROVED: | CHECKED: | NO. M2.04 | REV 0

WRS
White Rock Studio
1407 San Saba Drive
Dallas, Texas 75218
Office: 214.763.0416
Constructability by Design

LJA Engineering, Inc.
2929 Briarpark Drive Phone 713.953.5200
Suite 600 Fax 713.953.5026
Houston, Texas 77042 FRN - F-1386
White Rock Studio (BR 2642) Project Number 221

ISO PAGE
PAGE XX

DOCUMENTS REDUCED TO 50% OF ORIGINALLY INTENDED PLOT SCALE

The above drawings and specifications, and ideas, designs and arrangements represented thereby are and shall remain the property of the architect/engineers and no part thereof shall be copied, disclosed to others or used in connection with any other work or project other than the specific project for which they have been prepared and developed, without the written consent of the architect/engineers. Visual contact with these drawings and/or specifications shall constitute conclusive evidence of acceptance of these restrictions.

samp_sc0005.dwg

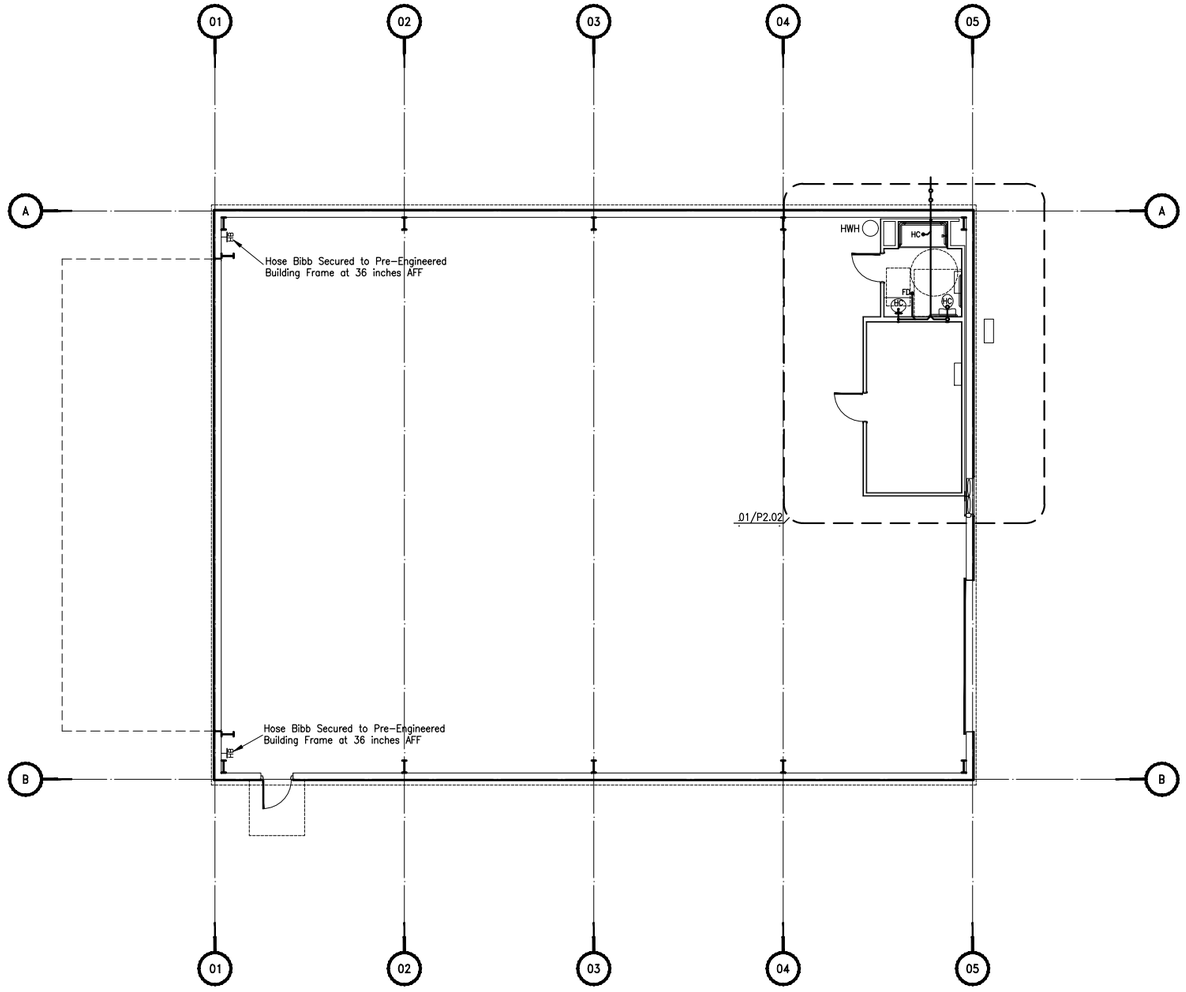

01 FLOOR PLAN - PLUMBING

Sheet File Name: County-TX-Jefferson\BPT\Hanger\Draw\PLOT-FINAL-02-P0201.dwg

Full Size Scale: 1/8" = 1'-0" Half Size Scale: 1/16" = 1'-0"

REGISTERED ARCHITECT — JOHN W. ANDERSON — STATE OF TEXAS — 22983 — Expires 04-30-2018

NO	LOC	DESCRIPTION OF REVISION	BY DATE	APPR DATE
4				
3				
2				
1				
0		Issued for Construction	WAE 08/23/17	

WORK ORDER NO.

Jefferson County Sheriff's Department

CONSTRUCTION DOCUMENTS
FACILITY CONSTRUCTION
Southeast Texas Regional Airport
Jefferson County, Texas

DRAWN: SCALE: DATE: Aug 23, 2017
APPROVED: CHECKED: NO. P2.01 REV 0

ISO PAGE
PAGE XX

WRS
White Rock Studio
1407 San Saba Drive
Dallas, Texas 75218
Office: 214.763.0416
Constructability by Design

LJA Engineering, Inc.
2929 Briarpark Drive
Suite 600
Houston, Texas 77042
White Rock Studio (BR 2642) Project Number 221
Phone 713.953.5200
Fax 713.953.5026
FRN - F-1386

DOCUMENTS REDUCED TO 50% OF ORIGINALLY INTENDED PLOT SCALE

The above drawings and specifications, and ideas, designs and arrangements represented thereby are and shall remain the property of the architect/engineers and no part thereof shall be copied, disclosed to others or used in connection with any other work or project other than the specific project for which they have been prepared and developed, without the written consent of the architect/engineers. Visual contact with these drawings and/or specifications shall constitute conclusive evidence of acceptance of these restrictions.

samp_sc0005.dwg

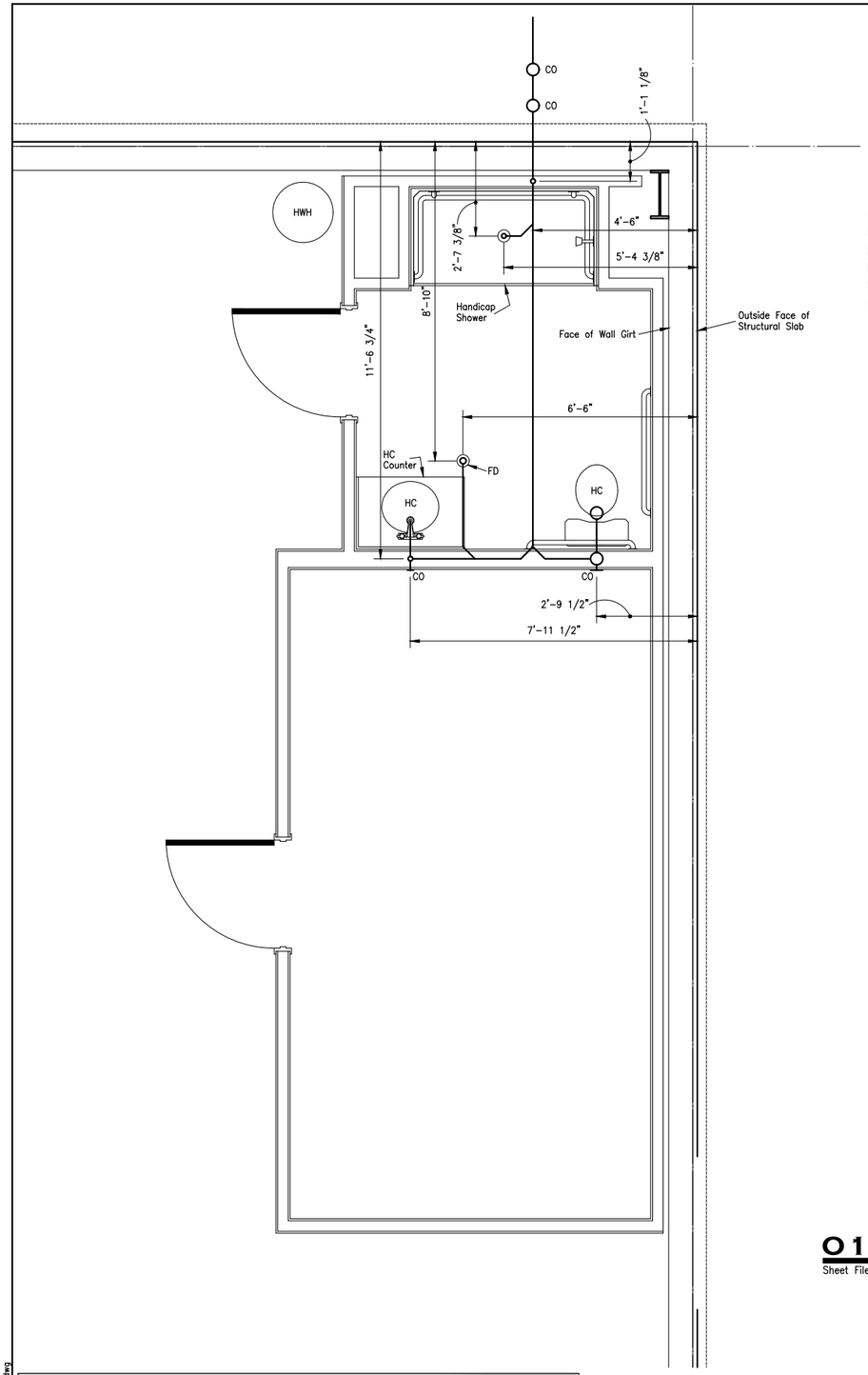

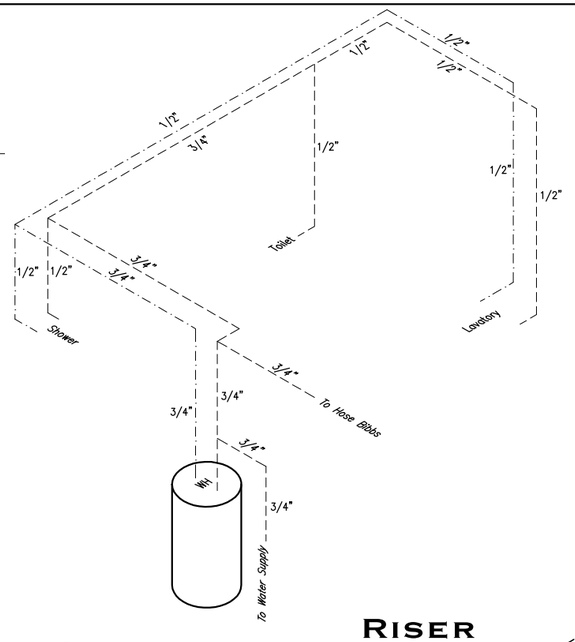

03 Riser Diagram - Water

Full Size Scale: NTS Half Size Scale: NTS

Equipment Selections

Fixture	Manufacturer	Model Number	Color	Capacity	Notes
Shower	Fiberglass Systems, Inc.	6333ADA.75	White	.	.
Shower Control Valve	.	.	.	.	.
Toilet	American Standard	2467.100	White	1.6 GPF	Control Valve to be on Open Side of Tank
Toilet Seat	Church	9500SSC	White	.	.
Lavatory	American Standard	0475047.020	White	.	.
Lavatory Control Valve	American Standard	7075000.002	.	.	.
Water Heater	A.O. Smith	DEL-20	.	20 Gallon	.
Floor Drain	Josam	30000-A	.	.	C.I. Drain with Satin Nikaloy Strainer, C.I. Flashing Collar and Trap Primer Connection
Trap Primer	Precision Plumbing Products	P2-500	.	.	All Brass with Distribution Unit. Provide trap primer on all Floor Drain and Shower Drain.
Wall Cleanout	Josam	Series 58910	.	.	Coated C.I. Cleanout Tee with Recessed Tapped Plug and Polished Stainless Steel Cover.
.	.	.	.	.	.

Plumbing Notes

1. Plumbing Materials and Installation of Components shall comply with all Federal, State and Local Laws and Regulations having jurisdiction over installation.
2. Plumbing Materials and Installation shall comply with the Americans with Disabilities Act and the Texas Accessibility Standards.
3. Verify Flow Line of Drain Elevation on Civil Documents prior to installation of drainage piping.
4. Dimensions shown are from the OUTSIDE face of the Structural Slab to the Centerline of Pipe Penetration through the Slab.
5. Piping layout is schematic in nature. Exact locations of piping to be coordinated with building structure and work of other contractors and trades.
6. General Contractor shall coordinate exact locations of all water and drain connections of Plumbing Fixturing with architectural wall layout.
7. All Hot and Cold Water Lines shall be insulated with Armaflex Insulation or other closed cellular foam product. Fiberglass insulation around cold water piping is not acceptable.
8. Support Cast Iron Sanitary Piping not in earth on 5'-0" centers, all steel piping on 10'-0" centers, all PVC piping on 8'-0" centers, and copper piping on 8'-0" centers.
9. Run all water lines level.
10. Maintain a minimum of 10'-0" clear between domestic water and sanitary sewer piping at buildng entrance.
11. All fixtures shall be equipped with stop valves in accessible locations.
12. Contractor shall provide shut-off valve at each branch line connecting to the main.
13. Main water shut-off shall be accessible.
14. Provide accessible cleanouts at not more than 50'-0" apart in horizontal sanitary drainage lines 4" size, or less, diameter, and not more than 100'-0" apart for larger pipe.
15. Provide accessible cleanouts as required by code.
16. Water Heater shall have both water and electrical shut-offs at easily accessible locations.
17. An atmospheric vacuum breaker or backflow prevention device must be installed on all hose bibbs inside and outside of this building.
18. Contractor is responsible for all new, existing, and upgraded utility services contractor shall contact local utility company (sewer, water, etc.) and coordinate new service sizes and meter.

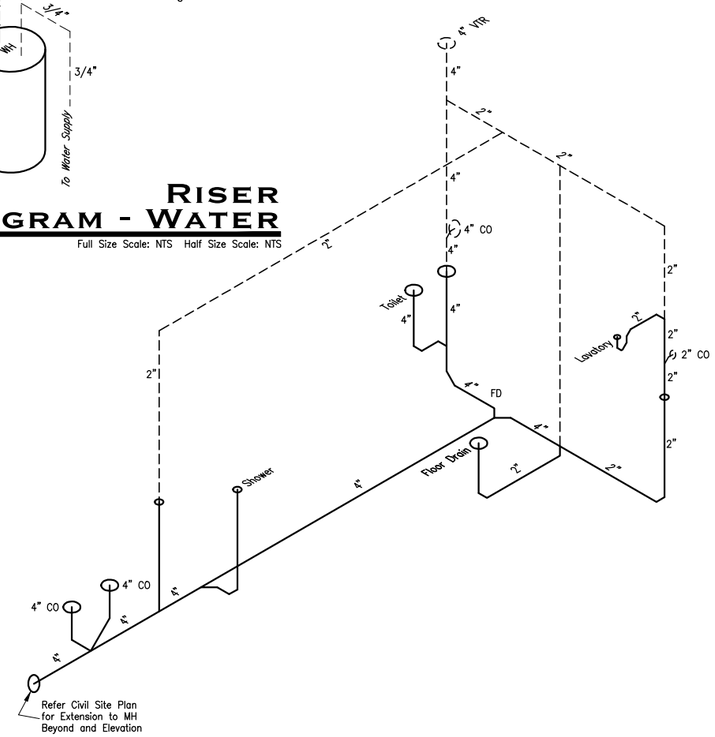

02 Riser Diagram - Sanitary

Full Size Scale: NTS Half Size Scale: NTS

01 Enlarged Floor Plan - Plumbing

Sheet File Name: County-TX-Jefferson\BPT\Hanger\Draw\PLOT-FINAL-02-P0202.dwg

Full Size Scale: 1/2" = 1'-0" Half Size Scale: 1/4" = 1'-0"

NO	LOC	DESCRIPTION OF REVISION	BY DATE	APPR DATE
4				
3				
2				
1				
0		Issued for Construction	WAE 08/23/17	

WORK ORDER NO.

Jefferson County Sheriff's Department

CONSTRUCTION DOCUMENTS
FACILITY CONSTRUCTION
Southeast Texas Regional Airport
Jefferson County, Texas

DRAWN: | SCALE: - | DATE: Aug 23, 2017

APPROVED: | CHECKED: | NO. P2.02 | REV 0

ISO PAGE

PAGE XX

WRS White Rock Studio
1407 San Saba Drive
Dallas, Texas 75218
Office: 214.763.0416
Constructability by Design

LJA Engineering, Inc.
2929 Briarpark Drive Phone 713.953.5200
Suite 600 Fax 713.953.5026
Houston, Texas 77042 FRN - F-1386
White Rock Studio (BR 2642) Project Number 221

DOCUMENTS REDUCED TO 50% OF ORIGINALLY INTENDED PLOT SCALE

The above drawings and specifications, and ideas, designs and arrangements represented thereby are and shall remain the property of the architect/engineers and no part thereof shall be copied, disclosed to others or used in connection with any other work or project other than the specific project for which they have been prepared and developed, without the written consent of the architect/engineers. Visual contact with these drawings and/or specifications shall constitute conclusive evidence of acceptance of these restrictions.

samp_sc0005.dwg

CONTRACT RENEWAL FOR IFB 14-032/JW
TERM CONTRACT FOR PAPER STOCK & ENVELOPES FOR JEFFERSON COUNTY

The County entered into a contract with Bosworth Papers, Inc. for one (1) year, from September 8, 2014 to September 7, 2015, with an option to renew the contract for up to a five (5) year period.

Pursuant to the contract, Jefferson County hereby exercises its third one-year option to renew the contract for one (1) additional year from September 5, 2017 to September 4, 2018.

ATTEST:

Carolyn L. Guidry, County Clerk

JEFFERSON COUNTY, TEXAS

Jeff Branick, County Judge

COMMISSIONERS COURT
JEFFERSON COUNTY, TEXAS

CONTRACTOR:
Bosworth Papers, Inc.

(Name)

CONTRACT RENEWAL FOR IFB 14-032/JW
TERM CONTRACT FOR PAPER STOCK & ENVELOPES FOR JEFFERSON COUNTY

The County entered into a contract with Olmsted Kirk Paper Co. for one (1) year, from September 8, 2014 to September 7, 2015, with an option to renew the contract for up to a five (5) year period.

Pursuant to the contract, Jefferson County hereby exercises its third one-year option to renew the contract for one (1) additional year from September 5, 2017 to September 4, 2018.

ATTEST:

Carolyn L. Guidry, County Clerk

COMMISSIONERS COURT JEFFERSON COUNTY, TEXAS

JEFFERSON COUNTY, TEXAS

Jeff Branick, County Judge

CONTRACTOR:
Olmsted Kirk Paper Co.

(Name)
Alan Proctor

CONTRACT RENEWAL FOR IFB 14-033/JW
RE-BID TERM CONTRACT FOR ROAD BUILDING MATERIALS
FOR JEFFERSON COUNTY

The County entered into a contract with Gulf Coast an Old Castle Company for one (1) year, from September 8, 2014 to September 7, 2015, with an option to renew the contract for up to a five (5) year period.

Pursuant to the contract, Jefferson County hereby exercises its third one-year option to renew the contract for one (1) additional year from September 5, 2017 to September 4, 2018.

ATTEST:

Carolyn L. Guidry, County Clerk

JEFFERSON COUNTY, TEXAS

Jeff Branick, County Judge

COMMISSIONERS COURT
JEFFERSON COUNTY, TEXAS

CONTRACTOR:
Gulf Coast an Old Castle Company

(Name)

CONTRACT RENEWAL FOR IFB 14-033/JW
RE-BID TERM CONTRACT FOR ROAD BUILDING MATERIALS FOR JEFFERSON COUNTY

The County entered into a contract with Martin Marietta Materials for one (1) year, from September 8, 2014 to September 7, 2015, with an option to renew the contract for up to a five (5) year period.

Pursuant to the contract, Jefferson County hereby exercises its third one-year option to renew the contract for one (1) additional year from September 5, 2017 to September 4, 2018.

ATTEST:

Carolyn L. Guidry, County Clerk

JEFFERSON COUNTY, TEXAS

Jeff Branick, County Judge

COMMISSIONERS COURT JEFFERSON COUNTY, TEXAS

CONTRACTOR:
Martin Marietta Materials

(Name)

CONTRACT RENEWAL FOR IFB 14-033/JW
RE-BID TERM CONTRACT FOR ROAD BUILDING MATERIALS FOR JEFFERSON COUNTY

The County entered into a contract with Vulcan Construction Materials, LP for one (1) year, from September 8, 2014 to September 7, 2015, with an option to renew the contract for up to a five (5) year period.

Pursuant to the contract, Jefferson County hereby exercises its third one-year option to renew the contract for one (1) additional year from September 5, 2017 to September 4, 2018.

ATTEST:

Carolyn L. Guidry, County Clerk

JEFFERSON COUNTY, TEXAS

Jeff Branick, County Judge

COMMISSIONERS COURT JEFFERSON COUNTY, TEXAS

CONTRACTOR:
Vulcan Construction Materials, LP

(Name)

URETEK GULF COAST
11603 Windfern Road Houston,TX 77064
T: 281.894.4990 F: 281.720.1222
uretek-gulfcoast.com

August 21, 2017

Jefferson County
Attn: Mr. Steve Stafford, P.E.
1149 Pearl Street, 5th Floor
Beaumont, TX 77701

RE: Lift & Stabilize Concrete at 820 Neches Street, Beaumont, TX 77701

Mr. Stafford,
Thank you for the opportunity to present this proposal to you. Please let me know if you have any questions or concerns.

ANALYSIS OF WORK:
The concrete at the bottom of the rear elevator well has settled up to 2.5" which is affecting the function of the elevator.

SCOPE OF WORK:
URETEK will tunnel access to underneath the four corners of the well floor and install 4 pressed pilings to stabilized and lift the concrete.

PRICING:
URETEK will furnish the material, tools, skilled technicians, and insurance necessary to perform the work as described above at the cost below (plus applicable taxes) which includes a 10-year warranty:

Lift Elevator Well Floor: $10,000.00

Sincerely,

Jonathan Friedmann

Jonathan Friedmann
(713) 702-0969
JonathanF@uretek-gulfcoast.com

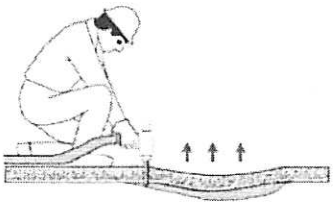

Industrial | Commercial | Residential
Concrete Lifting, Soil Stabilization, Void Fill, I & I Repair

Uretek ICR Gulf Coast
11603 Windfern Houston, TX 77064
Toll Free: 1.866.873.5438 Phone: 281.894.4990 Fax: 281.720.1222

Sales Contract

Submitted To: Jefferson County
Attn: Steve Stafford, PE
1295 Pearl Street
Beaumont, TX 77701

Date: 8/21/2017
Uretek ICR Representative: Jonathan Friedmann
Job Address: 820 Neches St
Beaumont, TX 77701

Uretek ICR Gulf Coast ("Uretek ICR") and the individuals or entities designated as Owner(s)/Authorized Agent(s) below (collectively, the "Owner") enter into this agreement (the "Agreement") and hereby agree as follows:

1. Uretek ICR will provide all labor, materials and supervision to fill subterranean-voids using the Uretek Method™ to raise and/or stabilize the slab foundation at injection locations on the Project.

2. Injections will be made by drilling holes. The holes resulting from the drilling will be sealed with either wood putty or grout (as applicable) upon completion of the work.

3. Owner hereby accepts all responsibility for and agrees that Uretek ICR is not responsible for any damage to or resulting from damage to, (1) plumbing, (2) sheetrock, (3) wall covering, (4) carpet, (5) flooring, (6) door and/or window frames, (7) any other rigid material(s) and/or (8) any other damage resulting from Uretek ICR's work.

4. Any re-mobilization required because of lack of preparation by the customer will result in a $1,000.00 remobilization charge.

5. Uretek ICR will Install 4 press piles by access tunnels under well floor of elevator to lift and stabilize concrete pad for the sum of Ten Thousand dollars ($10,000.00), plus all applicable taxes (the "Service Fee"). Work beginning after 5pm on Friday thru 5am Monday will cost an additional $1,000.00. Changes to the work will not be undertaken without a written change order signed on behalf of Uretek ICR and by Owner. Payment in full of the Service Fee is due upon Uretek ICR's representation that the work is complete regardless of whether Owner requests additional work by executing a change order as provided below. All invoices which are not paid upon completion of the work shall bear interest on the amounts then due at the rate of twelve percent (12%) per year with interest to accrue five (5) days from the date of Uretek ICR's invoice.

   The Service Fee is based on Uretek ICR's investigation of the conditions and factors affecting the work to be performed, including, without limitation, soil conditions, void spaces, moisture levels, thickness of concrete and Owner's input to Uretek ICR regarding those and other pertinent conditions. If, after beginning work, the factors or conditions are found to be significantly different than previously understood by or explained to Uretek ICR, Uretek ICR reserves the right to stop work to determine the impact of such factors and conditions on the scope of work outlined above. If additional labor or materials are required beyond those contemplated by Uretek ICR as set forth above, Uretek ICR will provide Owner with a revised cost estimate to complete the work. In no event, will Uretek ICR be obligated to complete the work until the parties execute a change order as provided herein.

Regardless of whether Owner elects to execute a change order for additional labor and/or materials, Owner remains responsible for payment in full of the Service Fee.

6. This warranty applies only to initial installation and does not cover deterioration or damage resulting from improper use or modifications subsequent to installation, damage due to water or sewage infiltration, accidents or acts of God. If any adjustment is necessary due to settlement in the initial locations ten (10) years or less from the date of completion of the work, Uretek ICR's sole obligation is to adjust the settled area without cost to the Owner if Owner has paid in full all monies previously invoiced by Uretek ICR Gulf Coast. Warranty excludes all cost for removal and replacement of collateral structural or cosmetic components, including but not limited to floors, wall coverings, windows, decks, landscaping or tunneling required to access prior work. All cost of redecorating, repairing or replacing of any material or items, not specially incorporated in the product installation per the agreement is excluded. SUBJECT TO THIS LIMITED WARRANTY, OWNER AGREES THAT THERE ARE NO WARRANTIES, EXPRESS OR IMPLIED, MADE BY URETEK ICR CONCERNING THE LABOR OR MATERIALS PROVIDED UNDER THIS AGREEMENT. TO THE FULLEST EXTENT PERMITTED BY APPLICABLE LAW, URETEK ICR HEREBY DISCLAIMS, AND OWNER HEREBY WAIVES, ALL IMPLIED WARRANTIES RELATING TO THE LABOR AND MATERIALS PROVIDED UNDER THIS AGREEMENT INCLUDING, BUT NOT LIMITED TO, IMPLIED WARRANTIES OF MERCHANTABILITY, HABITABILITY, CONSTRUCTION IN A GOOD AND WORKMANLIKE MANNER, CONDITION, SUITABILITY, FITNESS FOR A PARTICULAR PURPOSE, AND ADEQUACY OF THE PLANS. ANY IMPLIED WARRANTIES WHICH CANNOT LAWFULLY BE DISCLAIMED ARE LIMITED IN DURATION TO ONE (1) YEAR DURATION FROM THE DATE OF URETEK ICR'S INITIAL-INJECTIONS. IN NO EVENT SHALL URETEK ICR BE LIABLE FOR DAMAGES IN EXCESS OF THE SERVICE FEE, FOR ANY LOSS OF USE, LOSS OF TIME, INCONVENIENCE, COMMERCIAL LOSS, LOST PROFITS OR SAVINGS OR OTHER INCIDENTIAL, SPECIAL, CONSEQUENTIAL OR PUNITIVE DAMAGES OR ATTORNEY'S FEES ARISING OUT OF OR IN ANY WAY RELATED TO THE LABOR OR MATERIALS PROVIDED HEREUNDER TO THE EXTENT PERMITTED BY LAW.

7. Any disputes arising out of or in any way related to this Agreement or Uretek ICR's work will be resolved by binding arbitration in Harris County, Texas, as administered by the American Arbitration Association ("AAA") in accordance with the AAA's Construction Industry Arbitration Rules using a one-arbitrator panel.

AGREED:
URELIFT GULF COAST, L. P.
dba URETEK ICR GULF COAST
By: UGC Management, LLC
Its: General Partner

Authorized Agent / Date

Customer Signature / Date

OTIS

United Technologies

OTIS HYDRAULIC CYLINDER REPLACEMENT

DATE: 08/04/2017

TO:
Jefferson County Auditors Office
1149 Pearl, 7th Floor
Beaumont, TX 77701

FROM:
Otis Elevator Company
8745 Eastex Frwy
Beaumont, TX 77708

PROJECT LOCATION:
Jeff Cty Annex IV
820 Neches
Beaumont, TX 77701

Bryan Hebert
Phone: (281) 541-3389
Fax: (860) 660-1502

PROPOSAL NUMBER: EZH170804141210

We propose to furnish the necessary material and labor to remove and replace the existing hydraulic cylinder on elevator number Z77307 based on the following:

New Cylinder with Sealed PVC Protection

The cylinder shall be of a double bottom design constructed of steel pipe of sufficient thickness and suitable for the operating pressure as prescribed by the latest revision of the ASME A17.1 or CAN3-B44 codes. The top of the cylinder shall be equipped with a new cylinder head with a drip ring to collect any oil seepage as well as an internal guide ring and self-adjusting packing. The cylinder exterior shall be covered with a protective coating. Sealed PVC Protection helps protect the cylinder from corrosion, permits monitoring and evacuation of liquids to make sure the cylinder does not come in contact with water, and helps contain oil should the cylinder leak. The sealed PVC Protection can help protect your property against possible environmental contamination and clean-up costs.

New Plunger

The plunger shall be constructed of selected steel tubing or pipe of proper diameter machined true and smooth with a fine polished finish. The plunger shall be provided with a stop ring electrically welded to it to prevent the plunger from leaving the cylinder.

Installation

The plunger and new cylinder shall be installed plumb and shall operate freely with minimum friction.

Pit Equipment, Pit Channel and Buffer Springs

New Pit channels and Buffer springs will be provided. The Pit channels will accommodate the new buffer springs and cylinder evacuation fittings. The Pit channels and springs shall comply with latest revision of ASME A17.1 and CSA/CAN-B44 codes.

Cylinder Head Support Removal - Otis

©Otis Elevator Company, 2013 All Rights Reserved LiNX Form 421CR (08/13) Proposal#: EZH170804141210

TCPN Contract # 384899

Otis will remove the existing cylinder-head support for cylinder replacement. After installation of the new cylinder and sealed PVC Protection System is complete, Otis will provide a new cylinder-head support.

Removal of Equipment and Hole Preparation

This proposal includes removing the existing cylinder from the original well hole. **Drilling work is not included in this proposal.** *If any physical obstruction, hindrance, ground water, or cave-in is encountered below the ground, we shall be provided with written authorization to proceed with the excavation utilizing any additional special hoisting or excavating equipment required.* Otis Elevator Company shall be reimbursed for all additional costs incurred subsequent to encountering the physical obstruction or hindrance, including the costs of the special equipment, and standby time as may be required by union agreement. Your initials constitute written authorization to proceed with vendors of our choice, who may bill you directly for their services. _____ (initials)

Removal of Excavation Spoils

All excavation spoils removed by Otis and its agents or (sub)contractors during the performance of this work will be placed in 55 gallon drums at the site. It shall remain the owner's responsibility to properly label and dispose of the excavation spoils and existing cylinders according to regulatory requirements.

Warranty

Otis cylinder and sealed PVC protection warranty is available for the initial term of your Otis full-coverage maintenance agreement, up to 20 years.

WORK NOT INCLUDED IN THE ELEVATOR CONTRACT

When needed, we will provide protection for floors, walls and elevator entrances for normal activities associated with this work. If special drilling or excavation of contaminant material equipment is required, the owner will be responsible for all building protection and alterations needed to bring this equipment in, use and take off of the premises.

To complete this installation, the following items must be performed or furnished by the owners or their agent according to governing codes. The price and installation schedule of the elevator contractor is based on the following conditions prevailing at the beginning and during installation of the elevator equipment and includes the following:

Provide electric power for light, tools, hoists, welding, drilling rig (if necessary), etc. required for the duration of this project.

Owner will provide full access to the work area for the contractors works and their agents at all times during the agreed upon work hours for the duration of the project.

The owner will provide on site storage space adequate to store cylinder, PVC, oil, tools, etc. during the project. The storage space should be close proximity to the work area.

It shall remain the owner's responsibility that the well hole is free of contaminants and clear of any obstructions.

The owner will provide all necessary permits for welding, gas burning and cutting in the elevator hoistway.

The owner is responsible for deactivating and reactivating all fire, smoke and/or combustion sensors in the work area that may be activated by the effects of the operations required to complete this work.

The scope proposed herein represents the entire scope that we are contracted for, if additional work is required by others to allow for completion of this work and/or for the inspection to occur, that work is not included.

The price quoted below does not include sales tax and is valid for 30 days from the date specified above. Please add any applicable tax to the price quoted below.

The price quoted below assumes the work will be scheduled based on the availability of material and manpower to complete the job efficiently. A local representative will contact you to schedule the work.

AccessAlert Hoistway Safety Device - OPTIONAL

©Otis Elevator Company. 2013 All Rights Reserved LiNX Form 421CR (08/13) Proposal#: EZH170804141210

We are offering our new AccessAlert system in addition to the scope of work shown above. The AccessAlert system is a practical and industry-first safety enhancement that activates if the elevator has not been controlled properly. If you elect to have the AccessAlert system installed and it can be installed we will furnish and install all of the necessary components, circuitry, and wiring for an additional price of $1,950.00 per elevator covered by the above scope. If the AccessAlert system cannot be installed, you will not have to pay the $1,950.00 per elevator price for this safety enhancement.

If you want to add the AccessAlert system to this proposal please initial here: _____

Payment Terms

- The base proposal price is contingent upon receiving a down-payment of 50% of the base contract amount.
- If you choose one of the alternative down-payment amounts listed below, the corresponding Add/Discount shall be applied to the base contract amount:

Down Payment Amount	Price Adjustment Percentage	Authorization (Initial)
0%	10% Add	
100%	5% Discount	

- The down-payment amount is due in full prior to ordering material and/or mobilizing.
- Payment in full is due upon completion of the project.
- In the event a third party inspection agency is required to "inspect" the completed project prior to returning the equipment to normal operation payment in full is due prior to scheduling the final handover/turnover of the equipment.

©Otis Elevator Company, 2013 All Rights Reserved LiNX Form 421CR (08/13) Proposal#: EZH170804141210

PRICE: **$ 36,328.02**

Thirty-six thousand three hundred twenty-eight dollars and two cents

This price is based on a **fifty percent (50 %)** downpayment in the amount of **$ 18,164.01.**

This proposal, including the provisions printed on the pages following, shall be a binding contract between you, or the party identified below for whom you are authorized to contract (collectively referred to herein as "you"), and us when accepted by you through execution of this proposal by you and approved by our authorized representative; or by your authorizing us to perform work for the project and our commencing such work.

Submitted by: Brent Stark
Title: Mechanic

Accepted in Duplicate

CUSTOMER
Approved by Authorized Representative

Date: _____

Signed: _____

Print Name: - _____

Title - _____

E-mail: - _____

Name of Company - _____

Otis Elevator Company
Approved by Authorized Representative

Date: _____

Signed: _____

Print Name: Mandy Winter

Title General Manager

□ Principal, Owner or Authorized Representative of Principal or Owner

□ Agent: _____
(Name of Principal or Owner)

©Otis Elevator Company, 2013 All Rights Reserved LiNX Form 421CR (08/13) Proposal#: EZH170804141210

TERMS AND CONDITIONS

The work shall be performed for the agreed price plus any applicable Goods and Service Tax (GST), Harmonized Sales Tax (HST), sales, excise or similar taxes as required by law.

In addition to the agreed price, you shall pay to us any future applicable tax imposed on us, our suppliers or you in connection with the performance of the work described.

This quotation is subject to change or withdrawal by us prior to acceptance.

We warrant to you that the work performed by us hereunder shall be free from defects, and workmanship for one (1) year from the date of substantial completion. Our duty and your remedy under this warranty are limited to our correcting any such defect you report to us within the warranty period by, at our opinion, repair or replacement, provided all payments due under the terms of this contract have been made in full. All parts used for repair or replacement under this warranty shall be good quality and furnished on an exchange basis. Printed circuit boards used for replacement parts under this warranty may be refurbished boards. Exchanged parts become our property.

We shall perform the work during our regular working hours of our regular working days unless otherwise agreed in writing. You shall be responsible for providing suitable storage space at the site for our material.

You shall obtain title to all the equipment furnished hereunder when final payment for such material is received by us. In addition, you shall be granted a license to use any software incorporated into any such equipment solely for operating such equipment.

Any drawings, illustrations or descriptive matter furnished with the proposal are submitted only to show the general style, arrangement and dimensions of the equipment.

Payments shall be made as follows: A down payment of fifty percent (50 %) of the price shall be paid by you upon your signing of this document. Full payment shall be made on completion if the work is completed within a thirty day period. If the work is not completed within a 30-day period, monthly progress payments shall be made based on the value of any equipment ready or delivered, if any, and labor performed through the end of the month less a five percent (5%) retainage and the aggregate of previous payments. The retainage shall be paid when the work is completed. We reserve the right to discontinue work at any time until payments have been made as agreed and we have assurance satisfactory to us that subsequent payments will be made when due. Payments not received within thirty (30) days of the date of invoice shall be subject to interest accrued at the rate of eighteen percent (18%) per annum or at the maximum rate allowed by applicable law, whichever is less. We shall also be entitled to reimbursement from you of the expenses, including attorney's fees, incurred in collecting any overdue payments.

Our performance is conditioned upon your securing any required governmental approvals for the installation of any equipment provided hereunder and your providing our workmen with adequate electrical power at no cost to us with a safe place in which to work, and we reserve the right to discontinue our work in the building whenever, in our opinion, working conditions are unsafe. If overtime work is mutually agreed upon and performed, an additional charge thereof, at our usual rates for such work, shall be added to the contract price. The performance of our work hereunder is conditioned on your performing the preparatory work, providing any required government notifications, obtaining required permits, and supplying the necessary data specified on the front of this proposal or in the attached specification, if any. Should we be required to make an unscheduled return to your site to begin or complete the work due to your request, acts or omissions, then such return visits shall be subject to additional charges at our current labor rates.

We shall retain a security interest in all material furnished hereunder and not paid for in full. You agree that a copy of this Agreement may be used as a financing statement for the purpose of placing upon public record our interest in any material furnished hereunder, and you agree to execute a UCC-1 form or any other document reasonably requested by us for that purpose.

Except insofar as your equipment may be covered by an Otis maintenance or service contract, it is agreed that we will make no examination of your equipment other than that necessary to do the work described in this contract and assume no responsibility for any part of your equipment except that upon which work has been done under this contract.

Neither you nor we shall be liable to the other party hereto for any loss, damage or delay due to any cause beyond your or our reasonable control including, but not limited to, acts of government, strikes, lockouts, fire, explosion, theft, floods, riot, civil commotion, war, mischief, or act of God; provided, however, that, should loss of or damage to our material or work occur at the site, you shall compensate us unless such loss or damage results from our acts or omissions.

We do not agree under our warranty to bear the cost of repairs or replacements due to vandalism, abuse, misuse, neglect, normal wear and tear, modifications not performed by us, improper or insufficient maintenance by others, or any cause beyond our control.

We shall conduct, at our own expense, the entire defense of any claim, suit or action alleging that, without further combination, the use by you of any equipment provided hereunder directly infringes any patent, but only on the conditions that (a) we receive prompt written notice of such claim, suit or action and full opportunity to assume the sole defense thereof, including settlement and appeals, and all information available to you for such defense; (b) said equipment is made according to a specification or design furnished by us; and (c) the claim, suit or action is brought against you. Provided all of the foregoing conditions have been met, we shall, at our own expense, either settle said claim, suit or action or shall pay all damages excluding consequential damages and costs awarded by the court therein and, if the use or resale of such equipment is finally enjoined, we shall, at our option, (i) procure for you the right use of the equipment, (ii) replace the equipment with equivalent non-infringing equipment, (iii) modify the equipment so it becomes non-infringing but equivalent, or (iv) remove the equipment and refund the purchase price (if any) less a reasonable allowance for use, damage or obsolescence.

The express warranties set forth in this agreement are the exclusive warranties given: we make no other warranties express or implied, and specifically make no warranty of merchantability or of fitness for any particular purpose; and the express warranties set forth in this agreement are in lieu of any such warranties and any other obligation or liability on our part.

Under no circumstances shall we be liable for any special, indirect or consequential damages of any kind including, but not limited to, loss of profit, loss of good will, loss of business opportunity, additional financing costs, or loss of use of any equipment or property, whether in contract, in tort, in warranty or otherwise, not withstanding any provision to the contrary.

Your remedies set forth herein are exclusive and our liability with respect to any contract, or anything done in connection therewith such as performance or breach thereof, or from the manufacture, sale, delivery, installation, repair or use of any equipment furnished under this contract, whether in contract, in tort, in warranty or otherwise, shall not exceed the price for the equipment or services rendered.

It is agreed that after completion of our work, you shall be responsible for ensuring that the operation of any equipment furnished hereunder is periodically inspected. The interval between such inspections shall not be longer than what may be required by the applicable governing safety code.

By accepting delivery of parts incorporating software, you agree that the transaction is not a sale of such software but merely a license to use such software solely for operating the unit(s) for which the part was provided, not to copy or let others copy such software for any purpose whatsoever, to keep such software in confidence as a trade secret, and not to transfer possession of such part to others except as a part of a transfer of ownership of the equipment in which such part is installed, provided that you inform us in writing about such ownership transfer and the transferee agrees in writing to abide by the above license terms prior to any such transfer.

Our work shall not include the identification, detection, abatement, encapsulation or removal of asbestos, polychlorinated biphenyl (PCB), or products or materials containing asbestos, PCBs , oil, or any hazardous substances in soil, water or elsewhere. In the event we encounter any such product or materials in the course of performing work, we shall have the right to discontinue our work and remove our employees from the project until you have taken the appropriate action to abate, encapsulate or remove such products or materials, and any hazards connected therewith, or until it is determined that no hazard exists (as the case may require). We shall receive an extension of time to complete the work hereunder and compensation for delays encountered as a result of such situation.

The disposal of the cylinders, underground piping, and any and all related materials shall be the sole responsibility of the Owner. Additionally, the Owner is solely responsible for the removal and/or disposal of oil, contaminated soil, water and or other by-products. In the event that any contaminated soil or groundwater is discovered during the performance of the work, Otis will notify the Owner in writing. During the time the Owner is performing any such removal or disposal, Otis is excused from its performance under this Agreement, and Owner will compensate Otis for any and all costs attributable to any such delay. Furthermore, Owner will indemnify and hold harmless Otis from any cost, liability or expense imposed upon, or incurred by, Otis under any state, provincial, federal or other law because of or arising out of any contamination, alleged contamination of the property (including reporting requirements with regard to same, if applicable), or removal or disposal of oil, contaminated soil or water or otherwise.

In furtherance of OSHA's directive contained in 29 C.F.R. § 1910.147(f)(2)(i), which requires that a service provider (an "outside employer") and its customer (an "on-site" employer) must inform each other of their respective lock out/tag out ("LOTO") procedures whenever outside servicing personnel are to be engaged in control of hazardous energy activities on the customer's site, Otis incorporates by reference its mechanical LOTO procedures and its electrical LOTO procedures. These procedures can be obtained at [illegible] by (1) clicking on "The Americas" tab on the left side of the website; (2) choosing "US/English" to take you to the "USA" webpage; (3) clicking on the "Otis Safety" link on the left side of the page; and (4) downloading the "Lockout Tagout Policy Otis 6.0" and "Mechanical Energy Policy Otis 7.0," both of which are in .pdf format on the right side of the website page. Customer agrees that it will disseminate these procedures throughout its organization to the appropriate personnel who may interact with Otis personnel while Otis personnel are working on site at Customer's facility.

This Agreement constitutes the entire understanding between the parties regarding the subject matter hereof and may not be modified by any terms on your order form or any other document, and supersedes any prior written or oral communication relating to the same subject. Any amendment or modifications to this Agreement shall not be binding upon either party unless agreed to in writing by an authorized representative of each party. Both parties agree that any form issued by you that contains any terms that are inconsistent with those contained herein shall not modify this Agreement, nor shall it constitute an acceptance of any additional terms.**TE**

©Otis Elevator Company, 2013 All Rights Reserved LiNX Form 421CR (08/13) Proposal#: EZH170804141210

JEFFERSON COUNTY PURCHASING DEPARTMENT

Deborah Clark, Purchasing Agent

1149 Pearl Street, Beaumont, TX 77701 Phone: 409-835-8593 Fax: 409-835-8456

MEMORANDUM

To: Commissioners' Court

From: Deborah Clark
Purchasing Agent

Date: August 23, 2017

Re: Disposal of Salvage Property

Consider and possibly approve disposition of salvage property as authorized by Local Government Code §263.152 (3), for broken or obsolete items.

Thank you.

JEFFERSON COUNTY, TEXAS
1149 PEARL STREET
BEAUMONT, TX 77701

DISPOSAL OF SALVAGE PROPERTY
August 28, 2017

DEPARTMENT	DESCRIPTION OF PROPERTY	SERIAL NO.	ASSET NO.
COUNTY CLERK	1 FULL SET OF VERNON'S STATUTES		
COUNTY CLERK	1 SET OF ULA UNIFORM COMMERCIAL CODE		
COUNTY CLERK	TEXAS ESTATE PLANNING 2013-2015 ed.		
COUNTY CLERK	MOFFETT'S TEXAS FORM BOOK 7th ed.		
COUNTY CLERK	STAYTON TEXAS FORM BOOK 3rd ed.		
COUNTY CLERK	(4) BOOK CASES		
COUNTY CLERK	(23) COMPUTER HOLDERS		
COUNTY CLERK	(1) LG. LEATHER CHAIR, (4) SMALL CHAIRS		
COUNTY CLERK	TAN METAL COMPUTER TABLE		
COUNTY CLERK	COMPUTER MONITOR, POWER CORDS, ETHERNET		
COUNTY CLERK	TAN METAL FILING CABINET		
COUNTY CLERK	ITHACA POSJET 1500 RECEIPT PRINTER	SJ004652716	
COUNTY CLERK	ITHACA POSJET 1500 RECEIPT PRINTER	SJ004241602	
COUNTY CLERK	ITHACA POSJET 1500 RECEIPT PRINTER	SJ004652722	
COUNTY CLERK	ITHACA POSJET 1500 RECEIPT PRINTER	SJ004652720	
COUNTY CLERK	ITHACA POSJET 1500 RECEIPT PRINTER	SJ004652726	
COUNTY CLERK	TLP 2844 LABEL PRINTER	41J083900055	
COUNTY CLERK	GRAY COMPUTER TABLE		
COUNTY CLERK	(2) TABLE TOPS		
COUNTY CLERK	SPACE HEATER		
COUNTY CLERK	HEAT LAMP		
contact person: Gabriela De Los Santos			

Approved by Commissioners' Court: _____

JEFFERSON COUNTY PURCHASING DEPARTMENT

Deborah Clark, Purchasing Agent

1149 Pearl Street, Beaumont, TX 77701 Phone: 409-835-8593 Fax: 409-835-8456

MEMORANDUM

To: Commissioners' Court

From: Deborah Clark
Purchasing Agent

Date: August 21, 2017

Re: Disposal of Scrap Property – Road & Bridge 3

Consider and possibly approve disposal of scrap metal property. Scrap property to be transported to a metal salvage company and there sold for such price as it may command and return funds to the County.

Thank you.

AGENDA ITEM **August 28, 2017**

Consider and possibly approve FY2018 TxDOT Routine Airport Maintenance Program (RAMP) Grant for the Jack Brooks Regional Airport. This grant will be used for the maintenance and improvement of airport pavements, signage, drainage, fencing, herbicides, hangars and terminal buildings. (This grant is a 50% match, up to $50,000)"

TEXAS DEPARTMENT OF TRANSPORTATION
GRANT FOR ROUTINE AIRPORT MAINTENANCE PROGRAM

(State Assisted Airport Routine Maintenance)

TxDOT Project ID.: M1820BMPT

Part I - Identification of the Project

TO: The County of Jefferson, Texas

FROM: The State of Texas, acting through the Texas Department of Transportation

This Grant is made between the Texas Department of Transportation, (hereinafter referred to as the "State"), on behalf of the State of Texas, and the County of Jefferson, Texas, (hereinafter referred to as the "Sponsor").

This Grant Agreement is entered into between the State and the Sponsor shown above, under the authority granted and in compliance with the provisions of the Transportation Code Chapter 21.

The project is for **airport maintenance** at the BEAUMONT/PORT ARTHUR - JACK BROOKS RGNL Airport.

Part II - Offer of Financial Assistance

1. For the purposes of this Grant, the annual routine maintenance project cost, Amount A, is estimated as found on Attachment A, Scope of Services, attached hereto and made a part of this grant agreement.

   State financial assistance granted will be used solely and exclusively for airport maintenance and other incidental items as approved by the State. Actual work to be performed under this agreement is found on Attachment A, Scope of Services. State finacial assistance, Amount B, will be for fifty percent (50%) of the eligible project costs for this project or $50,000.00, whichever is less, per fiscal year and subject to availability of state appropriations.

   Scope of Services, Attachment A, of this Grant, may be amended, subject to availability of state funds, to include additional approved airport maintenance work. Scope amendments require submittal of an Amended Scope of Services, Attachment A.

   Services will not be accomplished by the State until receipt of Sponsor's share of project costs.

Only work items as described in Attachment A, Scope of Services of this Grant are reimbursable under this grant.

Work shall be accomplished by August 31, 2018, unless otherwise approved by the State.

2. The State shall determine fair and eligible project costs for work scope. Sponsor's share of estimated project costs, Amount C, shall be as found on Attachment A and any amendments.

It is mutually understood and agreed that if, during the term of this agreement, the State determines that there is an overrun in the estimated annual routine maintenance costs, the State may increase the grant to cover the amount of the overrun within the above stated percentages and subject to the maximum amount of state funding.

The State will not authorize expenditures in excess of the dollar amounts identified in this Agreement and any amendments, without the consent of the Sponsor.

3. Sponsor, by accepting this Grant certifies and, upon request, shall furnish proof to the State that it has sufficient funds to meet its share of the costs. The Sponsor grants to the State the right to audit any books and records of the Sponsor to verify expended funds.

Upon execution of this Agreement and written demand by the State, the Sponsor's financial obligation (Amount C) shall be due in cash and payable in full to the State. State may request the Sponsor's financial obligation in partial payments. Should the Sponsor fail to pay their obligation, either in whole or in part, within 30 days of written demand, the State may exercise its rights under Paragraph V-3. Likewise, should the State be unwilling or unable to pay its obligation in a timely manner, the failure to pay shall be considered a breach and the Sponsor may exercise any rights and remedies it has at law or equity.

The State shall reimburse or credit the Sponsor, at the financial closure of the project, any excess funds provided by the Sponsor which exceed Sponsor's share (Amount C).

4. The Sponsor specifically agrees that it shall pay any project costs which exceed the amount of financial participation agreed to by the State. It is further agreed that the Sponsor will reimburse the State for any payment or payments made by the State which are in excess of the percentage of financial assistance (Amount B) as stated in Paragraph II-1.

5. Scope of Services may be accomplished by State contracts or through local contracts of the Sponsor as determined appropriate by the State. All locally contracted work must be approved by the State for scope and reasonable cost. Reimbursement requests for locally contracted work shall be submitted on forms provided by the State and shall include copies of the invoices for materials or services. Payment shall be made for no more than 50% of allowable charges.

   The State will not participate in funding for force account work conducted by the Sponsor.

6. This Grant shall terminate upon completion of the scope of services.

Part III - Sponsor Responsibilties

1. In accepting this Grant, if applicable, the Sponsor guarantees that:

   a. it will, in the operation of the facility, comply with all applicable state and federal laws, rules, regulations, procedures, covenants and assurances required by the State in connection with this Grant; and

   b. the Airport or navigational facility which is the subject of this Grant shall be controlled by the Sponsor for a period of at least 20 years; and

   c. consistent with safety and security requirements, it shall make the airport or air navigational facility available to all types, kinds and classes of aeronautical use without discrimination between such types, kinds and classes and shall provide adequate public access during the period of this Grant; and

   d. it shall not grant or permit anyone to exercise an exclusive right for the conduct of aeronautical actvity on or about an airport landing area. Aeronautical activities include, but are not limited to scheduled airline flights, charter flights, flight instruction, aircraft sales, rental and repair, sale of aviation petroleum products and aerial applications. The landing area consists of runways or landing strips, taxiways, parking aprons, roads, airport lighting and navigational aids; and

   e. it shall not enter into any agreement nor permit any aircraft to gain direct ground access to the sponsor's airport from private property adjacent to or in the immediate area of the airport. Further, Sponsor shall not allow aircraft direct ground access to private property. Sponsor shall be subject to this prohibition, commonly known as a "through-the-fence operation," unless an exception is granted in writing by the State due to extreme circumstances; and

f. it shall not permit non-aeronautical use of airport facilities without prior approval of the State; and

g. the Sponsor shall submit to the State annual statements of airport revenues and expenses when requested; and

h. all fees collected for the use of the airport shall be reasonable and nondiscriminatory. The proceeds from such fees shall be used solely for the development, operation and maintenance of the airport or navigational facility; and

i. an Airport Fund shall be established by resolution, order or ordinance in the treasury of the Sponsor, or evidence of the prior creation of an existing airport fund or properly executed copy of the resolution, order, or ordinance creating such a fund, shall be submitted to the State. The fund may be an account as part of another fund, but must be accounted for in shuch a manner that all revenues, expenses, retained earnings, and balances in the account are discernible from other types of moneys identified in the fund as a whole. All fees, charges, rents, and money from any source derived from airport operations must be deposited in the Airport Fund and shall not be diverted to the general revenue fund or an other revenue fund of the Sponsor. All expenditures from the Airport Fund shall be solely for airport purposes. Sponsor shall be ineligible for a subsequent grant or loan by the State unless, prior to such subsequent grant or loan, Sponsor has complied with the requirements of this subparagraph; and

j. the Sponsor shall operate runway lighting at least at low intensity from sunset to sunrise; and

k. insofar as it is reasonable and within its power, Sponsor shall adopt and enforce zoning regulations to restrict the height of structures and use of land adjacent to or in the immediate vicinity of the airport to heights and activities compatible with normal airport operations as provided in Tex. Loc. Govt. Code Ann. Sections 241.001 et seq. (Vernon and Vernon Supp.). Sponsor shall also acquire and retain aviation easements or other property interests in or rights to use of land or airspace, unless sponsor can show that acquisition and retention of such interest will be impractical or will result in undue hardship to Sponsor. Sponsor shall be ineligible for a subsequent grant or loan by the State unless Sponsor has, prior to subsequent approval of a grant or loan, adopted and passed an airport hazard zoning ordinance or order approved by the State.

l. mowing services will not be eligible for state financial assistance. Sponsor will be responsible for 100% of any mowing services.

2. The Sponsor, to the extent of its legal authority to do so, shall save harmless the State, the State's agents, employees or contractors from all claims and liability due to activities of the Sponsor, the Sponsor's agents or employees performed under this agreement. The Sponsor, to the extent of its legal authority to do so, shall also save harmless the State, the State's agents, employees or contractors from any and all expenses, including attorney fees which might be incurred by the State in litigation or otherwise resisting claim or liabilities which might be imposed on the State as the result of those activities by the Sponsor, the Sponsor's agents or employees.

3. The Sponsor's acceptance of this Offer and ratification and adoption of this Grant shall be evidenced by execution of this Grant by the Sponsor. The Grant shall comprise a contract, constituting the obligations and rights of the State of Texas and the Sponsor with respect to the accomplishment of the project and the operation and maintenance of the airport.

   If it becomes unreasonable or impractical to complete the project, the State may void this agreement and release the Sponsor from any further obligation of project costs.

4. Upon entering into this Grant, Sponsor agrees to name an individual, as the Sponsor's Authorized Representative, who shall be the State's contact with regard to this project. The Representative shall receive all correspondence and documents associated with this grant and shall make or shall acquire approvals and disapprovals for this grant as required on behalf of the Sponsor, and coordinate schedule for work items as required.

5. By the acceptance of grant funds for the maintenance of eligible airport buildings, the Sponsor certifies that the buildings are owned by the Sponsor. The buildings may be leased but if the lease agreement specifies that the lessee is responsible for the upkeep and repairs of the building no state funds shall be used for that purpose.

6. Sponsor shall request reimbursement of eligible project costs on forms provided by the State. All reimbursement requests are required to include a copy of the invoices for the materials or services. The reimbursement request will be submitted no more than once a month.

7. The Sponsor's acceptance of this Agreement shall comprise a Grant Agreement, as provided by the Transportation Code, Chapter 21, constituting the contractual obligations and rights of the State of Texas and the Sponsor with respect to the accomplishment of the airport maintenance and compliance with the assurances and conditions as provided. Such Grant Agreement shall become effective upon the State's written Notice to Proceed issued following execution of this agreement.

Part IV - Nomination of the Agent

1. The Sponsor designates the State as the party to receive and disburse all funds used, or to be used, in payment of the costs of the project, or in reimbursement to either of the parties for costs incurred.

2. The State shall, for all purposes in connection with the project identified above, be the Agent of the Sponsor. The Sponsor grants the State a power of attorney to act as its agent to perform the following services:

   a. accept, receive, and deposit with the State any and all project funds granted, allowed, and paid or made available by the Sponsor, the State of Texas, or any other entity;

   b. enter into contracts as necessary for execution of scope of services;

   c. if State enters into a contract as Agent: exercise supervision and direction of the project work as the State reasonably finds appropriate. Where there is an irreconcilable conflict or difference of opinion, judgment, order or direction between the State and the Sponsor or any service provider, the State shall issue a written order which shall prevail and be controlling;

   d. receive, review, approve and pay invoices and payment requests for services and materials supplied in accordance with the State approved contracts;

   e. obtain an audit as may be required by state regulations; the State Auditor may conduct an audit or investigation of any entity receiving funds from TxDOT directly under this contract or indirectly through a subcontract under this contract. Acceptance of funds directly under this contract or indirectly through a subcontract under this contract acts as acceptance of the authority of the State Auditor, under the direction of the legislative audit committee, to conduct an audit or investigation in connection with those funds. An entity that is the subject of an audit or investigation must provide the state auditor with access to any information the state auditor considers relevant to the investigation or audit.

   f. reimburse sponsor for approved contract maintenance costs no more than once a month.

Part V - Recitals

1. This Grant is executed for the sole benefit of the contracting parties and is not intended or executed for the direct or incidental benefit of any third party.

2. It is the intent of this grant to not supplant local funds normally utilized for airport maintenance, and that any state financial assistance offered under this grant be in addition to those local funds normally dedicated for airport maintenance.

3. This Grant is subject to the applicable provisions of the Transportation Code, Chapters 21 and 22, and the Airport Zoning Act, Tex. Loc. Govt. Code Ann. Sections 241.001 et seq. (Vernon and Vernon Supp.). Failure to comply with the terms of this Grant or with the rules and statutes shall be considered a breach of this contract and will allow the State to pursue the remedies for breach as stated below.

   a. Of primary importance to the State is compliance with the terms and conditions of this Grant. If, however, after all reasonable attempts to require compliance have failed, the State finds that the Sponsor is unwilling and/or unable to comply with any of the terms of this Grant, the State, may pursue any of the following remedies: (1) require a refund of any financial assistance money expended pursuant to this Grant, (2) deny Sponsor's future requests for aid, (3) request the Attorney General to bring suit seeking reimbursement of any financial assistance money expended on the project pursuant to this Grant, provided however, these remedies shall not limit the State's authority to enforce its rules, regulations or orders as otherwise provided by law, (4) declare this Grant null and void, or (5) any other remedy available at law or in equity.

   b. Venue for resolution by a court of competent jurisdiction of any dispute arising under the terms of this Grant, or for enforcement of any of the provisions of this Grant, is specifically set by Grant of the parties in Travis County, Texas.

4. The State reserves the right to amend or withdraw this Grant at any time prior to acceptance by the Sponsor. The acceptance period cannot be greater than 30 days after issuance unless extended by the State.

5. This Grant constitutes the full and total understanding of the parties concerning their rights and responsibilities in regard to this project and shall not be modified, amended, rescinded or revoked unless such modification, amendment, rescission or revocation is agreed to by both parties in writing and executed by both parties.

6. All commitments by the Sponsor and the State are subject to constitutional and statutory limitations and restrictions binding upon the Sponsor and the State (including Sections 5 and 7 of Article 11 of the Texas Constitution, if applicable) and to the availability of funds which lawfully may be applied.

Part VI - Acceptances

Sponsor

The County of Jefferson, Texas, does ratify and adopt all statements, representations, warranties, covenants, agreements, and all terms and conditions of this Grant.

Executed this _____ day of _____, 20____.

The County of Jefferson, Texas
Sponsor

_____ _____
Witness Signature Sponsor Signature

_____ _____
Witness Title Sponsor Title

Certificate of Attorney

I, _____, acting as attorney for the County of Jefferson, Texas, do certify that I have fully examined the Grant and the proceedings taken by the Sponsor relating to the acceptance of the Grant, and find that the manner of acceptance and execution of the Grant by the Sponsor, is in accordance with the laws of the State of Texas.

Dated at _____, Texas, this _____ day of _____, 20____.

_____ _____
Witness Signature Attorney's Signature

_____
Witness Title

Acceptance of the State

Executed by and approved for the Texas Transportation Commission for the purpose and effect of activating and/or carrying out the orders, established policies or work programs and grants heretofore approved and authorized by the Texas Transportation Commission.

STATE OF TEXAS

TEXAS DEPARTMENT OF TRANSPORTATION

By:_____

Date:_____

Attachment A

Scope of Services
TxDOT Project ID: M1820BMPT

Eligible Scope Item	Estimated Costs Amount A	State Share Amount B	Sponsor Share Amount C
GENERAL MAINTENANCE	$100,000.00	$50,000.00	$50,000.00
TOTAL	$100,000.00	$50,000.00	$50,000.00

Accepted By: The County of Jefferson, Texas

_____

Signature

Title:_____

Date:_____

GENERAL MAINTENANCE: As needed, Sponsor may contract for services / purchase materials for routine maintenance / improvement of airport pavements, signage, drainage, AWOS systems, approach aids, lighting systems, utility infrastructure, fencing, herbicide / application, sponsor owned and operated fuel systems, hangars, terminal buildings and security systems; professional services for environmental compliance, approved project design. Special projects to be determined and added by amendment.

Only work items as described in Attachment A, Scope of Services of this Grant are reimbursable under this grant.

CERTIFICATION OF AIRPORT FUND

TxDOT Project ID: M1820BMPT

The County of Jefferson does certify that an Airport Fund has been established for the Sponsor, and that all fees, charges, rents, and money from any source derived from airport operations will be deposited for the benefit of the Airport Fund and will not be diverted for other general revenue fund expenditures or any other special fund of the Sponsor and that all expenditures from the Fund will be solely for airport purposes. The fund may be an account as part of another fund, but must be accounted for in such a manner that all revenues, expenses, retained earnings, and balances in the account are discernible from other types of moneys identified in the fund as a whole.

The County of Jefferson, Texas
(Sponsor)

By:_____

Title:_____

Date:_____

Certification of State Single Audit Requirements

I, _____, do certify that the County of Jefferson, Texas,
(Designated Representative)
will comply with all requirements of the State of Texas Single Audit Act if the County of Jefferson, Texas, spends or receives more than the threshold amount in any grant funding sources during the most recently audited fiscal year. And in following those requirements, the County of Jefferson, Texas, will submit the report to the audit division of the Texas Department of Transportation. If your entity did not meet the threshold in grant receivables or expenditures, please submit a letter indicating that your entity is not required to have a State Single Audit performed for the most recent audited fiscal year.

_____
Signature

_____
Title

_____
Date

DESIGNATION OF SPONSOR'S AUTHORIZED REPRESENTATIVE

TxDOT Project ID: M1820BMPT

The County of Jefferson, Texas, designates, _____
(Name, Title)

as the Sponsor's authorized representative, who shall receive all correspondence and documents associated with this grant and who shall make or shall acquire approvals and disapprovals for this grant as required on behalf of the Sponsor.

The County of Jefferson, Texas
(Sponsor)

By: _____

Title: _____

Date: _____

DESIGNATED REPRESENTATIVE

Mailing Address: _____

_____

_____

_____

Overnight Mailing Address: _____

_____

_____

_____

Telephone Number: _____

Fax Number: _____

Email Address: _____

MEMORANDUM

TO: COMMISSIONERS COURT

FROM: **FRAN LEE**

SUBJECT: BUDGET TRANSFER

DATE: AUGUST 22, 2017

The following budget transfer for the Court Master is necessary for additional cost for employee insurance.

120-2055-412-2003	Employees Insurance $5,500	
120-2055-412-5077	Contractual Services	$ 5,500

EARL WHITE
Jefferson County Constable
Precinct 1
1085 Pearl Street
Beaumont, TX 77701

Memo

Date: August 21, 2017

To: Fran Lee, Financial Manager **Fax #:** (409) 839-2369

From: Constable's Office Precinct 1 **Fax #:** *(409) 839-2350*

RE: Transfer Line Item

Priority: [Urgent]

Line-item Transfer Amendment

DATE: August 21, 2017
Honorable Commissioners Court of Jefferson County:
I submit to you for your consideration the following line-item transfers:

	FUND	DEPT.	FROM	TO
From:	Computer Equipment	120-3065-425-60-02	500	
From:	Automobiles	120-3065-425-60-07	8,375	
To:	Minor Equipment	120-3065-425-.30-84		8,875
From:	Computer Equipment	120-3065-425-6002	2,200	
To:	Ammunition	120-3065-425-3002		2,200
Reason:	To cover costs Tasers, Portable Radio and (Watch Guard In Car) for Part Time Deputy			

E. O. White

Department Head /Chief Clerk-Administrative Assistant

Approved: County Judge for Commissioners Court

Attest: County Clerk

Jefferson County Constable Precinct 1

EARL WHITE
1085 Pearl Street, Suite 103
Beaumont, TX 77701-3544
Phone: (409) 835-8450
Fax: (409) 839-2350
EMAIL: ewhite@co.jefferson.tx.us

Monday, August 21, 2017

Patrick Swain, County Auditor
Commissioner Eddie Arnold, Pct. 1
Commissioner Brent Weaver, Pct. 2
Commissioner Michael Sinegal, Pct. 3
Commissioner "Bo" Alfred, Pct. 4
Jeff Branick, County Judge

Honorable Commissioners' Court:

We have a Part Time Deputy and has been very helpful to this office not only because he is an experienced Deputy but also an ex-Constable. We are also ordering a Portable Radio and a two Tasers. The vehicle Deputy Wiggins drives does not have the In Car Video Cam as required by law.

It is required to have the In-Car Video Cam when transporting prisoners, and to document interactions with citizens, be it male or female. Deputy Wiggins will be issued a Taser and the other Taser will be used as a spare in the event one is being repaired or is broken we will have an extra Taser in reserve. We want out Part-Time Deputy to have everything needed to perform his regular duties therefore we are requesting a new portable radio as well.

The estimate costs:

Watch Guard In-Car Video Cam		$ 4,820.00
Tasers Each	$ 1,175.00 Each	$ 2,350.00
Portable Radio		$ 4,285.00
Total		$11,455.00

★★★★★★★★

4RE/VISTA Price Quote

CUSTOMER: Jefferson County Constable - Precinct 1

Jefferson County Auditor - AP,
1085 Pearl St, 7th floor,Suite 103,
Beaumont,TX,United States,
77701

ATTENTION: Vo Chatman

PHONE: 409-835-8450

E-MAIL:

ISSUED: 8/16/2017 3:40 PM

EXPIRATION: 11/30/2017 6:00 AM

TOTAL PROJECT ESTIMATED AT: $4,820.00

SALES CONTACT: Dave Childress

DIRECT: (281) 782-2544

E-MAIL: DChildress@WatchGuardVideo.com

4RE and VISTA Proposal

4RE In-Car System and Options

Part Number	Detail	Qty	Direct	Discount	Total Price
4RE-STD-GPS-RV2	4RE Standard DVR Camera System with integrated 200GB automotive grade hard drive, 16GB USB removable thumb drive, rear facing cabin camera, GPS, hardware, cabling and your choice of mounting bracket.	1.00	$4,795.00	$0.00	$4,795.00

4RE Hardware Warranties

Part Number	Detail	Qty	Direct	Discount	Total Price
WAR-4RE-CAR-1ST	Warranty, 4RE, In-Car, 1st Year (Months 1-12)	1.00	$0.00	$0.00	$0.00

Shipping and Handling

Part Number	Detail	Qty	Direct	Discount	Total Price
Freight	Shipping/Handling and Processing Charges	1.00	$25.00	$0.00	$25.00

$4,820.00

Total Estimated Tax, may vary from State to State $0.00

Configuration Discounts	**$0.00**
Additional Quote Discount	**$0.00**
Total Amount	**$4,820.00**

NOTE: This is only an estimate for 4RE & VISTA related hardware, software and WG Technical Services. Actual costs related to a turn-key operation requires more detailed discussion and analysis, which will define actual back-office costs and any costs associated with configuration, support and installation. Please contact your sales representative for more details.

415 Century Parkway • Allen, TX • 75013
Toll Free (800) 605-6734 • Main (972) 423-9777 • Fax (972) 423-9778
www.WatchGuardVideo.com

WATCH GUARD

4RE/VISTA Price Quote

To accept this quotation, sign, date and return with Purchase Order: _____ DATE: _____

415 Century Parkway • Allen, TX • 75013
Toll Free (800) 605-6734 • Main (972) 423-9777 • Fax (972) 423-9778
www.WatchGuardVideo.com

Axon Enterprise, Inc.
Protect Life.

17800 N 85th St.
Scottsdale, Arizona 85255
United States
Phone: (800) 978-2737
Fax: 888-843-4309

Mark Mann
(409) 835-8450
mmann@co.jefferson.tx.us

Quotation

Quote: Q-130753-1
Date: 8/21/2017 6:36 AM
Quote Expiration: 10/31/2017
Contract Start Date*: 8/21/2017
Contract Term: 1 year

AX Account Number:
465883

Bill To:
Jefferson County Constable Pct. 1
AUDITORS OFFICE
1149 PEARL ST., 7TH FLOOR
Beaumont, TX 77701
US

Ship To:
Mark Mann
Jefferson County Constable Pct. 1
1085 Pearl St., Suite 103
Beaumont, TX 77701
US

SALESPERSON	PHONE	EMAIL	DELIVERY METHOD	PAYMENT METHOD
Colin Fine	480-463-2167	cfine@taser.com	Fedex - Ground	Net 30

*Note this will vary based on the shipment date of the product.

Hardware

QTY	ITEM #	DESCRIPTION	UNIT PRICE	TOTAL BEFORE DISCOUNT	DISCOUNT ($)	NET TOTAL
1	11003	HANDLE, YELLOW, CLASS III, X26P	USD 964.05	USD 964.05	USD 0.00	USD 964.05
1	11504	HOLSTER, BLACKHAWK, LEFT, X26P	USD 57.04	USD 57.04	USD 0.00	USD 57.04
2	44203	CARTRIDGE - 25' HYBRID	USD 29.30	USD 58.60	USD 0.00	USD 58.60
1	22010	PPM, BATTERY PACK, STANDARD, X2/ X26P	USD 58.38	USD 58.38	USD 0.00	USD 58.38
					Hardware Total Before Discounts:	USD 1,138.07
					Hardware Net Amount Due:	USD 1,138.07

Extended Warranties

QTY	ITEM #	DESCRIPTION	UNIT PRICE	TOTAL BEFORE DISCOUNT	DISCOUNT ($)	NET TOTAL
1	11004	WARRANTY, 4 YEAR, X26P	USD 297.75	USD 297.75	USD 0.00	USD 297.75
					Extended Warranties Total Before Discounts:	USD 297.75
					Extended Warranties Net Amount Due:	USD 297.75

MOTOROLA SOLUTIONS

Quote Number: QU0000402500
Effective: 10 MAY 2017
Effective To: 09 JUL 2017

Bill-To:
JEFFERSON COUNTY AUDITORS OFFICE
1149 PEARL ST 7TH FLR
BEAUMONT, TX 77701
United States

Ultimate Destination:
JEFFERSON COUNTY CONSTABLE PCT. 1
1085 PEARL STREET
BEAUMONT, TX 77701
United States

Attention:
Name: Constable Earl White
Email: ewhite@co.jefferson.tx.us
Phone: 409.835.8450

Sales Contact:
Name: Mike Wise
Email: mike@kayelectronics.com
Phone: 4098421776

Contract Number: HGAC
Freight terms: FOB Destination
Payment terms: Net 30 Due

Item	Quantity	Nomenclature	Description	Your price	Extended Price
1	6	H98UCF9PW6BN	APX6000 700/800 MODEL 2.5 PORTABLE	$3,893.25	$23,359.50
1a	6	QA01648AA	ADD: ADVANCED SYSTEM KEY - HARDWARE KEY		
1b	6	H885BK	ADD: 3 YEAR SERVICE FROM THE START LITE		
1c	6	Q806BM	ADD: ASTRO DIGITAL CAI OPERATION		
1d	6	QA01833AH	ADD: EXTREME 1-SIDED NOISE REDUCTION		
1e	6	H38BT	ADD: SMARTZONE OPERATION		
1f	6	Q361AR	ADD: P25 9600 BAUD TRUNKING		
2	6	NNTN8860A	CHARGER, SINGLE-UNIT, IMPRES 2, 3A, 115VAC, US/NA	$112.50	$675.00
3	6	PMMN4069A	IMPRES RSM, 3.5MM JACK, IP55	$96.80	$580.80
4	6	PMNN4485A	BATT IMPRES 2 LIION R IP68 2550T	$101.60	$609.60

$4,205

Total Quote in USD $25,224.90

Quote is H-GAC discounted.

Quote does NOT include programming.

PO Issued to Motorola Solutions Inc. must:
>Be a valid Purchase Order (PO)/Contract/Notice to Proceed on Company Letterhead. Note: Purchase Requisitions cannot be accepted
>Have a PO Number/Contract Number & Date
>Identify "Motorola Solutions Inc." as the Vendor
>Have Payment Terms or Contract Number
>Be issued in the Legal Entity's Name
>Include a Bill-To Address with a Contact Name and Phone Number
>Include a Ship-To Address with a Contact Name and Phone Number
>Include an Ultimate Address (only if different than the Ship-To)
>Be Greater than or Equal to the Value of the Order

NAME	AMOUNT	CHECK NO.	TOTAL
JURY FUND			
TRI-CITY COFFEE SERVICE	529.75	437276	
DAWN DONUTS	91.00	437416	
			620.75**
ROAD & BRIDGE PCT.#1			
SPIDLE & SPIDLE	396.03	437200	
M&D SUPPLY	129.09	437240	
MUNRO'S	29.65	437244	
NEFF BROS. AUTO SERVICE	305.00	437245	
AT&T	65.84	437266	
SOUTHERN TIRE MART, LLC	154.50	437285	
MARTIN PRODUCT SALES LLC	648.96	437339	
ADVANCE AUTO PARTS	386.60	437374	
GULF COAST	568.10	437431	
LJ'S HYDRAULIC & AIR REPAIR	2,835.07	437433	
			5,518.84**
ROAD & BRIDGE PCT.#2			
SPIDLE & SPIDLE	4,234.86	437200	
SUPERIOR TIRE & SERVICE	181.18	437207	
M&D SUPPLY	26.22	437240	
MUNRO'S	20.00	437244	
RITTER @ HOME	12.65	437259	
DEPARTMENT OF INFORMATION RESOURCES	.01	437294	
SUPERIOR SUPPLY & STEEL	68.00	437295	
NEW WAVE WELDING TECHNOLOGY	6.82	437349	
ASCO	121.35	437376	
MEMBER'S BUILDING MAINTENANCE LLC	149.50	437381	
SILSBEE FORD INC	385.00	437386	
GULF COAST	192.85	437431	
LJ'S HYDRAULIC & AIR REPAIR	403.68	437433	
			5,802.12**
ROAD & BRIDGE PCT. # 3			
MID-COUNTY ALTERNATOR	165.00	437243	
MUNRO'S	38.40	437244	
SMART'S TRUCK & TRAILER, INC.	446.00	437263	
MOTOROLA SOLUTIONS INC	650.10	437290	
HOWARD'S AUTO SUPPLY	284.25	437291	
DEPARTMENT OF INFORMATION RESOURCES	.06	437294	
DRAGO SUPPLY	54.24	437359	
ASCO	540.80	437376	
SHOPPA'S FARM SUPPLY	3,052.53	437397	
			5,231.38**
ROAD & BRIDGE PCT.#4			
A&A EQUIPMENT	233.75	437192	
COASTAL WELDING SUPPLY	358.35	437218	
COTTON CARGO	108.75	437220	
CASH ADVANCE ACCOUNT	347.80	437231	
M&D SUPPLY	198.71	437240	
MUNRO'S	84.14	437244	
OIL CITY TRACTORS, INC.	2,363.44	437249	
DEPARTMENT OF INFORMATION RESOURCES	.05	437294	
UNITED STATES POSTAL SERVICE	22.19	437309	
ROSS RIDGE SAND COMPANY LP	97.50	437344	
ON TIME TIRE	95.99	437369	
SOUTHEAST TEXAS PARTS AND EQUIPMENT	212.77	437387	
GCR TIRES & SERVICE	320.55	437395	
			4,443.99**
ENGINEERING FUND			
UNITED STATES POSTAL SERVICE	1.19	437309	
			1.19**
PARKS & RECREATION			
BEAUMONT BRICK & STONE	213.40	437197	
			213.40**
GENERAL FUND			

NAME	AMOUNT	CHECK NO.	TOTAL
JEFFERSON CTY. CONSTABLE PCT. 6	459.42	437198	
			459.42*
TAX OFFICE			
PITNEY BOWES, INC.	1,082.25	437255	
DEPARTMENT OF INFORMATION RESOURCES	.02	437294	
UNITED STATES POSTAL SERVICE	354.92	437309	
ROCHESTER ARMORED CAR CO INC	352.00	437363	
SOUTHERN SUPPLY	38.50	437425	
			1,827.69*
COUNTY HUMAN RESOURCES			
UNITED STATES POSTAL SERVICE	2.42	437309	
TEXAS PRIMA	380.00	437346	
			382.42*
AUDITOR'S OFFICE			
OFFICE DEPOT	492.89	437248	
UNITED STATES POSTAL SERVICE	11.40	437309	
			504.29*
COUNTY CLERK			
OFFICE DEPOT	234.99	437248	
DECISION ONE CORPORATION	342.90	437283	
UNITED STATES POSTAL SERVICE	291.24	437309	
RICOH USA INC	236.00	437373	
THOMSON REUTERS-WEST	131.00	437377	
			1,236.13*
COUNTY JUDGE			
CASH ADVANCE ACCOUNT	137.71	437231	
JOHN E MACEY	500.00	437241	
UNITED STATES POSTAL SERVICE	1.38	437309	
ROCKY LAWDERMILK	2,000.00	437320	
HARVEY L WARREN III	1,600.00	437357	
WILLIAM FORD DISHMAN	500.00	437383	
JAN GIROUARD & ASSOCIATES LLC	200.00	437419	
ELIZABETH MCKIM	500.00	437432	
			5,439.09*
RISK MANAGEMENT			
FED EX	40.48	437225	
OFFICE DEPOT	305.91	437248	
UNITED STATES POSTAL SERVICE	3.11	437309	
			349.50*
COUNTY TREASURER			
OFFICE DEPOT	100.74	437248	
TAC - TEXAS ASSN. OF COUNTIES	150.00	437269	
UNITED STATES POSTAL SERVICE	260.45	437309	
			511.19*
PURCHASING DEPARTMENT			
OFFICE DEPOT	72.67	437248	
UNITED STATES POSTAL SERVICE	2.13	437309	
			74.80*
GENERAL SERVICES			
CASH ADVANCE ACCOUNT	40.00	437231	
SPINDLETOP MHMR	32,990.75	437236	
OLMSTED-KIRK PAPER	2,375.60	437250	
TIME WARNER COMMUNICATIONS	610.91	437271	
CROWN CASTLE INTERNATIONAL	1,499.91	437328	
TFORCE FINAL MILE	8.25	437438	
			37,525.42*
DATA PROCESSING			
IP SWITCH, INC.	755.69	437209	
VERIZON WIRELESS	75.98	437306	
			831.67*
VOTERS REGISTRATION DEPT			
UNITED STATES POSTAL SERVICE	192.90	437309	
			192.90*
ELECTIONS DEPARTMENT			

NAME	AMOUNT	CHECK NO.	TOTAL
M&D SUPPLY	27.96	437240	
LANGUAGE USA INC	360.00	437410	
PV RENTALS LLC	129.87	437418	
			517.83*
DISTRICT ATTORNEY			
JEFFERSON CTY. YOUNG LAWYER'S ASSOC	50.00	437203	
GT DISTRIBUTORS, INC.	705.37	437226	
ELIZABETH PARKS	436.50	437251	
JAMES ARCENEAUX	897.48	437307	
UNITED STATES POSTAL SERVICE	174.35	437309	
CHILD ABUSE & FORENSIC SERVICES	125.00	437315	
KIM PIPKIN	1,313.64	437382	
HIGGINBOTHAM INSURANCE AGENCY INC	71.00	437401	
TATIANA ZELEZNIACK	1,190.18	437412	
			4,963.52*
DISTRICT CLERK			
TRI-CITY COFFEE SERVICE	313.50	437276	
UNITED STATES POSTAL SERVICE	402.23	437309	
			715.73*
CRIMINAL DISTRICT COURT			
TEXAS COURT REPORTERS ASSOCIATION	300.00	437275	
RENE MULHOLLAND	199.00	437277	
KEVIN S. LAINE	800.00	437288	
UNITED STATES POSTAL SERVICE	30.11	437309	
MELISSA NAIL	80.50	437421	
			1,409.61*
136TH DISTRICT COURT			
UNITED STATES POSTAL SERVICE	.81	437309	
			.81*
252ND DISTRICT COURT			
THOMAS J. BURBANK PC	2,295.00	437214	
RIFE KIMLER, LAW OFFICE OF	800.00	437232	
TEXAS COURT REPORTERS ASSOCIATION	150.00	437275	
KEVIN S. LAINE	800.00	437288	
JOHN D WEST	800.00	437298	
UNITED STATES POSTAL SERVICE	70.20	437309	
LANGSTON ADAMS	800.00	437322	
			5,715.20*
279TH DISTRICT COURT			
PHILLIP DOWDEN	1,575.00	437210	
LAIRON DOWDEN, JR.	700.00	437221	
MARVA PROVO	325.00	437256	
ANITA F. PROVO	300.00	437257	
NATHAN REYNOLDS, JR.	1,450.00	437258	
BRACK JONES JR.	325.00	437286	
LANGSTON ADAMS	300.00	437322	
JOEL WEBB VAZQUEZ	75.00	437331	
KIMBERLY PHELAN, P.C.	75.00	437336	
KATY LEIGH DELAHOUSSAYE	500.00	437353	
REALTIME REPORTING SERVICES INC.	117.30	437366	
WILLIAM FORD DISHMAN	650.00	437383	
BRYAN E MCEACHERN PC	500.00	437385	
DANE DENNISON	75.00	437393	
MELANIE AIREY	450.00	437402	
LAW OFFICE OF J SCOTT FREDERICK	75.00	437403	
ANDREW P GERTZ	100.00	437407	
GORDON D FRIESZ	1,000.00	437411	
			8,592.30*
317TH DISTRICT COURT			
CASH ADVANCE ACCOUNT	1,441.74	437231	
TEXAS COURT REPORTERS ASSOCIATION	150.00	437275	
UNITED STATES POSTAL SERVICE	3.22	437309	
JUDY PAASCH	2,323.90	437333	
			3,918.86*
JUSTICE COURT-PCT 1 PL 1			

NAME	AMOUNT	CHECK NO.	TOTAL
CASH ADVANCE ACCOUNT	188.72	437231	
UNITED STATES POSTAL SERVICE	40.22	437309	
			228.94*
JUSTICE COURT-PCT 4			
OFFICE DEPOT	344.72	437248	
RAY S. CHESSON	73.83	437284	
DEPARTMENT OF INFORMATION RESOURCES	.29	437294	
			418.84*
JUSTICE COURT-PCT 6			
BEAUMONT ENTERPRISE	319.80	437223	
UNITED STATES POSTAL SERVICE	26.55	437309	
SIERRA SPRING WATER CO. - BT	29.10	437310	
			375.45*
JUSTICE COURT-PCT 7			
CASH ADVANCE ACCOUNT	198.36	437231	
DEPARTMENT OF INFORMATION RESOURCES	.21	437294	
			198.57*
JUSTICE OF PEACE PCT. 8			
UNITED STATES POSTAL SERVICE	20.96	437309	
			20.96*
COUNTY COURT AT LAW NO. 2			
MARVA PROVO	300.00	437256	
NATHAN REYNOLDS, JR.	250.00	437258	
UNITED STATES POSTAL SERVICE	2.82	437309	
SAMUEL & SON LAW FIRM PLLC	250.00	437396	
			802.82*
COUNTY COURT AT LAW NO. 3			
TODD W LEBLANC	250.00	437196	
DONALD BOUDREAUX	250.00	437213	
BRUCE N. SMITH	600.00	437264	
UNITED STATES POSTAL SERVICE	3.22	437309	
DANIEL CLAYTON	250.00	437311	
LAURIE PEROZZO	250.00	437355	
MATUSKA LAW FIRM	250.00	437388	
SAMUEL & SON LAW FIRM PLLC	800.00	437396	
			2,653.22*
COURT MASTER			
UNITED STATES POSTAL SERVICE	.81	437309	
			.81*
MEDIATION CENTER			
UNITED STATES POSTAL SERVICE	2.42	437309	
			2.42*
COMMUNITY SUPERVISION			
AAA LOCK & SAFE	112.50	437191	
			112.50*
SHERIFF'S DEPARTMENT			
FAST SIGNS, INC.	245.28	437224	
KIRKSEY'S SPRINT PRINTING	24.95	437234	
LOUIS' YAZOO SALES & SERVICE, LLC	364.30	437237	
OFFICE DEPOT	80.79	437248	
DEPARTMENT OF INFORMATION RESOURCES	533.82	437294	
UNITED STATES POSTAL SERVICE	1,458.41	437309	
FIVE STAR FEED	395.60	437326	
LEADSONLINE	5,508.00	437342	
SIRCHIE FINGER PRINT LABORATORIES	437.21	437365	
GALLS LLC	126.70	437406	
SOUTHEAST TEXAS OCCUPATIONAL MEDICI	475.00	437420	
SOUTHEAST TEXAS EQUINE AND VETERINA	140.00	437448	
			9,790.06*
CRIME LABORATORY			
ABACUS DIAGNOSTIC, INC.	729.00	437205	
OFFICE DEPOT	274.44	437248	

NAME	AMOUNT	CHECK NO.	TOTAL
LARRY'S REFRIGERATION	1,915.28	437296	
SOUTHWESTERN ASSOCIATION OF	35.00	437297	
AIRGAS SOUTHWEST	1,067.73	437348	
JULIE HANNON	600.00	437378	
			4,621.45*
JAIL - NO. 2			
HILO / O'REILLY AUTO PARTS	22.74	437195	
KIMCO SERVICES, INC.	905.50	437204	
BEAUMONT TRACTOR COMPANY	18.56	437211	
CITY OF BEAUMONT - WATER DEPT.	15,475.32	437215	
ECOLAB	399.90	437222	
KOMMERCIAL KITCHENS	488.00	437235	
M&D SUPPLY	209.94	437240	
OFFICE DEPOT	349.94	437248	
SANITARY SUPPLY, INC.	3,168.32	437261	
SUTHERLAND LUMBER CO.	26.94	437267	
WARREN EQUIPMENT CO.	238.15	437279	
WHOLESALE ELECTRIC SUPPLY CO.	94.37	437280	
WORTH HYDROCHEM	327.00	437282	
OAK FARM DAIRY	5,754.00	437287	
CDW COMPUTER CENTERS, INC.	212.43	437292	
DEPARTMENT OF INFORMATION RESOURCES	3.12	437294	
MODICA BROS. TIRES & WHEELS	211.70	437312	
WESTERN DETENTION PRODUCTS, INC.	1,823.00	437314	
LOWE'S HOME CENTERS, INC.	11.55	437318	
BELT SOURCE	11.53	437337	
SOUTHEAST TEXAS STARTER	136.42	437345	
WORLD FUEL SERVICES	246.00	437356	
INDEPENDENT STATIONERS	327.34	437367	
SAM'S CLUB DIRECT	615.32	437371	
CONMED INC	4,040.32	437375	
THOMSON REUTERS-WEST	903.00	437377	
KROPP HOLDINGS INC	310.14	437380	
SUPERIOR MEAT SERVICES	812.00	437409	
LONE STAR UNIFORMS	431.88	437415	
THE MONOGRAM SHOP	9.00	437437	
FOOD MARKETING CONCEPTS INC	9,128.95	437442	
HARDIE'S FRESH FOODS	4,787.66	437443	
BIMBO BAKERIES USA INC	2,447.60	437447	
			53,947.64*
JUVENILE PROBATION DEPT.			
LARONDA TURNER	118.23	437252	
VERIZON WIRELESS	86.86	437306	
UNITED STATES POSTAL SERVICE	13.38	437309	
			218.47*
JUVENILE DETENTION HOME			
ALL STAR PLUMBING	152.50	437208	
CITY OF BEAUMONT - WATER DEPT.	2,870.54	437215	
LOWE'S HOME CENTERS, INC.	198.00	437318	
FLOWERS FOODS	117.01	437329	
BEN E KEITH FOODS	206.41	437330	
VACUUM CITY	891.96	437340	
WASTEWATER TRANSPORT SERVICES LLC	918.00	437392	
			5,354.42*
CONSTABLE PCT 1			
GT DISTRIBUTORS, INC.	30.32	437226	
VERIZON WIRELESS	227.94	437306	
UNITED STATES POSTAL SERVICE	64.66	437309	
GALLS LLC	76.00	437406	
			398.92*
CONSTABLE-PCT 2			
VERIZON WIRELESS	113.97	437306	
AXON ENTERPRISE INC	1,104.36	437439	
			1,218.33*
CONSTABLE-PCT 4			
VERIZON WIRELESS	113.97	437306	
			113.97*
CONSTABLE-PCT 6			

NAME	AMOUNT	CHECK NO.	TOTAL
VERIZON WIRELESS	113.97	437306	
UNITED STATES POSTAL SERVICE	12.79	437309	
			126.76*
CONSTABLE PCT. 7			
AT&T	31.80	437266	
VERIZON WIRELESS	113.97	437306	
			145.77*
CONSTABLE PCT. 8			
VERIZON WIRELESS	113.97	437306	
			113.97*
AGRICULTURE EXTENSION SVC			
OFFICE DEPOT	147.01	437248	
UNITED STATES POSTAL SERVICE	38.69	437309	
			185.70*
HEALTH AND WELFARE NO. 1			
CLAYBAR FUNERAL HOME, INC.	3,407.00	437216	
PETTY CASH - N C WELFARE	128.77	437253	
AUSTIN CECIL WALKES MD PA	3,245.08	437278	
UNITED STATES POSTAL SERVICE	99.46	437309	
PROCTOR'S MORTUARY INC	300.00	437358	
THE MEDICAL PROTECTIVE COMPANY	4,035.00	437379	
EQUIFAX WORKFORCE SOLUTIONS	44.85	437430	
			11,260.16*
HEALTH AND WELFARE NO. 2			
CLAYBAR FUNERAL HOME, INC.	999.00	437217	
OFFICE DEPOT	988.32	437248	
TIME WARNER COMMUNICATIONS	117.15	437272	
AUSTIN CECIL WALKES MD PA	3,245.08	437278	
MCKESSON MEDICAL-SURGICAL INC	987.58	437293	
UNITED STATES POSTAL SERVICE	18.61	437309	
THE MEDICAL PROTECTIVE COMPANY	4,035.00	437379	
			10,390.74*
NURSE PRACTITIONER			
GEORGE V. ZUZUKIN, M.D.	1,000.00	437202	
			1,000.00*
CHILD WELFARE UNIT			
J.C. PENNEY'S	2,109.19	437316	
SEARS COMMERICAL CREDIT	1,469.57	437317	
TYMIR WILSON PAYEE	50.00	437338	
J'LYNN HENDRIX	20.00	437354	
ANDREW REISNER	20.00	437361	
FATIMA ZAVALA	20.00	437389	
TYRE A WELLS	130.00	437390	
TRELIN FARR	60.00	437391	
TYTIANNA WELLS SIGARST	100.00	437394	
DONALD ORCHID	20.00	437400	
JAVIER ZAVALA FC	20.00	437405	
AALIYAH J EMERSON	20.00	437408	
MYA ARCENEAUX	90.00	437413	
KENNY ROBINSON	20.00	437422	
RAVEN WILSON	50.00	437423	
SHAWN MOUTON	20.00	437424	
NOAH TORRES FC	15.00	437426	
MARCUS ROBINSON FC	15.00	437427	
KEN'EDE ROBINSON	15.00	437428	
LANDON C MOLO	15.00	437429	
LARRY DOYLE	50.00	437434	
FAITH DOYLE	20.00	437435	
KYVIAUNT PAUL FC	20.00	437440	
CLYDE GAUTHIER III	20.00	437441	
AALAYAH GRIFFIN	20.00	437444	
AMYGAI LEWIS	20.00	437445	
COLTON HICKMAN	15.00	437449	
DAVID ANDERSON	30.00	437450	
ISAAC OLIVER	15.00	437451	
QUINTON SELLS	15.00	437452	

NAME	AMOUNT	CHECK NO.	TOTAL
ROEL CANTU	15.00	437453	
ZACHARY LAND	15.00	437454	
			4,533.76*
ENVIRONMENTAL CONTROL			
AT&T	61.92	437266	
DEPARTMENT OF INFORMATION RESOURCES	.29	437294	
			62.21*
INDIGENT MEDICAL SERVICES			
KING'S PHARMACY	143.98	437206	
DANA JOHNSON	1,800.00	437398	
			1,943.98*
MAINTENANCE-BEAUMONT			
AAA LOCK & SAFE	80.55	437191	
CITY OF BEAUMONT - WATER DEPT.	661.34	437215	
COBURN'S, BEAUMONT BOWIE (1)	7.71	437219	
ENTERGY	46,060.54	437228	
RITTER @ HOME	117.94	437259	
ACE IMAGEWEAR	187.53	437262	
AT&T	5,110.39	437266	
TCT INDUSTRIES, INC.	1,360.00	437274	
DEPARTMENT OF INFORMATION RESOURCES	629.70	437294	
AT&T GLOBAL SERVICES	2,835.00	437325	
BAKER DISTRIBUTING COMPANY	82.30	437327	
			57,133.00*
MAINTENANCE-PORT ARTHUR			
A&B OUTDOOR EQUIPMENT	201.95	437194	
NOACK LOCKSMITH	30.00	437246	
DEPARTMENT OF INFORMATION RESOURCES	.41	437294	
LOWE'S HOME CENTERS, INC.	481.74	437318	
TEXAS GAS SERVICE	325.32	437324	
FIVE STAR FEED	27.50	437326	
PARKER LUMBER	158.32	437360	
MEMBER'S BUILDING MAINTENANCE LLC	2,749.28	437381	
FRED MILLER'S OUTDOOR EQUIPMENT LLC	306.45	437404	
			4,280.97*
MAINTENANCE-MID COUNTY			
ACE IMAGEWEAR	92.24	437262	
MEMBER'S BUILDING MAINTENANCE LLC	1,925.52	437381	
			2,017.76*
SERVICE CENTER			
ACTION AUTO GLASS	255.65	437199	
SPIDLE & SPIDLE	7,337.60	437200	
J.K. CHEVROLET CO.	651.87	437230	
KINSEL FORD, INC.	208.62	437233	
MUNRO'S	39.70	437244	
PHILPOTT MOTORS, INC.	56.17	437254	
VIN'S PAINT & BODY, INC.	7,065.01	437289	
JEFFERSON CTY. TAX OFFICE	7.50	437299	
JEFFERSON CTY. TAX OFFICE	7.50	437300	
JEFFERSON CTY. TAX OFFICE	7.50	437301	
JEFFERSON CTY. TAX OFFICE	7.50	437302	
JEFFERSON CTY. TAX OFFICE	7.50	437303	
JEFFERSON CTY. TAX OFFICE	7.50	437304	
JEFFERSON CTY. TAX OFFICE	7.50	437305	
BUMPER TO BUMPER	813.81	437332	
ROBERT'S TEXACO XPRESS LUBE	133.00	437351	
AMERICAN TIRE DISTRIBUTORS	2,768.00	437352	
MIGHTY OF SOUTHEAST TEXAS	158.67	437368	
SOUTHEAST TEXAS PARTS AND EQUIPMENT	381.48	437387	
WASTEWATER TRANSPORT SERVICES LLC	388.00	437392	
EXTREME AUTO	1,689.00	437446	
			21,999.08*
VETERANS SERVICE			
UNITED STATES POSTAL SERVICE	5.74	437309	
			5.74*
			270,845.77**
MOSQUITO CONTROL FUND			

NAME	AMOUNT	CHECK NO.	TOTAL
MUNRO'S	82.20	437244	
FIRST CALL	49.07	437321	
LJA ENGINEERING INC	1,270.83	437370	
			1,402.10**
J.C. FAMILY TREATMENT			
JUDY PAASCH	50.00	437333	
PATRICIA VELASCO	20.00	437417	
			70.00**
LAW LIBRARY FUND			
LEXISNEXIS MATTHEW BENDER	1,076.69	437319	
THOMSON REUTERS-WEST	182.70	437377	
			1,259.39**
EMPG GRANT			
SOUTHEAST TEXAS WATER	22.85	437265	
TIME WARNER COMMUNICATIONS	85.43	437273	
TRIANGLE ART & FRAME	338.00	437350	
			446.28**
JUVENILE PROB & DET. FUND			
VERIZON WIRELESS	64.42	437306	
			64.42**
COMMUNITY SUPERVISION FND			
OFFICE DEPOT	924.99	437248	
OLMSTED-KIRK PAPER	397.50	437250	
DEPARTMENT OF INFORMATION RESOURCES	1.31	437294	
VERIZON WIRELESS	121.44	437306	
UNITED STATES POSTAL SERVICE	84.99	437309	
REDWOOD TOXICOLOGY LABORATORY	107.50	437341	
JCCSC	300.00	437364	
			1,937.73**
JEFF. CO. WOMEN'S CENTER			
A&A ELECTRIC CO OF BEAUMONT INC	960.75	437193	
BELL'S LAUNDRY	991.15	437212	
ENTERGY	2,046.00	437228	
HAZELDEN EDUCATIONAL MAT	1,875.27	437229	
LUBE SHOP	44.48	437238	
KIM MCKINNEY, LPC, LMFT	300.00	437242	
OFFICE DEPOT	580.74	437248	
AT&T	136.22	437266	
SYSCO FOOD SERVICES, INC.	1,048.69	437268	
DEPARTMENT OF INFORMATION RESOURCES	1.83	437294	
VERIZON WIRELESS	32.17	437306	
BEN E KEITH FOODS	1,103.01	437330	
REDWOOD TOXICOLOGY LABORATORY	1,818.75	437341	
SAM'S CLUB DIRECT	561.94	437371	
			11,501.00**
COMMUNITY CORRECTIONS PRG			
W.W. GRAINGER, INC.	415.36	437227	
M&D SUPPLY	4.56	437240	
SAM HOUSTON STATE UNIVERSITY	250.00	437260	
			669.92**
LAW OFFICER TRAINING GRT			
TEXAS COMMISSION ON LAW ENFORCEMENT	415.50	437347	
			415.50**
COUNTY CLERK - RECORD MGT			
MANATRON	5,510.28	437343	
			5,510.28**
DARE CONTRIBUTIONS FUND			
BEST EXPRESSION	372.90	437201	
			372.90**
DEPUTY SHERIFF EDUCATION			
CASH ADVANCE ACCOUNT	1,045.08	437231	
TEXAS COMMISSION ON LAW ENFORCEMENT	209.50	437347	
			1,254.58**
J.P. COURTROOM TECH. FUND			

NAME	AMOUNT	CHECK NO.	TOTAL
VERIZON WIRELESS	227.94	437306	
			227.94**
HOTEL OCCUPANCY TAX FUND			
ENTERGY	1,327.24	437228	
CASH ADVANCE ACCOUNT	546.50	437231	
M&D SUPPLY	46.43	437240	
MUNRO'S	136.71	437244	
TIME WARNER COMMUNICATIONS	110.53	437270	
TRI-CITY COFFEE SERVICE	72.00	437276	
WILDSEED FARMS	236.50	437281	
DEPARTMENT OF INFORMATION RESOURCES	3.07	437294	
B&G POPCORN INC	231.41	437372	
			2,710.39**
1957 ROAD BOND FUND			
TIM RICHARDSON	10,500.00	437384	
			10,500.00**
CAPITAL PROJECTS FUND			
LJA ENGINEERING INC	1,018.00	437370	
WEAVER CONSULTANTS GROUP	3,450.25	437436	
			4,468.25**
AIRPORT FUND			
DEPARTMENT OF INFORMATION RESOURCES	.33	437294	
VERIZON WIRELESS	37.99	437306	
MEGAN LANDRY	13.18	437399	
			51.50**
SE TX EMP. BENEFIT POOL			
GROUP ADMINISTRATIVE CONCEPTS INC	126,236.50	437362	
			126,236.50**
LIABILITY CLAIMS ACCOUNT			
CALVERT EAVES CLARKE & STELLY LLP	8,692.25	437414	
			8,692.25**
WORKER'S COMPENSATION FD			
TRISTAR RISK MANAGEMENT	7,078.48	437334	
			7,078.48**
SHERIFF'S FORFEITURE FUND			
SPRINT	292.45	437323	
			292.45**
PAYROLL FUND			
JEFFERSON CTY. - FLEXIBLE SPENDING	13,735.50	437163	
CLEAT	288.00	437164	
JEFFERSON CTY. TREASURER	16,639.89	437165	
RON STADTMUELLER - CHAPTER 13	530.00	437166	
INTERNAL REVENUE SERVICE	475.00	437167	
JEFFERSON CTY. ASSN. OF D.S. & C.O.	4,380.00	437168	
JEFFERSON CTY. COMMUNITY SUP.	9,744.40	437169	
JEFFERSON CTY. TREASURER - HEALTH	467,806.63	437170	
JEFFERSON CTY. TREASURER - GENERAL	35.00	437171	
JEFFERSON CTY. TREASURER - PAYROLL	1,580,389.76	437172	
JEFFERSON CTY. TREASURER - PAYROLL	625,029.34	437173	
MONY LIFE INSURANCE OF AMERICA	126.84	437174	
POLICE & FIRE FIGHTERS' ASSOCIATION	2,791.89	437175	
TGSLC	388.77	437176	
UNITED WAY OF BEAUMONT& N JEFFERSON	8.00	437177	
JEFFERSON CTY. TREASURER - TCDRS	597,535.50	437178	
OPPENHEIMER FUNDS DISTRIBUTOR, INC	1,539.99	437179	
JEFFERSON COUNTY TREASURER	2,635.23	437180	
JEFFERSON COUNTY - TREASURER -	6,696.84	437181	
NECHES FEDERAL CREDIT UNION	50,166.89	437182	
JEFFERSON COUNTY - NATIONWIDE	95,862.22	437183	
SBA - U S DEPARTMENT OF TREASURY	168.49	437184	
U S DEPARTMENT OF TREASURY	170.86	437185	
WILLIAM E HEITKAMP	748.53	437186	
JOHN TALTON	2,257.70	437187	
IL DEPT OF HEALTCARD AND FAMILY SER	49.85	437188	

NAME	AMOUNT	CHECK NO.	TOTAL
BELINDA M ZURITA	230.77	437189	
CONSERVE	143.22	437190	
GUARDIANSHIP FEE			3,480,575.11**
THE BYRD LAW FIRM PC	200.00	437335	
JUVENILE DELINQUENCY PREV			200.00**
SHI GOVERNMENT SOLUTIONS, INC.	4,097.00	437313	
CNTY & DIST COURT TECH FD			4,097.00**
VERIZON WIRELESS	265.93	437306	
MARINE DIVISION			265.93**
DEPARTMENT OF INFORMATION RESOURCES	.01	437294	
			.01**
			3,962,977.35***

MEMORANDUM

TO: COMMISSIONERS COURT

FROM: **FRAN LEE**

SUBJECT: BUDGET TRANSFER

DATE: AUGUST 22, 2017

The following budget transfer for the General Services is necessary for additional cost for termination allowance.

120-1024-419-1099	Termination Allowance	$52,000	
120-1024-419-2001	FICA	$ 4,000	
120-1024-419-2002	Employees Retirement	$ 9,000	
120-1024-419-5040	Liability Insurance		$65,000

TEXAS DEPARTMENT OF FAMILY AND PROTECTIVE SERVICES

COMMISSIONER
H. L. Whitman, Jr.

August 24, 2017

The Honorable Jeff R. Branick
Jefferson County
1149 Pearl Street
Beaumont, Texas 77701

RE: FFY 2018-Title IV-E County Legal Services: Contract #23939003

Dear Judge Branick:

DFPS must maintain up-to-date contract records and is conducting a contract file review that includes the following:

- Risk Analysis: DFPS must ensure that current areas of associated risk to the agency are annually identified and contract monitoring activities appropriately prioritized by level of risk.
- Budget to be used for the new contract period. This may include obtaining and approving a revised budget or confirmation of the continued use of the most current budget.
- Federal Funding Accountability and Transparency Act (FFATA) Certification

The document records that are required to be updated and maintained are attached.

- **Form 9105:** Risk Analysis Questionnaire (RAQ)
  - Complete and return Form 9105. Contract staff must complete an annual risk assessment. The Risk Analysis Questionnaire provides staff with information necessary to perform a current and accurate assessment.

9105_FY18.doc

- **Form 2030:** Budget for Purchase of Service Contracts

FY 18IV-E Legal ServicesJeff.xls

- **Form 4734:** Federal Funding Accountability and Transparency Act (FFATA) Certification

4734 FFATA
Certification.doc

It is important that you review the enclosed documents thoroughly, sign and return the attached forms to me at the following address:

Email: shelia.crocker@dfps.state.tx.us

If you have any questions regarding the proper completion of the enclosed documents contact me at (936)569-5335.

Please return the applicable forms within two (2) weeks of receiving this correspondence.

Respectfully,

Shelia Crocker

\\: Shelia Crocker
Contract Manager

Enclosures: Forms 9105, 2030, 4734

Texas Dept. of Family and Protective Services

Budget for Title IV-E
County Legal Services Contract

K909-Form 2030CLIVE
July 2017

Summary

County:	**Jefferson**
Contract Number:	**23939003**
Budget Effective Date:	**10/1/2017-9/30/2018**

Cost Category	Estimated Total Expenses Allocable to Title IV-E	Total Anticipated Federal Reimbursement*	Total Anticipated County Match
A. Administration			
A.1. Direct Personnel Salaries	$237,493.13	$45,995.29	$191,497.83
A.2. Direct Personnel Fringe Benefits	$105,036.77	$20,342.47	$84,694.30
A.3. Direct Personnel Travel	$0.00	$0.00	$0.00
A.4. Direct Materials and Supplies	$3,330.00	$615.87	$2,714.13
A.5. Direct Equipment	$3,600.00	$697.21	$2,902.79
A.6. Direct Other Costs	$24,650.00	$4,773.97	$19,876.03
Total Administration	*$374,109.90*	*$72,424.81*	*$301,685.08*
B. Training			
B.1. Title IV-E Training (75%)	$24,250.00	$7,044.75	$17,205.25
B.2. Title IV-E Fostering Connections Training (75%)	$0.00	$0.00	$0.00
B.3. Non-Title IV-E Training (50%)	$0.00	$0.00	$0.00
Total Training	*$24,250.00*	*$7,044.75*	*$17,205.25*
C. Indirect Costs (if applicable)			
Total Indirect Costs	*$0.00*	*$0.00*	*$0.00*
Grand Total	**$398,359.90**	**$79,469.56**	**$318,890.34**

***Estimated Federal Reimbursement for expenses based on Eligible Population Rate (EPR) during 3rd quarter of the preceding fiscal year:** **38.734%**

Actual reimbursement will be based on EPR in effect for the county during the month in which expenses were incurred.

Indirect Cost Rate, if applicable (attach a copy of the approved Certificate of Indirect Costs): **0.000%**

Contractor Certification

Signature ***Date***

Jeff R. Branick, County Judge

Printed Name & Title

Texas Dept. of Family
and Protective Services

Form 2030CLIVE

Budget for Title IV-E
County Legal Services Contract

Administration
A.1. Direct Personnel Salaries

County: Jefferson
Contract Number: 23939003
Budget Effective Date: 10/1/2017-9/30/2018

Position or Title	A	B	C	D	E	F
	Monthly Salary	% of Time Spent on IV-E Activities	Number of Months of Service	Estimated Total Expense* (AxBxC)	Anticipated Federal Reimbursement (estimated EPR x 50% FFP)	Anticipated County Match
Chief Assistant District Attorney - King	$9,828.82	100%	12	$117,945.84	$22,842.57	$95,103.27
Assistant District Attorney - Nelson	$8,280.07	10%	12	$9,936.08	$1,924.32	$8,011.76
Assistant District Attorney - Nichols	$6,026.77	50%	12	$36,160.62	$7,003.23	$29,157.39
Senior Secretary - Jones	$3,795.67	10%	12	$4,554.80	$882.13	$3,672.68
Senior Secretary - Harrison	$3,763.17	100%	12	$45,158.04	$8,745.76	$36,412.28
Senior Secretary - McGill	$3,600.75	10%	12	$4,320.90	$836.83	$3,484.07
Senior Secretary - Albanese	$3,236.14	50%	12	$19,416.84	$3,760.46	$15,656.38
			Total Direct Personnel Salaries	$237,493.13	$45,995.29	$191,497.83

*estimated total cost for Title IV-E related activities

Note: Please refer to Title IV-E Finance Handbook for detailed information regarding allowable expenses, documentation requirements, etc.
http://www.dfps.state.tx.us/handbooks/Title_IVE_County/default.jsp

Texas Dept. of Family and Protective Services

Budget for Title IV-E
County Legal Services Contract

Form 2030CLIVE

Administration A.2. Direct Personnel Fringe Benefits			
	County:	**Jefferson**	
	Contract Number:	**23939003**	
	Budget Effective Date:	**10/1/2017-9/30/2018**	
Type of Fringe Benefits	**Estimated Total Expense***	**Anticipated Federal Reimbursement (estimated EPR x 50% FFP)**	**Anticipated County Match**
Retirement	$43,176.27	$8,361.95	$34,814.32
FICA	$14,724.60	$2,851.71	$11,872.89
Medicare	$3,443.66	$666.93	$2,776.73
Health Insurance	$42,461.08	$8,223.44	$34,237.64
Life Insurance	$453.47	$87.82	$365.65
Dental Insurance	$777.69	$150.62	$627.07
		$0.00	$0.00
		$0.00	$0.00
		$0.00	$0.00
		$0.00	$0.00
Total Direct Personnel Fringe Benefits	$105,036.77	$20,342.47	$84,694.30

*estimated total cost for Title IV-E related activities

Note: Please refer to Title IV-E Finance Handbook for detailed information regarding allowable expenses, documentation requirements, etc. http://www.dfps.state.tx.us/handbooks/Title_IVE_County/default.jsp

Texas Dept. of Family and Protective Services

Budget for Title IV-E
County Legal Services Contract

Form 2030CLIVE

Administration A.3. Direct Personnel Travel			
	County:	**Jefferson**	
	Contract Number:	**23939003**	
	Budget Effective Date:	**10/1/2017-9/30/2018**	
Type of Travel Expense Note: only include travel NOT related to personnel training	**Estimated Total Expense***	**Anticipated Federal Reimbursement (estimated EPR x 50% FFP)**	**Anticipated County Match**
None anticipated at this time.		$0.00	$0.00
		$0.00	$0.00
		$0.00	$0.00
		$0.00	$0.00
		$0.00	$0.00
		$0.00	$0.00
		$0.00	$0.00
Total Direct Personnel Travel	$0.00	$0.00	$0.00

*estimated total cost for Title IV-E related activities

Note: Please refer to Title IV-E Finance Handbook for detailed information regarding allowable expenses, documentation requirements, etc. http://www.dfps.state.tx.us/handbooks/Title_IVE_County/default.jsp

Please refer to the Texas State Comptroller's office for current mileage rates.
https://fmx.cpa.state.tx.us/fmx/travel/textravel/trans/personal.php

Texas Dept. of Family and Protective Services

Budget for Title IV-E
County Legal Services Contract

Form 2030CLIVE

Administration A.4. Direct Materials and Supplies			
	County:	**Jefferson**	
	Contract Number:	**23939003**	
	Budget Effective Date:	**10/1/2017-9/30/2018**	
Materials and Supplies (description)	**Estimated Total Expense***	**Anticipated Federal Reimbursement (estimated EPR x 50% FFP)**	**Anticipated County Match**
White Mailing Envelopes	$1,000.00	$193.67	$806.33
Green 3" Pressboard Folders (90% IV-E Eligible)	$600.00	$116.20	$483.80
Ink Toner Cartridges for Printers (90% IV-E Eligib	$1,500.00	$290.51	$1,209.50
Sharpie Marks-A-Lot Pens	$40.00	$7.75	$32.25
Post-It Tabs	$150.00	$0.00	$150.00
Scotch Tape	$30.00	$5.81	$24.19
Pens	$10.00	$1.94	$8.06
Total Direct Materials and Supplies	$3,330.00	$615.87	$2,714.13

*estimated total cost for Title IV-E related activities

Note: Please refer to Title IV-E Finance Handbook for detailed information regarding allowable expenses, documentation requirements, etc. http://www.dfps.state.tx.us/handbooks/Title_IVE_County/default.jsp

Texas Dept. of Family and Protective Services

Budget for Title IV-E
County Legal Services Contract

Form 2030CLIVE

Administration
A.5. Direct Equipment

County: **Jefferson**

Contract Number: **23939003**

Budget Effective Date: **10/1/2017-9/30/2018**

Equipment (description)	**Method Used** (rent/lease/ purchase)	**Estimated Total Expense***	**Anticipated Federal Reimbursement (estimated EPR x 50% FFP)**	**Anticipated County Match**
Computer Laser Jet Printer	Purchase	$1,200.00	$232.40	$967.60
Computer Monitor	Purchase	$400.00	$77.47	$322.53
Computer & Accessories with Softw	Purchase	$2,000.00	$387.34	$1,612.66
			$0.00	$0.00
			$0.00	$0.00
			$0.00	$0.00
			$0.00	$0.00
Total Direct Equipment		$3,600.00	$697.21	$2,902.79

*estimated total cost for Title IV-E related activities

Note: Please refer to Title IV-E Finance Handbook for detailed information regarding allowable expenses, documentation requirements, etc. http://www.dfps.state.tx.us/handbooks/Title_IVE_County/default.jsp

Texas Dept. of Family and Protective Services

Budget for Title IV-E
County Legal Services Contract

Form 2030CLIVE

Administration A.6. Direct Other Costs			
	County:	**Jefferson**	
	Contract Number:	**23939003**	
	Budget Effective Date:	**10/1/2017-9/30/2018**	
Other Costs (description)	**Estimated Total Expense***	**Anticipated Federal Reimbursement (estimated EPR x 50% FFP)**	**Anticipated County Match**
Postage Expenses	$24,000.00	$4,648.08	$19,351.92
Software Licenses	$650.00	$125.89	$524.11
		$0.00	$0.00
		$0.00	$0.00
		$0.00	$0.00
Total Direct Other Costs	$24,650.00	$4,773.97	$19,876.03

*estimated total cost for Title IV-E related activities

Note: Please refer to Title IV-E Finance Handbook for detailed information regarding allowable expenses, documentation requirements, etc. http://www.dfps.state.tx.us/handbooks/Title_IVE_County/default.jsp

Texas Dept. of Family and Protective Services

Budget for Title IV-E
County Legal Services Contract

Form 2030CLIVE

B. Training

B.1. Title IV-E Training (75%)

County: Jefferson

Contract Number: 23939003

Budget Effective Date: 10/1/2017-9/30/2018

Training (Description and Title)	Registration* (amount allocable to Title IV-E)	Lodging* (amount allocable to Title IV-E)	Meals* (amount allocable to Title IV-E)	Transportation* (amount allocable to Title IV-E)	Subtotal	Number of Employees Attending	Estimated Total Expense*	Anticipated Federal Reimbursement	Anticipated County Match
NOTE: Form 9321 *Training Expense Documentation Form* must be submitted to DFPS for review/approval by Federal Funds prior to training.									
Crimes Against Children	$1,600.00	$2,000.00	$1,000.00	$1,200.00	$5,800.00	2	$11,600.00	$3,369.86	$8,230.14
TDCAA Conference Update (30% IV-E Eligible)	$1,600.00	$2,000.00	$650.00	$600.00	$4,850.00	2	$9,700.00	$2,817.90	$6,882.10
Texas Advanced Family Law Conference	$900.00	$1,000.00	$450.00	$600.00	$2,950.00	1	$2,950.00	$856.99	$2,093.01
					$0.00		$0.00	$0.00	$0.00
					$0.00		$0.00	$0.00	$0.00
					$0.00		$0.00	$0.00	$0.00
					$0.00		$0.00	$0.00	$0.00
					$0.00		$0.00	$0.00	$0.00
				Total Training			$24,250.00	$7,044.75	$17,205.25

*estimated amount allocable to Title IV-E

Note: Please refer to Title IV-E Finance Handbook for detailed information regarding allowable expenses, documentation requirements, etc. http://www.dfps.state.tx.us/handbooks/Title_IVE_County/default.jsp

Texas Dept. of Family and Protective Services

Budget for Title IV-E
County Legal Services Contract

Form 2030CLIVE

B. Training

B.2. Title IV-E Fostering Connections Training (75%)

County: Jefferson

Contract Number: 23939003

Budget Effective Date: 10/1/2017-9/30/2018

Training (Description and Title)	Registration* (amount allocable to Title IV-E)	Lodging* (amount allocable to Title IV-E)	Meals* (amount allocable to Title IV-E)	Transportation* (amount allocable to Title IV-E)	Subtotal	Number of Employees Attending	Estimated Total Expense*	Anticipated Federal Reimbursement	Anticipated County Match
NOTE: Form 9321 *Training Expense Documentation Form* must be submitted to DFPS for review/approval by Federal Funds prior to training.									
					$0.00		$0.00	$0.00	$0.00
					$0.00		$0.00	$0.00	$0.00
					$0.00		$0.00	$0.00	$0.00
					$0.00		$0.00	$0.00	$0.00
					$0.00		$0.00	$0.00	$0.00
					$0.00		$0.00	$0.00	$0.00
					$0.00		$0.00	$0.00	$0.00
					$0.00		$0.00	$0.00	$0.00
				Total Training			$0.00	$0.00	$0.00

*estimated amount allocable to Title IV-E

Note: Please refer to Title IV-E Finance Handbook for detailed information regarding allowable expenses, documentation requirements, etc.
http://www.dfps.state.tx.us/handbooks/Title_IVE_County/default.jsp

Texas Dept. of Family
and Protective Services

Budget for Title IV-E
County Legal Services Contract

Form 2030CLIVE

B. Training

B.3. Non-Title IV-E Training (50%)

County: Jefferson

Contract Number: 23939003

Budget Effective Date: 10/1/2017-9/30/2018

Training (Description and Title)	Registration* (amount allocable to Title IV-E)	Lodging* (amount allocable to Title IV-E)	Meals* (amount allocable to Title IV-E)	Transportation* (amount allocable to Title IV-E)	Subtotal	Number of Employees Attending	Estimated Total Expense*	Anticipated Federal Reimbursement	Anticipated County Match
NOTE: Form 9321 *Training Expense Documentation Form* must be submitted to DFPS for review/approval by Federal Funds prior to training.									
					$0.00		$0.00	$0.00	$0.00
					$0.00		$0.00	$0.00	$0.00
					$0.00		$0.00	$0.00	$0.00
					$0.00		$0.00	$0.00	$0.00
					$0.00		$0.00	$0.00	$0.00
					$0.00		$0.00	$0.00	$0.00
					$0.00		$0.00	$0.00	$0.00
					$0.00		$0.00	$0.00	$0.00
				Total Training			$0.00	$0.00	$0.00

*estimated amount allocable to Title IV-E

Note: Please refer to Title IV-E Finance Handbook for detailed information regarding allowable expenses, documentation requirements, etc.
http://www.dfps.state.tx.us/handbooks/Title_IVE_County/default.jsp

Texas Dept. of Family and Protective Services

Budget for Title IV-E
County Legal Services Contract

Form 2030CLIVE

Budget Narrative

County:	**Jefferson**
Contract Number:	**23939003**
Budget Effective Date:	**10/1/2017-9/30/2018**

Clearly describe each expense to be incurred and billed to this contract, including justification for expense. Refer to Title IV-E Finance Handbook for detailed information regarding allowable expenses, documentation requirements, etc. http://www.dfps.s

A. Administration

A.1. Direct Personnel Salaries

Chief Assistant District Attorney, Randi King: Ms. King is the chief prosecutor in the family law division. She represents the Texas Department of Family and protective services in cases filed in Jefferson County. Ms. King provides legal advice to the department prior to and throughout legal action, handles the filing of CPS lawsuits ranging from suits affecting parent child relationship to orders to cooperate, and handles court appearances, court preparation, discovery and trials in these cases. Other duties include attending various meetings on CPS related matters and assisting with training. She estimates that approximately 100% of her time is allocable to CPS/Title IV-E activities. She is a full-time salaried employee. She will certify CPS
Assistant District Attorney, John Nelson: Mr. Nelson represents the Texas Department of Family and protective services in cases filed in Jefferson County. Mr. Nelson provides legal advice to the department prior to and throughout legal action, handles the filing of CPS lawsuits ranging from suits affecting parent child relationship to orders to cooperate, and handles court appearances, court preparation, discovery and trials in these cases. Other duties include attending various meetings on CPS related matters and assisting with training. He estimates that approximately 10% of his time is allocable to CPS/Title IV-E activities. He is a full-time salaried employee and will certify CPS related time on a monthly basis.
Assistant District Attorney, Grace Nichols: Ms. Nichols represents the Texas Department of Family and protective services in cases filed in Jefferson County. Ms. Nichols provides legal advice to the department prior to and throughout legal action, handles the filing of CPS lawsuits ranging from suits affecting parent child relationship to orders to cooperate, and handles court appearances, court preparation, discovery and trials in these cases. Other duties include attending various meetings on CPS related matters and assisting with training. She estimates that approximately 50% of time is allocable to CPS/Title IV-E activities. She is a full-time salaried employee and will certify CPS related time on a monthly basis.

Senior Secretary, Beth Jones: Ms. Jones provides clerical assistance to Randi King and Grace Nichols, including activities such as preparing paperwork for the filing of lawsuits, preparing orders, coordinating service of process, providing proper notice to parties, locating witnesses and records, and general paralegal services. She estimates that 10% of her time is allocable to CPS/Title IV-E activities. She is a full-time salaried employee and will certify CPS related time on a monthly basis.

Senior Secretary, Johanna Harrison: Ms. Harrison provides clerical assistance to Ms. King including activities such as preparing paperwork for the filing of lawsuits, preparing orders, coordinating service of process, providing proper notice to parties, locating witnesses and records, and general paralegal services. She estimates that 100% of her time is allocable to CPS/Title IV-E activities. She is a full-time salaried employee and will certify CPS related time on a monthly basis.

Senior Secretary, Chelsea McGill: Ms. McGill provides clerical assistance to Ms. King in addition to when Ms. Harrison including activities such as preparing paperwork for the filing of lawsuits, preparing orders, coordinating service of process, providing proper notice to parties, locating witnesses and records, and general paralegal services. She estimates that 10% of her time is allocable to CPS/Title IV-E activities. She is a full-time salaried employee and will certify CPS related time on a monthly basis.

Senior Secretary, Brittany Albanese: Ms. Albanese provides clerical assistance to Randi King and Michael Morgan, including activities such as preparing paperwork for the filing of lawsuits, preparing orders, coordinating service of process, providing proper notice to parties, locating witnesses and records, and general paralegal services. She estimates that 50% of her time is allocable to CPS/Title IV-E activities. She is a full-time salaried employee and will certify CPS related time on a monthly basis.

A.2. Direct Personnel Fringe Benefits

Fringe benefits consist of all non-salary items that are paid on behalf of employees by the county. Fringe costs are allocated to each employee in accordance with the percentage of time that each employee is allocated to Title IV-E allowable activities.

These benefits are paid at the rates adopted by the Commissioners' Court of the County and consist of:

- FICA at 6.20% of gross salary per month (all employees)
- Medicare at 1.45% of gross salary per month (all employees)
- Retirement at 18.18% of gross salary per month (all employees)
- Health insurance (per *pay period):
  - R. King, B. Jones – Family Coverage at $632.12
  - J. Harrison – Employee & Spouse Coverage at $565.83
  - G. Nichols, J. Nelson, C. McGill, B. Albanese – Single Coverage at $309.97

- Dental insurance at $9.06 per person per *pay period (all employees)
- Life insurance (varies according to age and gross salary) per *pay period:
  - B. Jones – estimated $3.58
  - J. Harrison – estimated $3.58
  - J. Nelson – estimated $7.32
  - G. Nichols – estimated $5.52
  - R. King – estimated $8.13
  - C. McGill – estimated $3.41
  - B. Albanese – estimated $3.09

If, in any event, staff work less than the estimated percentage of time, actual time worked will be billed to the Title IV-E contract. No other direct or indirect expenditures are contained in this budget.

A.3. Direct Personnel Travel

None anticipated at this time.

A.4. Direct Materials and Supplies

- Ink toner used for printing of CPS case documents and communications.
- Folders used to store and file documentation related to CPS cases.
- White envelopes used to send and receive documentation related to CPS cases.
- Sharpie Marks-a-Lot pens for case file paperwork and labeling case files.
- Post-It Tabs for separating documents in case files maintained.
- Scotch tape.
- Pens.

A.5. Direct Equipment

- Monitor to replace obsolete equipment.
- Printer to replace obsolete equipment.
- Computer with Software and Accessories to replace obsolete equipment. Used to prepare documents and send communications regarding CPS cases.

A.6. Direct Other Costs

- Postage expenses for mailing Title IV-E related case materials and correspondence via United States Postal Service and/or overnight carriers. Estimated average of $2,000 per month.
- Software licensing for computer software used to prepare legal documentation for CPS cases.
- Software licensing for computer anti-virus software used to protect all CPS computers.

B. Training

B.1. Title IV-E Training (75%)

Texas Dept. of Family and Protective Services

Budget for Title IV-E
County Legal Services Contract

Form 2030CLIVE

Two employees to attend Crimes Against Children conference. Two employees to attend the Texas District and County Attorneys Association Conference (TDCAA) update. One employee to attend the Texas Advanced Family Law Conference. Conference workshops are related to Title IV-E activities and pre-approval is requested from Federal Funds prior to attendance. Travel reimbursement will be made at current rates approved by Commissioners' Court for travel, per diem, and actual cost for lodging, not to exceed current Texas Comptroller rate plus taxes.

B.2. Title IV-E Fostering Connections Training (75%)

None anticipated at this time.

B.3. Non-Title IV-E Training (50%)

None anticipated at this time.

C. Indirect Costs (if applicable)

None anticipated at this time.

FFATA Certifications

The Federal Funding Accountability and Transparency Act (FFATA) certifications enumerated below represent material facts upon which DFPS relies when reporting information to the federal government required under federal law. If the Department later determines that the Contractor knowingly rendered an erroneous certification, DFPS may pursue all available remedies in accordance with Texas and U.S. law. Signor further agrees that it will provide immediate written notice to DFPS if at any time Signor learns that any of the certifications provided for below were erroneous when submitted or have since become erroneous by reason of changed circumstances. ***If the Signer cannot certify all of the statements contained in this section, Signer must provide written notice to DFPS detailing which of the below statements it cannot certify and why***.

Enter your organization's Dun & Bradstreet (D&B) DUNS Number: **010807535**

Enter the parent DUNS Number, if applicable:

Did your organization have gross income, from all sources, of less than $300,000 in your previous tax year?

Yes ☐ **No** ☒ **N/A** ☐ (if entity does not generate income)

If your answer is **Yes**, skip Parts **A**, **B**, **C**, and **D** and complete Part **E**.

If your answer is **No** or **N/A**, complete Parts **A** and **B**.

Part A. Certification Regarding % of Annual Gross from Federal Awards

Did your organization receive 80% or more of its annual gross income from federal awards in the previous tax year?

Yes ☐ **No** ☒

Part B. Certification Regarding Amount of Annual Gross from Federal Awards

Did your organization receive $25 million or more in annual gross income from federal awards in the previous tax year?

Yes ☐ **No** ☒

If your answer is **Yes** to both **A** and **B**, you must complete Part **C**.

If your answer is **No** to either **A** or **B**, skip Part **C** and go to Part **D**.

Part C. Certification Regarding Public Access to Compensation Information

Does the public have access to information about the compensation [17 CFR 229.402(c)(2)] of the senior executives (e.g., officers, managing partners, or any other employees in management positions) in your business or organization (including parent organization, all branches, and all affiliates worldwide) through periodic reports filed under section 13(a) or 15(d) of the Securities Exchange Act of 1934 (15 U.S.C. 78m(a), 78o(d)) or section 6104 of the Internal Revenue Code of 1986?

Yes ☐ **No** ☐ **N/A** ☐ (if entity reports through some other means, state how:)

If your answer is **Yes**, skip Part **D** and complete Part **E**.

If your answer is **No**, you must provide compensation information to DFPS for FFATA reporting in Part **D**.

If **N/A**, you may still be required to supply compensation information pending DFPS or federal awarding agency approval. Skip Part **D** until requested by DFPS to supply compensation information and proceed to complete Part **E**.

Part D. Certification Regarding Executive Compansation

The Names and Total Compensation of the top five (5) executives if:

- More than 80% of annual gross revenues from the Federal government,
- Those revenues are greater than $25M annually, and
- Compensation information is not already available through reporting to the SEC.

Contractor Executive Names	Total Compensation

Part E. General FFATA Certification

As the duly authorized representative (Signatory) of the Contractor named below, I hereby certify that the responses that I have provided to the questions in this certification form are true, complete and correct to the best of my knowledge.

Jeff R. Branick
Printed Name of Authorized Representative

Signature of Authorized Representative

County Judge
Title of Authorized Representative

Date

Jefferson County
Legal Name of Contractor
(Subawardee Name)

23939003
Contract Number
(Subaward Number)

Beaumont
Primary City
(Subawardee Principal Place of Performance)

Texas
State

77701
9-Character Zip Code
(Zip +4)

This Section For DFPS Use Only

Contract Manager Information

Name Shelia Crocker **Phone** 936-569-5335

Department CPS Regional Contracts **Region** 4/5

Email shelia.crocker@dfps.state.tx.us

This Section For DFPS Use Only (continued)

Federal Funding Agency:			
CFDA Program #:			
Contract Start Date: *(Subaward Obligation/Action Date)*		**Contract End Date:**	
Total Amount of Contract: *(Amount of Subaward)*			
HCATS Subject: *(Program Source)*			
HCATS Purpose: *(Subaward Project Description)*			

TEXAS DEPARTMENT OF FAMILY AND PROTECTIVE SERVICES

COMMISSIONER
H. L. Whitman, Jr.

August 24, 2017

The Honorable Jeff R. Branick
Jefferson County
1149 Pearl Street
Beaumont, Texas 77701

RE: FFY 2018-Title IV-E County Child Welfare Services: Contract #23939002

Dear Judge Branick:

DFPS must maintain up-to-date contract records and is conducting a contract file review that includes the following:

- Risk Analysis: DFPS must ensure that current areas of associated risk to the agency are annually identified and contract monitoring activities appropriately prioritized by level of risk.
- Budget to be used for the new contract period. This may include obtaining and approving a revised budget or confirmation of the continued use of the most current budget.
- Federal Funding Accountability and Transparency Act (FFATA) Certification

The document records that are required to be updated and maintained are attached.

- **Form 9105:** Risk Analysis Questionnaire (RAQ)
    - Complete and return Form 9105. Contract staff must complete an annual risk assessment. The Risk Analysis Questionnaire provides staff with information necessary to perform a current and accurate assessment.

9105_FY18.doc

- **Form 2030:** Budget for Purchase of Service Contracts

2030CWIVEFY18Jeff (002).xls

- **Form 4734:** Federal Funding Accountability and Transparency Act (FFATA) Certification

4734 FFATA
Certification.doc

It is important that you review the enclosed documents thoroughly, sign and return the attached forms to me at the following address:

Email: shelia.crocker@dfps.state.tx.us

If you have any questions regarding the proper completion of the enclosed documents contact me at (936)569-5335.

Please return the applicable forms within two (2) weeks of receiving this correspondence.

Respectfully,

Shelia Crocker

\\: Shelia Crocker
Contract Manager

Enclosures: Forms 9105, 2030, 4734

Texas Dept. of Family and Protective Services

Budget for Title IV-E
County Child Welfare Services Contract

K909-Form 2030CWIVE
July 2017

Summary

County:	**Jefferson**
Contract Number:	**23939002**
Budget Effective Date:	**10/1/2017-9/30/2018**

Cost Category	*Estimated Total Expenses Allocable to Title IV-E*	*Total Anticipated Federal Reimbursement*	*Total Anticipated County Match*
A. Administration			
A.1. Direct Personnel Salaries	$0.00	$0.00	$0.00
A.2. Direct Personnel Fringe Benefits	$0.00	$0.00	$0.00
A.3. Direct Personnel Travel	$0.00	$0.00	$0.00
A.4. Direct Materials and Supplies	$6,000.00	$1,162.02	$4,837.98
A.5. Direct Equipment	$0.00	$0.00	$0.00
A.6. Direct Other Costs	$8,500.00	$1,646.20	$6,853.81
Total Administration	*$14,500.00*	*$2,808.22*	*$11,691.79*
B. Training			
B.1. Title IV-E Training (75%)	$0.00	$0.00	$0.00
B.2. Title IV-E Fostering Connections Training (75%)	$0.00	$0.00	$0.00
B.3. Non-Title IV-E Training (50%)	$0.00	$0.00	$0.00
Total Training	*$0.00*	*$0.00*	*$0.00*
C. Supplemental Foster Care Maintenance (SFCM)			
Total SFCM	*$173,500.00*	*$98,686.80*	*$74,813.20*
D. Indirect Costs (if applicable)			
Indirect Cost Base	*$0.00*	*$0.00*	*$0.00*
Grand Total	**$188,000.00**	**$101,495.02**	**$86,504.99**

***Estimated Federal Reimbursement for expenses based on Eligible Population Rate (EPR) during 3rd quarter of the preceding fiscal year:**	**38.734%**
Actual reimbursement will be based on EPR in effect for the county during the month in which expenses were incurred.	
*** Estimated Federal Reimbursement for Supplemental Foster Care Maintenance expenses based on Federal Medicaid Assistance Percentage (FMAP) rate in effect during preceding fiscal year:**	**56.88%**
Actual reimbursement will be based on FMAP rate in effect at the time reimbursement is made to contractor.	
Indirect Cost Rate, if applicable (attach a copy of the approved Certificate of Indirect Costs):	**0.000%**

Contractor Certification

Signature	***Date***
Jeff Branick, County Judge	
Printed Name & Title	

Texas Dept. of Family
and Protective Services

Form 2030CWIVE

Budget for Title IV-E
County Child Welfare Services Contract

Administration
A.1. Direct Personnel Salaries

County: Jefferson

Contract Number: 23939002

Budget Effective Date: 10/1/2017-9/30/2018

Position or Title	A	B	C	D	E	F
	Monthly Salary	% of Time Spent on IV-E Activities	Number of Months of Service	Estimated Total Expense* (AxBxC)	Anticipated Federal Reimbursement (estimated EPR x 50% FFP)	Anticipated County Match
				$0.00	$0.00	$0.00
				$0.00	$0.00	$0.00
				$0.00	$0.00	$0.00
				$0.00	$0.00	$0.00
				$0.00	$0.00	$0.00
				$0.00	$0.00	$0.00
Total Direct Personnel Salaries				$0.00	$0.00	$0.00

* estimated total cost for Title IV-E related activities

Note: Please refer to Title IV-E Finance Handbook for detailed information regarding allowable expenses, documentation requirements, etc.
http://www.dfps.state.tx.us/handbooks/Title_IVE_County/default.jsp

Texas Dept. of Family
and Protective Services

Form 2030CWIVE

Budget for Title IV-E
County Child Welfare Services Contract

Administration A.2. Direct Personnel Fringe Benefits			
	County:	**Jefferson**	
	Contract Number:	**23939002**	
	Budget Effective Date:	**10/1/2017-9/30/2018**	
Type of Fringe Benefits	**Estimated Total Expense***	**Anticipated Federal Reimbursement (estimated EPR x 50% FFP)**	**Anticipated County Match**
		$0.00	$0.00
		$0.00	$0.00
		$0.00	$0.00
		$0.00	$0.00
		$0.00	$0.00
		$0.00	$0.00
		$0.00	$0.00
		$0.00	$0.00
		$0.00	$0.00
		$0.00	$0.00
Total Direct Personnel Fringe Benefits	$0.00	$0.00	$0.00

* estimated total cost for Title IV-E related activities

Note: Please refer to Title IV-E Finance Handbook for detailed information regarding allowable expenses, documentation requirements, etc.
http://www.dfps.state.tx.us/handbooks/Title_IVE_County/default.jsp

Texas Dept. of Family and Protective Services

Budget for Title IV-E
County Child Welfare Services Contract

Form 2030CWIVE

Administration A.3. Direct Personnel Travel			
	County:	**Jefferson**	
	Contract Number:	**23939002**	
	Budget Effective Date:	**10/1/2017-9/30/2018**	
Type of Travel Expense Note: only include travel NOT related to personnel training	**Estimated Total Expense***	**Anticipated Federal Reimbursement (estimated EPR x 50% FFP)**	**Anticipated County Match**
		$0.00	$0.00
		$0.00	$0.00
		$0.00	$0.00
		$0.00	$0.00
		$0.00	$0.00
		$0.00	$0.00
		$0.00	$0.00
Total Direct Personnel Travel	$0.00	$0.00	$0.00

* estimated total cost for Title IV-E related activities

Note: Please refer to Title IV-E Finance Handbook for detailed information regarding allowable expenses, documentation requirements, etc.
http://www.dfps.state.tx.us/handbooks/Title_IVE_County/default.jsp

Texas Dept. of Family and Protective Services

Budget for Title IV-E
County Child Welfare Services Contract

Form 2030CWIVE

Administration A.4. Direct Materials and Supplies			
	County:	**Jefferson**	
	Contract Number:	**23939002**	
	Budget Effective Date:	**10/1/2017-9/30/2018**	
Materials and Supplies (description)	**Estimated Total Expense***	**Anticipated Federal Reimbursement (estimated EPR x 50% FFP)**	**Anticipated County Match**
Recruitment materials and supplies	$1,000.00	$193.67	$806.33
Overhead expenses	$3,000.00	$581.01	$2,418.99
General office supplies	$2,000.00	$387.34	$1,612.66
		$0.00	$0.00
		$0.00	$0.00
		$0.00	$0.00
Total Direct Materials and Supplies	$6,000.00	$1,162.02	$4,837.98

* estimated total cost for Title IV-E related activities

Note: Please refer to Title IV-E Finance Handbook for detailed information regarding allowable expenses, documentation requirements, etc.
http://www.dfps.state.tx.us/handbooks/Title_IVE_County/default.jsp

Texas Dept. of Family and Protective Services

Budget for Title IV-E
County Child Welfare Services Contract

Form 2030CWIVE

Administration
A.5. Direct Equipment

County: Jefferson

Contract Number: 23939002

Budget Effective Date: 10/1/2017-9/30/2018

Equipment (description)	**Method Used** (rent/lease/ purchase)	**Estimated Total Expense***	**Anticipated Federal Reimbursement (estimated EPR x 50% FFP)**	**Anticipated County Match**
			$0.00	$0.00
			$0.00	$0.00
			$0.00	$0.00
			$0.00	$0.00
			$0.00	$0.00
			$0.00	$0.00
			$0.00	$0.00
Total Direct Equipment		$0.00	$0.00	$0.00

* estimated total cost for Title IV-E related activities

Note: Please refer to Title IV-E Finance Handbook for detailed information regarding allowable expenses, documentation requirements, etc.
http://www.dfps.state.tx.us/handbooks/Title_IVE_County/default.jsp

Texas Dept. of Family and Protective Services

Budget for Title IV-E
County Child Welfare Services Contract

Form 2030CWIVE

Administration A.6. Direct Other Costs			
	County:	**Jefferson**	
	Contract Number:	**23939002**	
	Budget Effective Date:	**10/1/2017-9/30/2018**	
Other Costs (description)	**Estimated Total Expense***	**Anticipated Federal Reimbursement (estimated EPR x 50% FFP)**	**Anticipated County Match**
Storage room rental	$2,500.00	$484.18	$2,015.83
Citations	$1,000.00	$193.67	$806.33
Birth certificates	$2,000.00	$387.34	$1,612.66
Resource books and publications	$2,000.00	$387.34	$1,612.66
Film & Photo Processing & related Costs	$1,000.00	$193.67	$806.33
Total Direct Other Costs	$8,500.00	$1,646.20	$6,853.81

* estimated total cost for Title IV-E related activities

Note: Please refer to Title IV-E Finance Handbook for detailed information regarding allowable expenses, documentation requirements, etc. http://www.dfps.state.tx.us/handbooks/Title_IVE_County/default.jsp

Texas Dept. of Family
and Protective Services

Budget for Title IV-E
County Child Welfare Services Contract

Form 2030CWIVE

B. Training

B.1. Title IV-E Training (75%)

County: **Jefferson**

Contract Number: **23939002**

Budget Effective Date: **10/1/2017-9/30/2018**

Training (Description and Title)	**Registration*** (amount allocable to Title IV-E)	**Lodging*** (amount allocable to Title IV-E)	**Meals*** (amount allocable to Title IV-E)	**Transportation** (amount allocable to Title IV-E)	**Subtotal**	**Number of Employees Attending**	**Estimated Total Expense***	**Anticipated Federal Reimbursement** (estimated EPR x 75% FFP)	**Anticipated County Match**
NOTE: Form 9321 *Training Expense Documentation Form* must be submitted to DFPS for review/approval by Federal Funds prior to training.									
None anticipated at this time					$0.00		$0.00	$0.00	$0.00
					$0.00		$0.00	$0.00	$0.00
					$0.00		$0.00	$0.00	$0.00
					$0.00		$0.00	$0.00	$0.00
					$0.00		$0.00	$0.00	$0.00
					$0.00		$0.00	$0.00	$0.00
					$0.00		$0.00	$0.00	$0.00
					$0.00		$0.00	$0.00	$0.00
				Total Training			$0.00	$0.00	$0.00

* estimated amount allocable to Title IV-E

Note: Please refer to Title IV-E Finance Handbook for detailed information regarding allowable expenses, documentation requirements, etc. http://www.dfps.state.tx.us/handbooks/Title_IVE_County/default.jsp

Texas Dept. of Family
and Protective Services

Budget for Title IV-E
County Child Welfare Services Contract

Form 2030CWIVE

B. Training

B.2. Title IV-E Fostering Connections Training (75%)

County: Jefferson

Contract Number: 23939002

Budget Effective Date: 10/1/2017-9/30/2018

Training (Description and Title)	**Registration*** (amount allocable to Title IV-E)	**Lodging*** (amount allocable to Title IV-E)	**Meals*** (amount allocable to Title IV-E)	**Transportation*** (amount allocable to Title IV-E)	**Subtotal**	**Number of Attendees**	**Estimated Total Expense***	**Anticipated Federal Reimbursement** (estimated EPR x 75% FFP)	**Anticipated County Match**
NOTE: Form 9321 *Training Expense Documentation Form* must be submitted to DFPS for review/approval by Federal Funds prior to training.									
					$0.00		$0.00	$0.00	$0.00
					$0.00		$0.00	$0.00	$0.00
					$0.00		$0.00	$0.00	$0.00
					$0.00		$0.00	$0.00	$0.00
					$0.00		$0.00	$0.00	$0.00
					$0.00		$0.00	$0.00	$0.00
					$0.00		$0.00	$0.00	$0.00
					$0.00		$0.00	$0.00	$0.00
Total Training							$0.00	$0.00	$0.00

* estimated amount allocable to Title IV-E

Note: Please refer to Title IV-E Finance Handbook for detailed information regarding allowable expenses, documentation requirements, etc. http://www.dfps.state.tx.us/handbooks/Title_IVE_County/default.jsp

Texas Dept. of Family
and Protective Services

Budget for Title IV-E
County Child Welfare Services Contract

Form 2030CWIVE

B. Training

B.3. Non-Title IV-E Training (50%)

County: Jefferson

Contract Number: 23939002

Budget Effective Date: 10/1/2017-9/30/2018

Training (Description and Title)	**Registration*** (amount allocable to Title IV-E)	**Lodging*** (amount allocable to Title IV-E)	**Meals*** (amount allocable to Title IV-E)	**Transportation*** (amount allocable to Title IV-E)	**Subtotal**	**Number of Employees Attending**	**Estimated Total Expense***	**Anticipated Federal Reimbursement** (estimated EPR x 50% FFP)	**Anticipated County Match**
NOTE: Form 9321 *Training Expense Documentation Form* must be submitted to DFPS for review/approval by Federal Funds prior to training.									
					$0.00		$0.00	$0.00	$0.00
					$0.00		$0.00	$0.00	$0.00
					$0.00		$0.00	$0.00	$0.00
					$0.00		$0.00	$0.00	$0.00
					$0.00		$0.00	$0.00	$0.00
					$0.00		$0.00	$0.00	$0.00
					$0.00		$0.00	$0.00	$0.00
					$0.00		$0.00	$0.00	$0.00
				Total Training			$0.00	$0.00	$0.00

* estimated amount allocable to Title IV-E

Note: Please refer to Title IV-E Finance Handbook for detailed information regarding allowable expenses, documentation requirements, etc. http://www.dfps.state.tx.us/handbooks/Title_IVE_County/default.jsp

Texas Dept. of Family and Protective Services

Budget for Title IV-E
County Child Welfare Services Contract

Form 2030CWIVE

C. Supplemental Foster Care Maintenance (SFCM)			
	County:	**Jefferson**	
	Contract Number:	**23939002**	
	Budget Effective Date:	**10/1/2017-9/30/2018**	
Other Costs (description)	**Estimated Total Expense***	**Anticipated Federal Reimbursement (estimated FMAP)**	**Anticipated County Match**
Allowances	$10,000.00	$5,688.00	$4,312.00
Clothing	$120,000.00	$68,256.00	$51,744.00
Daycare	$1,000.00	$568.80	$431.20
Gifts	$30,000.00	$17,064.00	$12,936.00
Graduation Expenses	$2,500.00	$1,422.00	$1,078.00
Personal Items	$7,000.00	$3,981.60	$3,018.40
School Supplies	$2,000.00	$1,137.60	$862.40
Reasonable Child Specific Travel	$1,000.00	$568.80	$431.20
Total Direct Other Costs	$173,500.00	$98,686.80	$74,813.20

* estimated total cost for Title IV-E related activities

Note: Please refer to Title IV-E Finance Handbook for detailed information regarding allowable expenses, documentation requirements, etc. http://www.dfps.state.tx.us/handbooks/Title_IVE_County/default.jsp

Texas Dept. of Family
and Protective Services

Budget for Title IV-E
County Child Welfare Services Contract

Form 2030CWIVE

Budget Narrative

County:	**Jefferson**
Contract Number:	**23939002**
Budget Effective Date:	**10/1/2017-9/30/2018**

Clearly describe each expense to be incurred and billed to this contract. Refer to Title IV-E Finance Handbook for detailed information regarding allowable expenses, documentation requirements, etc. http://www.dfps.state.tx.us/handbooks/Title_IVE_County

A. Administration

A.1. Direct Personnel Salaries

A.2. Direct Personnel Fringe Benefits

A.3. Direct Personnel Travel

A.4. Direct Materials and Supplies
Includes supplies for recruitment of foster home; public/community awareness expenses related to recruitment of foster homes; office supplies for record keeping and DFPS files; and overhead expenses including, but not limited to, stationery, postage, and banking expenses.

A.5. Direct Equipment

A.6. Direct Other Costs
Includes citation by publication, costs of documentation to establish identity; resource books and publications for DFPS eligibility and guidelines; film for documentation and records of DFPS cases; and storage room rental to store supplies for Title IV-E events and children.

B. Training

B.1. Title IV-E Training (75%)
None anticipated at this time.

B.2. Title IV-E Fostering Connections Training (75%)

B.3. Non-Title IV-E Training (50%)

C. Supplemental Foster Care Maintenance (SFCM)
Includes allowances, clothing, daycare, gifts, graduation expenses, personal items, school supplies, and reasonable travel provided for the child to visit parents, siblings, relatives, or other caretakers at home or other appropriate location.

D. Indirect Costs (if applicable)

Fran Lee

From: Loma George <george@co.jefferson.tx.us>
Sent: Thursday, August 24, 2017 3:49 PM
To: 'Patrick Swain'
Cc: 'Fran Lee'
Subject: FW: Agenda Item

Loma George
Administrative Aide to County Judge Jeff R. Branick
Phone: (409) 835-8466
Fax: (409) 839-2311
Email: george@co.jefferson.tx.us

From: Michael Sinegal [mailto:msinegal@co.jefferson.tx.us]
Sent: Thursday, August 24, 2017 2:53 PM
To: george@co.jefferson.tx.us
Subject: Agenda Item

Consider and approve budget amendment-Port Arthur Maintenance transfer of Utility Maintenance worker position from Port Arthur Maintenance to Road & Bridge, Precinct 3 Department effective September 3, 2017

2014. 120-6084-416-1072 MAINTENANCECREW $6,500.00
120-6084-416-2001 F.I.C.A.EXPENSE $510.00
120-6084-416-2002 EMPLOYEES'RETIREMENT $985.00
120-6084-416-2007 CELLULARPHONEALLOWANCE $150.00
113-0302-431-1028 LABORERS $6,500.00
113-0302-431-2001 F.I.C.A.EXPENSE $510.00
113-0302-431-2002 EMPLOYEES'RETIREMENT $985.00
113-0301-431-2007 CELLULARPHONEALLOWANCE $150.00

10-72 2,613.56
10-94 9.39
20-01 178.10 + 5.74 = 183.84
20-02 452.76 + 12.90 = 465.66
20-03 525.14
20-07 75.00

Resolution

STATE OF TEXAS §
§
COUNTY OF JEFFERSON §

COMMISSIONER'S COURT

OF JEFFERSON COUNTY, TEXAS

BE IT REMEMBERED at a meeting of Commissioner's Court of Jefferson County, Texas, held on the 28th day of August, 2017, on motion made by Michael Shane Sinegal, Commissioner of Precinct No. 3, and seconded by Eddie Arnold, Commissioner of Precinct No. 1, the following resolution was adopted:

WHEREAS, **BARBARA JAMES** has devoted 17 years and 6 months of her life to serving the people of Jefferson County with pride and professionalism; and

WHEREAS, **BARBARA JAMES** began her career with Jefferson County in the County Clerk's office on February 7, 2000, as a Deputy County Clerk in the Filing department, and has gained knowledge and experience throughout her tenure; and

WHEREAS, **BARBARA JAMES** has served under three Honorable County Clerks: Sandy Walker, Debbie Usoff, and Carolyn L. Guidry; and

WHEREAS, **BARBARA JAMES,** known for her high standards of professionalism and personal integrity, won the respect of her colleagues, customers, and other county employees; and

WHEREAS, **BARBARA JAMES**, a devoted mother and grandmother, will be enjoying her family, friends, and travel in her retirement; and

WHEREAS, having made a significant contribution to the Jefferson County Clerk's Office, **BARBARA JAMES** is recognized for her unselfish devotion to the common good and welfare of the citizens of Jefferson County and will be missed by her friends and co-workers; and

NOW THEREFORE, **BE IT RESOLVED** that the Commissioner's Court of Jefferson County, Texas, does hereby honor and commend **BARBARA JAMES** for her dedicated service as an employee of Jefferson County and wishes her well in her retirement.

SIGNED this 28th of August, 2017.

Jeff Branick, County Judge

Eddie Arnold, Commissioner, Pct. 1

Michael Sinegal, Commissioner, Pct. 3

Brent Weaver, Commissioner, Pct. 2

Everette Alfred, Commissioner, Pct. 4

Jefferson County Clerk
Proposed Records Archive Plan
For Fiscal Year 2017-2018

In accordance with Local Government Code Sec. 118.025, the Jefferson County Clerk, Carolyn L. Guidry, proposes the following expenditures be made from funds collected under this section by imposition of a "Records Archive" fee which was adopted by the Jefferson County Commissioners' Court on August 4, 2003 and which was effective September 1, 2003:

Contractual Preservation Project *(Preservation, Restoration, and Imaging of Records created before 1990 – Outsource via RFP specs*	$ 200,000.00
Stationery & Office Supplies *(Microfilm Supplies, Barcode labels, Scanner consumables, and other supplies used in the Preservation and Restoration of Records filed before 1990)*	$ 6,000.00
Salaries-Deputy County Clerks *(Education Pay and Overtime allowance for Deputies working on the Preservation and Restoration of the County Clerk's Records Archive)*	$ 9,000.00
Extra Help *(Salaries for temporary/part-time extra help to work on the Preservation and Restoration of the County Clerk's Records Archive)*	$ 45,000.00
Fringe Benefits	$ 13,948.00
Total Proposed Expenditures	**$273,948.00**

NOTICE OF EARLY VOTING LOCATIONS AND HOURS FOR
November 7, 2017, GENERAL ELECTION
(Advicode Locales y horarioparaelecci'onsadelantadasde
Noviembre 7, 2017 Eleci'on Generale

Early Voting by personal appearance will be conducted each weekday at:
(La votación adelantada en persona se llevará a cabo de lunes a viernes en:)

EARLY VOTING LOCATIONS:
(Localizaciones de Votacion Adelantada):

Beaumont Courthouse Main -		1001 Pearl St., Beaumont, Texas
Rogers Park Recreation Center -		6540 Gladys, Beaumont, Texas
Port Arthur Public Library	-	4615 Ninth Ave, Port Arthur, Texas
Theodore Johns Library	-	4255 Fannett Rd., Beaumont, Texas
Effie & Wilton Hebert Library	-	2025 Merriman St., Port Neches, Texas

DATES AND HOURS FOR ALL ABOVE LOCATIONS:
(Fechas y Horas para todas las localizaciones):

October 23 - 27 *(Octobre 20 - 24)*	Monday - Friday *(Lunes -Viernes)*	8:00 a.m. - 5:00 p.m.
October 28 *(Octobre 25)*	Saturday *(Sábado)*	8:00 a.m. - 5:00 p.m.
October 30 - 31 *(Octobre 27-31)*	Monday – Tuesday *(Lunes – Martes)*	8:00 a.m. - 5:00 p.m.
November 1 *(Noviembre 1)*	Wednesday *(Miércoles)*	8:00 a.m. - 5:00 p.m.
November 2 – 3 (Noviembre 2 – 3)	Thursday – Friday (Jueves- Viernes)	7:00 a.m. – 7:00 p.m.

DATES AND HOURS FOR LOCATION BELOW:
(Fechas y Horas para todas las localizaciones):

R.L. Gabby Recreation Center — 5262 S Gulfway Dr. , Sabine Pass, Texas

November 2 – 3 *(Noviembre 2 – 3)*	Thursday – Friday (Jueves- Viernes)	7:00 a.m. – 7:00 p.m.

Precincts (precintos)	Election Day Polling Places (Localizaciones)	ADDRESS (Dirección)	City, State Zip code
ALL (todos)	Amelia Elementary School	565 S. Major Dr	Beaumont, TX 77707
ALL (todos)	Beaumont Municipal Airport	455 Keith Rd.	Beaumont, TX 77713
ALL (todos)	Bevil Oaks Civic Center	7390 Sweetgum Rd.	Bevil Oaks, TX 77713
ALL (todos)	BISD Administration Building	3395 Harrison Ave.	Beaumont, TX 77706
ALL (todos)	Calvary Baptist Church	3650 Dowlen Rd.	Beaumont, TX 77706
ALL (todos)	Dishman Elementary	3475 Champions Dr.	Beaumont, TX 77707
ALL (todos)	O.C. Mike Taylor Career Center	2330 North St.	Beaumont, TX 77702
ALL (todos)	Precinct 1 Service Center	20205 W. Hwy. 90	China, TX 77613
ALL (todos)	Rogers Park Community Center	6540 Gladys Ave.	Beaumont, TX 77706
ALL (todos)	Roy Guess Elementary	8055 Voth Rd.	Beaumont, TX 77708
ALL (todos)	Hebert Library	2025 Merriman St.	Port Neches, TX 77651
ALL (todos)	Central Gardens Fire Station**	2026 Spurlock Rd.	Nederland, TX 77627
ALL (todos)	Groves Public Library **	5600 West Washington	Groves, TX 77619
ALL (todos)	Nederland City Hall	207 N. 12th Street	Nederland, TX 77627
ALL (todos)	Jerry Ware Airport Terminal	5000 Jerry Ware Dr.	Beaumont, TX 77705
ALL (todos)	JP 4 BLDG	19217 FM 365	Beaumont, TX 77704
ALL (todos)	Jefferson County ESD #4	12880 FM 365	Beaumont, TX 77705
ALL (todos)	Marion & Ed Hughes Public Library	2712 Nederland Ave.	Nederland, TX 77627
ALL (todos)	Port Neches City Hall	1005 Merriman	Port Neches, TX 77651
ALL (todos)	Groves Activity Building **	6150 39th Street.	Groves, TX 77619
ALL (todos)	DeQueen Elementary	740 DeQueen Blvd.	Port Arthur, TX 77640
ALL (todos)	El Vista Community Center	615 Ellias St.	Port Arthur, TX 77640
ALL (todos)	Jefferson County Sub-Courthouse	525 Lakeshore Dr.	Port Arthur, TX 77640
ALL (todos)	Memorial 9th Grade Academy	2441 61st St.	Port Arthur, TX 77642
ALL (todos)	O W COLLINS RETIREMENT CENTER	4440 GULFWAY DR.	Port Arthur, TX 77642
ALL (todos)	Port Arthur Public Library	4615 9th Ave.	Port Arthur, TX 77642
ALL (todos)	Port Arthur Recreation Center	1308 9th Ave.	Port Arthur, TX 77642
ALL (todos)	R.L. Gabby Eldridge Center	5262 S. Gulfway Dr	Sabine Pass, TX 77655
ALL (todos)	Travis Elementary	1115 Lakeview Ave.	Port Arthur, TX 77642
ALL (todos)	Willie Ryman III Community Center	3248 39th St.	Port Arthur, TX 77642
ALL (todos)	Alice Keith Park Recreation Center	4075 Highland Ave.	Beaumont, TX 77705
ALL (todos)	Charlton-Pollard Elementary	825 Jackson St.	Beaumont, TX 77701
ALL (todos)	Dr. Mae Jones-Clark Elementary	3525 Cleveland St.	Beaumont, TX 77703
ALL (todos)	Hamshire Community Building	12393 2nd St.	Hamshire, TX 77622
ALL (todos)	Jefferson County Courthouse	1001 Pearl St.	Beaumont, TX 77701
ALL (todos)	MLK Middle School	1400 Avenue A	Beaumont, TX 77701
ALL (todos)	John Paul Davis Community Center	3580 E. Lucas Dr.	Beaumont, TX 77703
ALL (todos)	Precinct 4 Service Center	7780 Boyt Rd.	Beaumont, TX 77713
ALL (todos)	Sterling Pruitt Center	2930 Gulf St.	Beaumont, TX 77703
ALL (todos)	Theodore Johns Library	4255 Fannett Rd.	Beaumont, TX 77705
	**Location Change		

PROCLAMATION

STATE OF TEXAS	§	COMMISSIONERS COURT
	§	
COUNTY OF JEFFERSON	§	OF JEFFERSON COUNTY, TEXAS

BE IT REMEMBERED at a meeting of Commissioners' Court of Jefferson County, Texas, held on the _____ day of _____, 2017, on motion made by _____, Commissioner of Precinct No. ____, and seconded by _____, Commissioner of Precinct No. ____, the following Proclamation was adopted:

Suicide Prevention Month 2017

WHEREAS, in the United States, more than 40,000 people commit suicide every year; and

WHEREAS, in our country, suicide is the 10th leading cause of death; and

WHEREAS, community organizations and resources are essential to continuing the fight against suicide and the loss of young lives; and

WHEREAS, reducing the stigma by discussing suicide and increasing the awareness of available resources for those suffering from suicidal thoughts is important to maintaining the health and happiness of citizens; and

WHEREAS, many of those people who died never received effective behavioral health services, for many reasons including the difficulty of accessing services by healthcare providers trained in best practices to reduce suicide risk, the stigma of using behavioral health treatment and the stigma associated with losing a loved one to suicide; and

WHEREAS, public awareness of the warnings signs and the networks available for at-risk individuals, are essential to continue lowering the rates of suicide in the country; and

WHEREAS, reducing the stigma by discussing suicide and increasing the awareness of available resources for those suffering from suicidal thoughts is important to maintaining the health and happiness of citizens;

NOW, THEREFORE, BE IT RESOLVED that the Jefferson County Commissioners Court recognizes **September 2017 as National Suicide Prevention Month** and calls upon all citizens of Jefferson County to observe this month with appropriate programs and activities to support suicide prevention efforts.

Signed this _____day of _____2017.

_____
JUDGE JEFF R. BRANICK
County Judge

_____
COMMISSIONER EDDIE ARNOLD
Precinct No. 1

_____
COMMISSIONER MICHAEL S. SINEGAL
Precinct No. 3

_____
COMMISSIONER BRENT A. WEAVER
Precinct No. 2

_____
COMMISSIONER EVERETTE D. ALFRED
Precinct No. 4

Resolution

STATE OF TEXAS §
§ COMMISSIONERS COURT
COUNTY OF JEFFERSON § OF JEFFERSON COUNTY, TEXAS

BE IT REMEMBERED at a meeting of Commissioners' Court of Jefferson County, Texas, held on the 28th day of August, 2017, on motion made by _____, Commissioner of Precinct No. ____, and seconded by _____, Commissioner of Precinct No. ____, the following Resolution was adopted:

WHEREAS, Patricia Nantz, started her career with Jefferson County Road & Bridge Precinct 1 in 1997 devoting 20 years of her life serving the people of Jefferson County with pride and professionalism; and,

WHEREAS, Patricia Nantz has dedicated her talents and valuable services as an Administrative Assistant serving her first 8 years with Commissioner Jimmie Cokinos and her remaining 12 years with Eddie Arnold, Commissioner of Jefferson County Road & Bridge Precinct 1; and,

WHEREAS, Patricia Nantz, known for her high standards of professionalism and personal integrity, Patricia won the respect of her colleagues, elected officials and other county employees; and,

WHEREAS, having made a significant contribution to the Jefferson County Road & Bridge Precinct 1 department Patricia Nantz, is recognized for her unselfish devotion to the common good and welfare of the citizens of Jefferson County; and will be missed by her friends and co-workers.

NOW, THEREFORE, BE IT RESOLVED that the Commissioners' Court of Jefferson County, Texas does hereby honor and commend Patricia Nantz for her dedicated service as a valuable employee of Jefferson County and wishes her well in retirement.

SIGNED this 28th day of August, 2017

_____
JUDGE JEFF R. BRANICK
County Judge

_____
COMMISSIONER EDDIE ARNOLD
Precinct No. 1

_____
COMMISSIONER MICHAEL S. SINEGAL
Precinct No. 3

_____
COMMISSIONER BRENT A. WEAVER
Precinct No. 2

_____
COMMISSIONER EVERETTE D. ALFRED
Precinct No. 4

AGENDA ITEM **August 28, 2017**

Consider, possibly approve and authorize the County Judge to order to extend and renew the Declaration of Disaster entered on August 24, 2017 for Tropical Depression/Hurricane Harvey pursuant to Section 418.108, Local Government Code.

JEFF R. BRANICK
County Judge

Jefferson County Courthouse
P.O. Box 4025
Beaumont, TX 77704

Beaumont (409) 835-8466
Pt. Arthur (409) 727-2191 Ext. 8466
Facsimile (409) 839-2311

RENEWAL AND EXTENSION OF JEFFERSON COUNTY, TEXAS DECLARATION OF DISASTER

WHEREAS, the County of Jefferson on the day of August ____, 2017, has suffered extensive and severe damage, injury, loss of life and property resulting from Tropical Depression/ Hurricane Harvey;

WHEREAS, the Judge of Jefferson County has determined that extraordinary measures must be taken to alleviate the suffering of people and to protect or rehabilitate property;

WHEREAS, A Declaration of Disaster was entered on August _____, 2017 pursuant to Section 418.108, Local Government Code and same must be renewed and extended;

NOW, THEREFORE, BE IT PROCLAIMED BY THE COUNTY JUDGE OF JEFFERSON COUNTY, TEXAS, PURSUANT TO RESOLUTION OF THE COMMISSIONER'S COURT, THAT:

1. A local state of disaster which was declared for the County of Jefferson on August _____, 2017, pursuant to Section 418.018(f) of the Texas Local Government Code, is continued because of prevailing conditions, and because that Declaration of State of Disaster must be renewed and extended;
2. The provisions of that Declaration of State of Disaster will continue and remain in full force and effect until further orders of this Court.

ORDERED this the ____day of_____, 2017 at_____o'clock __m.

_____
JEFF R. BRANICK, COUNTY JUDGE
JEFFERSON COUNTY, TEXAS

AGENDA ITEM **August 28, 2017**

Consider, possibly approve, authorize the County Judge to execute Property Tax Abatement between Coastal Caverns I, L.P. and Jefferson County for Property located within the Coastal Caverns Reinvestment Zone pursuant to Section 312.401, Texas Tax Code. (**Phase 1 & 2)**

STATE OF TEXAS §
§
COUNTY OF JEFFERSON §

ABATEMENT AGREEMENT FOR PROPERTY LOCATED IN THE COASTAL CAVERNS REINVESTMENT ZONE

Pursuant to Section 312.401 of the Texas Tax Code, this Tax Abatement Agreement (hereinafter referred to as the "AGREEMENT") is made and entered into by and between Jefferson County (hereinafter sometimes referred to as "the COUNTY"), and Coastal Caverns 1, L.P. (hereinafter sometimes referred to as "COASTAL" OR "OWNER").

1. RECITALS

WHEREAS, OWNER possesses interests in taxable real property located within the Coastal Caverns Reinvestment Zone, the designation of which was implemented by the COUNTY by an Order dated August 7, 2017 (hereinafter referred to as the "REINVESTMENT ZONE"

WHEREAS, this AGREEMENT is limited to the project to be constructed by OWNER, on various parcels of land located within the Reinvestment Zone, which is described with particularity in Exhibit "A" attached hereto and which will involve construction of surface facilities and construction of new and expansion of existing underground hydrocarbon storage facilities and related improvements (Phase One of the contemplated project, which includes Cavern 1, and Phase Two of the contemplated project, which includes Caverns 2 and 3), hereinafter referred to as the "PROJECT"); and

WHEREAS the COUNTY wishes to encourage OWNER to select Jefferson County as the site for the PROJECT; and

WHEREAS, the REINVESTMENT ZONE is an area within Jefferson County, Texas, generally described as being within the Coastal Caverns Reinvestment Zone, which has been designated by Order of this Court, the legal description for which is attached hereto as Exhibit "C." It is understood and agreed that the Reinvestment Zone boundary is subject to revision based on the final construction plan of the Project, and the County agrees to take the steps necessary to amend the Reinvestment Zone boundary upon request of Company.

NOW, THEREFORE, for the mutual consideration set forth below, the Parties hereto agree as follows:

2. AUTHORIZATION

THIS AGREEMENT IS AUTHORIZED BY THE TEXAS PROPERTY REDEVELOPMENT AND TAX ABATEMENT ACT, TEX. TAX CODE CHAPTER 312, AS AMENDED, AND BY ORDER OF THE JEFFERSON COUNTY COMMISSIONERS COURT ESTABLISHING THE COASTAL CAVERNS REINVESTMENT ZONE, WHICH ADOPTED THE COASTAL CAVERNS REINVESTMENT ZONE.

3. DEFINITIONS

For purposes of this AGREEMENT, the following terms shall have the meanings set forth below:

"Abatement" means the full or partial exemption from ad valorem taxes of the value of certain property located in the REINVESTMENT ZONE designated for economic development purposes.

"Affiliate**"** of any specified person or entity means any other person or entity which, directly or indirectly, through one or more intermediaries, controls, or is controlled by, or is under common control with such specified person or entity. For purposes of this definition, the term "control" (including the terms "controlled by" and "under common control with") means the possession, directly or indirectly, of the power to direct or cause the direction of the management and policies of such person or entity, whether through the ownership of voting securities, by contract or otherwise.

"Base Year Value**"** means the taxable value of all industrial realty improvements owned by the property owner and/or its Affiliates within Jefferson County on January 1 preceding the execution of the abatement agreement. Owner will, in consultation with the Jefferson County Appraisal District, provide the County with a list of the Jefferson County Appraisal District account numbers identifying the industrial realty improvements owned by the property owner and/or its Affiliates and the taxable value thereof on January 1 preceding the execution of the abatement agreement for use in preparing the schedule to be attached as an exhibit to the abatement agreement before execution specifying the Base Year Value for all purposes of the abatement agreement.

"Base year", for the parties to this agreement, is defined as the calendar year in which this abatement contract is executed (signed) by all parties hereto.

"Ineligible Property" is fully taxable and ineligible for tax abatement and includes land, supplies, inventory, housing, vehicles, improvements for the generation or transmission of electrical energy not wholly consumed by a new facility or expansion; any improvements, including those to produce, store or distribute natural gas, fluids or gasses, which are not integral to the operation of the facility; deferred maintenance, property to be rented or leased, property which has a productive life of less than ten years, or any other property for which abatement is not allowed by state law.

"Eligible Property" means the realty improvements, the on-site buildings, structures, fixed machinery and equipment, storage tanks, process units (including all integral components necessary for operations), site improvements, and infrastructure and the permanent office space and related fixed improvements, as defined by the Tax Code but does not include personal tangible property.

"New Eligible Property" means Eligible Property, the construction of which commences subsequent to the effective date of this AGREEMENT. During the construction phase of the New Eligible Property, the OWNER may make such change orders to the New Eligible Property as are reasonably necessary to accomplish its intended use. It is expressly understood that, notwithstanding anything to the contrary written herein, energy, electricity, manufacturing supplies (e.g. foreign manufactured catalysts), feedstocks, freight, and direct materials that physically become a part of the end product manufactured by the PROJECT) are not subject to the terms of this AGREEMENT.

"Taxable Value" for each taxing entity executing an abatement agreement is determined by deducting from the Market Value of all industrial realty improvements of a property owner and/or its affiliates the amount of any applicable exemptions and abatements granted for that Tax Year.

The maximum dollar value for equipment that OWNER intends to claim to the TCEQ as exempt from taxation is fifteen percent (15%) of cost ("Intended Maximum"), though that number could change as current estimated project costs are refined. It is understood that the COUNTY would not have agreed to this abatement percentages if it were known that the actual exempt property claimed by OWNER would exceed the Intended Maximum. In the event OWNER ultimately claims an amount in excess of the Intended Maximum (such amount the "Exempt Property Excess"), the percentage of abatement described in the "Abatement Schedule" shall be reduced pro rata so as to reimburse the COUNTY for the total decrease in County tax revenue during the abatement period beginning on January 1, 2019 which is expected to result from the Exempt Property Excess. It is understood and agreed that OWNER will not seek a tax exemption for any equipment or portion of the facility which merely reduces the pollution characteristics of the finished product produced by the facility and that an exemption will only be sought for equipment and technology utilized to reduce pollution at or around the facility.

"Completion" as used herein, shall mean, the successful commissioning of the PROJECT and the attainment of reliable operations. OWNER shall certify in writing to the COUNTY when such Completion is attained.

"Full-time job", as used herein, shall mean a permanent full-time position that: requires at least 1,600 hours or work per year, is not a transferred from another area of the state, is not created to replace a previous employee, and is covered by a group health benefit plan, and pays at least 110% of the county average weekly wage for manufacturing jobs in Jefferson County.

"Payment in Lieu of Taxes" If, during the period of this abatement, any Federal or State law provides an additional tax exemption for the property that is already the subject of this agreement, Applicant agrees to decline that tax exemption during the period of this abatement. If Applicant is unable to decline that tax exemption, Applicant agrees to pay the taxes, or payment in lieu of taxes, on the reduction of property tax revenue to the County that is the result of said exemption. Any payment in lieu of taxes shall be due on or before November 15 of the year in which payment is due.

4. TERM OF ABATEMENT

This AGREEMENT shall be effective and enforceable upon execution by both parties (which date is herein referred to as the "Effective Date"). The Term of the Abatement pursuant to this AGREEMENT shall begin on January 1, 2019 and shall terminate on December 31, 2026 unless sooner terminated pursuant to other provisions of this AGREEMENT. Should OWNER not begin the construction of the PROJECT by December 31, 2018, this AGREEMENT shall be null and void.

5. OWNER REPRESENTATIONS/OBLIGATIONS

In order to receive a tax abatement with respect to a tax year listed on the Tax Abatement Schedule (EXHIBIT "A"), OWNER shall comply with the following:

a. As a result of the PROJECT, and upon its Completion (currently estimated to be not later than:

the first quarter, 2019, maintain a level of not less than twenty (20) new full-time jobs, using headcount as of June 30, 2017 as the starting point, relating to the PROJECT during the remaining term of this AGREEMENT; provided, however that OWNER may reduce employment levels due to improved efficiencies or changing economic conditions during the term of this AGREEMENT as long as such employment levels do not fall below 20 full-time jobs for total on site employment by owner during said term. In the event that such employment falls below 20 full-time jobs for total on site employment, Abatement shall be reduced proportionate to such employment decline beginning with the tax year in which the decline occurs and each tax year thereafter per the example calculation cited below where:

A1 = initial Abatement $s
A2 = revised Abatement $s
E1 = 20 full-time jobs
E2 = revised employee count

$$A2 = A1 \times (E2/E1)$$

b. Report and certify the requisite job levels to the COUNTY, annually during each tax year under this AGREEMENT;

c. Construct the PROJECT with an estimated investment in excess of $111,000,000;

d. Make available to the COUNTY information concerning the details of contractor bids, every quarter, during the construction phase of the PROJECT under the express understanding that COMPANY is providing the COUNTY such contractor bid information on a strictly confidential basis so as to maintain the integrity of the competitive bid process;

e. Report and certify to the COUNTY the requisite cost of the PROJECT within 120 days after the completion of the PROJECT (or 120 days after the Effective Date, whichever is later);

f. Ensure that qualified local labor, vendors, suppliers, and sub-contractors are given a timely opportunity to bid on contracts for the provision of supplies, goods and services (including engineering and construction services, *e.g.*, piping, electrical, civil, fabrication) in connection with construction of the PROJECT and any turnaround project which is undertaken as part of or in connection with the PROJECT during the term of the abatement period. Such consideration shall be made in good faith without discrimination. For purposes of the foregoing:

(i) "Local labor" is defined as those qualified laborers or craftsmen who are residents and domiciliaries of the nine county regions comprised of Jefferson, Orange, Hardin, Jasper, Newton, Liberty, Tyler and Chambers Counties, as well as the Bolivar Peninsula area of Galveston County. "Local vendors" and "local suppliers" shall include only those located or having a principal office in Jefferson County. "Local subcontractors" shall include only those located or having a principal office in Jefferson County.

(ii) OWNER agrees to give preference and priority to local manufacturers, suppliers, vendors, contractors and labor, except where not reasonably possible to do so without significant added expense, substantial inconvenience, or sacrifice in operating efficiency. For any such exception in cases involving purchases over $1 million, a justification for such purchase shall be included in OWNER'S annual letter of compliance. OWNER further acknowledges that it is a contractual obligation, under this agreement, of persons receiving property tax abatements to favor local manufacturers, suppliers, contractors, and labor, all other factors being equal. In the event of a breach of this "buy local" provision, OWNER agrees that the percentage of abatement shall be proportionately reduced in an amount equal to the amount the disqualified contract bears to the total construction cost for the PROJECT.

ii) OWNER agrees to provide bidding information to local qualified contractors, vendors, manufacturers and labor to allow them to have sufficient information and time to submit their bids, and pre-bid meetings shall be held between OWNER and potential local bidders and suppliers of services and materials. Owner agrees that he will provide sufficient notice and information regarding to project to qualified local contractors to enable them to submit bids for materials in the early procurement processes

g. Report and certify to the COUNTY, quarterly the total number of dollars spent on local labor, local subcontractors and local vendors/suppliers in connection with the PROJECT;

h. Owner will invoice purchases locally to ensure that sales tax is credited to the benefit of Jefferson County, Texas.

i. Not in any way discriminate against or treat disparately union contractors who choose to participate in the competitive bid process relating to work on the PROJECT, nor discriminate against or treat disparately union members who seek employment on the PROJECT; and

j. Encourage and promote the utilization of Historically Underutilized Businesses (HUBs) (also known as Disadvantaged Business Enterprises, or DBEs) by the general contractor engaged by OWNER to construct the PROJECT and any turnaround project which is undertaken as part of or in connection with the PROJECT during the term of the abatement period by ensuring qualified HUB/DBE vendors and contractors are given a timely opportunity to bid on contracts for supplies and services. For purposes of the foregoing:

(i) A HUB/DBE is a business owned or controlled by Socially and Economically Disadvantaged Individuals as defined by all applicable federal or state laws and local policies, including Black Americans, Hispanic Americans, Native Americans, Asian-Pacific Americans, Asian Indian Americans, women, and individuals with disabilities.

(ii) A HUB/DBE is one that is at least 51 percent owned or controlled by one or more women or Socially and Economically Disadvantaged Individuals or, in the case of a publicly-owned business, one that at least 51 percent of the stock of which is controlled by one or more women or Socially and Economically Disadvantaged Individuals.

(iii) A business that has been certified as a HUB/DBE by an agency of the federal government or the State of Texas is presumed to be a HUB/DBE for purposes of Agreement.

(iv) Only a HUB/DBE with its principal office in the State of Texas will be recognized as a HUB/DBE for purposes of this Agreement. A list of HUB/DBE

vendors/suppliers is maintained in the COUNTY office and a list of same is attached hereto as Exhibit D. As to the use of qualified local and HUB/DBE vendors, suppliers and sub-contractors, OWNER will, at a minimum:

k. Consult with chambers of commerce, minority business associations, trade associations and other regional economic development organizations to identify local and HUB/DBE vendors, suppliers and sub-contractors;

l. Notify qualified local and HUB/DBE vendors, suppliers and sub-contractors, allowing sufficient time for effective preparation of bids for the planned work to be sub-contracted or materials, supplies or equipment to be purchased;

m. Provide qualified local and HUB/DBE vendors, suppliers and sub-contractors who are interested in bidding on a subcontract or contract for materials, supplies, equipment, or the provision of engineering and construction services and labor adequate information regarding the project as early as is practicable in the bidding process in order to allow the HUB/DBE vendors, suppliers and sub-contractors sufficient time to prepare a bid *(i.e.*, plans, specifications, scope of work, bonding and insurance requirements, and a point of contact within the general/prime contractor);

n. Negotiate in good faith with interested qualified local and HUB/DBE vendors, suppliers or sub-contractors, and award sub-contracts or contracts for materials, supplies equipment, or the provision of engineering and construction services and labor to local or HUB/DBE vendors, suppliers or sub-contractors when they are the lowest qualified responsive bidder who meets all of the applicable bid specifications; and

o. Include a provision in OWNER'S contract with the general/prime contractor on the PROJECT which requires the general/prime contractor to read and comply with the terms of this AGREEMENT relating to the use of union or non-union, local and HUB/DBE vendors, suppliers or sub- contractors.

6. VALUE OF ABATEMENT

For each year under this Agreement, the abatement percentage received by OWNER under this AGREEMENT with respect to the value of New Eligible Property, is set forth on attached Exhibit: "Tax Abatement Schedule".

The Abatement during each year covered by this Agreement shall be the value attributable to the Project multiplied by Abatement Schedule, adjusted by the Base Year Value.

7. QUARTERLY MONITORING MEETINGS

With respect to the quarterly monitoring meetings referenced in Section 5(d) above, the County Judge, County Commissioners, or their designee(s) shall be allowed to attend such quarterly monitoring meetings, on the express condition that they execute a

confidentiality agreement prepared by OWNER so as to protect confidential information which may be disclosed to them during or as a result of such monitoring meetings. OWNER agrees to reimburse the COUNTY in an amount not to exceed to $4,000.00 annually for the costs or expenses actually incurred by the COUNTY in monitoring the status of the bidding process every quarter during the construction phase of the PROJECT.

8. TAXABILITY

During the period that this AGREEMENT is effective, taxes shall be payable as follows:

a. The value of Ineligible Property shall be fully taxable;

b. The Taxable Value of existing Eligible Property as determined each shall be fully taxable; and

c. The value of New Eligible Property shall be abated as set forth in Section 6, hereinabove.

9. ADJUSTMENTS TO ABATEMENT FOR BASE YEAR VALUE DECLINE

The Jefferson County Central Appraisal District will establish the certified values of Eligible Property as of January 1, 2017, (year abatement executed) as set forth on attached Exhibit "B"," and such values shall be the values used to calculate the Base Year Value as herein defined. If on January 1st of any tax year listed on the "Tax Abatement Schedule" the Taxable Value is less than the Base Year Value, then the abatement of value otherwise available shall be reduced by one dollar for each dollar that the Taxable Value of realty improvements is less than the Base Year Value, except that no such reduction of Owner's abatement shall be made should any reduction to Taxable Value of Owner's Eligible Property result from a Force Majeure event.

In the event the Owner reduces its ad valorem taxes on personal property otherwise payable to the County by participating in a foreign trade zone, then the amount of abated value otherwise available shall be reduced by one dollar for each dollar of tax value reduction attributable to special treatment from trade zone participation. The parties hereto stipulate and agree that the certified appraisal value for this property, as calculated by the Jefferson Central Appraisal District, shall apply.

It is specifically understood and agreed by the owner that, if at any time during the effective dates of an agreement relating to abatement, the owner files or prosecutes an action to contest the appraised value of any property of the owner or owner's affiliates within Jefferson County for unequal appraisal or revision thereof pursuant to Sec. 42.26, Texas Tax Code, any and all abatements granted by County to Owner or its affiliates shall become null and void and cancelled.

10. POLLUTION CONTROL EXEMPTION

The COUNTY understands that OWNER plans (i) to request from the TCEQ a determination under Section 11.31 of the Texas Tax Code that certain property included in the New Eligible Property is pollution control property, and (ii) to apply for an exemption from ad valorem taxes under Section 11.31 of the Texas Tax Code with respect to all or a portion of such property determined by the TCEQ to be pollution control property. OWNER represents that the exempt value of such pollution control property will not exceed fifteen percent (15%) of the value of the Project in any year of Abatement under this AGREEMENT. OWNER agrees that in the event the exempt value of such pollution control property exceeds fifteen percent (15%) of the value of the Project in any year of Abatement under this AGREEMENT, the abated value will be reduced accordingly.

11. EVENT OF DEFAULT

If either party should default in performing any obligation under this AGREEMENT, the other party shall provide such defaulting party written notice of default and provide the defaulting party with a minimum period of thirty (30) days to cure such default prior to instituting an action for breach or pursuing any other remedy for default, provided however, that, if the default is of such a nature that it cannot, with the exercise of reasonable diligence, be cured within thirty (30) days, then such party shall not be in default so long as such party has commenced such cure within thirty (30) days after receiving written notice of such default and is diligently prosecuting such cure to completion. Subject to providing such notice of default and the aforesaid opportunity to cure same, the party aggrieved by default shall have the right to terminate this AGREEMENT and to pursue any remedy available at law or in equity, for breach hereof. In addition, if a party (the "Affected Party") shall become unable to timely perform any of its obligations under this AGREEMENT, other than any obligation to pay money, as a consequence of a Force Majeure Event, the Affected Party shall be relieved of such obligation (and such failure to timely perform such obligation shall not constitute a default) to the extent that and for so long as (but only to the extent that and only for so long as) it is unable to timely perform such obligation as a consequence of such Force Majeure Event. A "Force Majeure Event" means any of the following: (a) acts of God, earthquakes, tidal waves, lightning, floods, and storms; (b) explosions and fires; (c) strikes and lockouts; (d) wars, riots, acts of the public enemy, civil disturbances, hostilities, sabotage, blockades, insurrections, terrorism, and epidemics; (e) acts of expropriation, confiscation, nationalization, requisitioning, or other taking; and (f) any other event, condition, or circumstance beyond the reasonable control of the party claiming relief as a consequence thereof; provided, however, that "Force Majeure Event" does not include the inability to make payment or financial distress.

12. ASSIGNMENT

OWNER may assign this AGREEMENT, in whole or in part, to a new owner or lessee of the same PROJECT, or a portion thereof, or to an Affiliate of OWNER upon written

approval by resolution of the COMMISSIONERS COURT of such assignment, and approval shall not be unreasonably withheld or delayed. It shall not be unreasonable for the COURT to withhold approval if OWNER or the proposed assignee is liable to the COUNTY for outstanding taxes or other obligations.

13. ENTIRE AGREEMENT

The Parties agree that this AGREEMENT contains all of the terms and conditions of the understanding of the Parties relating to the subject matter hereof. All prior negotiations, discussions, correspondence and preliminary understandings between the parties and others relating hereto are superseded by the AGREEMENT.

14. SUCCESSORS AND ASSIGNS

This AGREEMENT shall be binding on and inure to the benefit of the parties, their respective successors and assigns. OWNER may not assign all or part of its rights and obligations hereunder without the prior written consent of the COUNTY, which shall not be unreasonably withheld or delayed. It shall not be unreasonable to withhold consent to assignment if OWNER or the proposed assignee(s) is/are delinquent in the payment of any ad valorem taxes.

15. NOTICE

Any notice and/or statement required and permitted to be delivered shall be deemed delivered by depositing same in the United States mail, certified with return receipt requested, postage prepaid, addressed to the appropriate party at the following addresses:

COMPANY: Mr. Dave Marchese, CEO
Coastal Caverns 1, L.P.
919 Milam St., Suite 2425
Houston, Texas 77002

COUNTY: Hon. Jeff R. Branick, County Judge
Jefferson County Texas
P.O. Box 4025
Beaumont,Texas 77704
(409) 835-8466
(409) 839-2311 (facsimile)

With a copy to: Ms. Kathleen Kennedy, Chief Civil Attorney
Criminal District Attorney
1149 Pearl Street, 3rd Floor
Beaumont, Texas 77701
(409) 835-8550
(409) 835-8573 (facsimile)

Mr. Fred L. Jackson,
First Assistant: Staff Attorney
Jefferson County Courthouse
P. O. Box 4025,
Beaumont, Texas 77704
(409) 835-8466
(409) 839-2311 (facsimile)

16. MERGER

The Parties agree that this AGREEMENT contains all of the terms and conditions of the understanding of the parties relating to the subject matter hereof. All prior negotiations, discussions, correspondence and preliminary understandings between the parties and others relating hereto are superseded by this AGREEMENT.

17. INTERPRETATION

The Parties acknowledge that both have been represented by counsel of their choosing in the negotiation and preparation of the AGREEMENT. Regardless of which party prepared the initial draft of this AGREEMENT, this AGREEMENT shall, in the event of any dispute over its meaning or application, be interpreted without reference to the principle of construction favoring the party who did not draft the AGREEMENT under construction.

18. APPLICABLE LAW AND VENUE

This AGREEMENT is made, and shall be construed and interpreted under the laws of the State of Texas and venue shall lie in Jefferson County, Texas.

19. SEVERABILITY

In the event any provision of this AGREEMENT is illegal, invalid, or unenforceable under present or future laws, then, and in that event, it is the intention of the Parties hereto that the remainder of this AGREEMENT shall not be affected thereby, and it is also the intention of the Parties to this AGREEMENT that in lieu of each clause or provision that is found to be illegal, invalid, or unenforceable, a provision be added to this

AGREEMENT which is legal, valid, and enforceable and is as similar in terms as possible to the provision found to be illegal, invalid or unenforceable.

Executed in duplicate this the __ day of _____, 201__.

FOR THE COUNTY:

_____
Hon. Jeff R. Branick, County Judge
Jefferson County, Texas

FOR THE COMPANY:

_____
Mr. Dave Marchese, CEO

EXHIBIT A "Description of Project"

The proposed project will encompass 1) completion of surface facilities and equipment required to bring existing 5 million barrels (mmbls) cavern into storage service (cavern 1); and 2) leaching and completion of seven additional caverns (caverns 2 through 8) for increased capacity through a phased construction plan. The timing of the additional seven caverns is driven by market demand and the process can take about a year for each cavern.

The project is expected to be constructed in five phases. This Agreement applies only to Phases One and Two, which include caverns 1, 2 and 3.

Phase One – Cavern 1: Completion of surface facilities and equipment required to bring existing cavern 1 into storage service with a capacity of 5 mmbls. Estimated investment of $55 million and 13 new permanent employees.

Phase Two – Caverns 2 and 3: Leaching and completion of two additional caverns with 3 mmbls capacity each. Estimated investment of $56 million and 7 new permanent employees.

A separate Chapter 312 Abatement will be filed for Phase Three, which will include caverns 4 and 5 (estimated investment of $66 million), Phase Four, which will include caverns 6 and 7 (estimated investment of $63 million), and Phase Five, which will include cavern 8 (estimated investment of $31 million).

"Tax Abatement Schedule"

Tax Year		**Abatement Percentage**
1.	2019	100 %
2.	2020	100 %
3.	2021	100 %
4.	2022	80%

5.	2023	80%
6.	2024	80%
7.	2025	60%
8.	2026	60%

EXHIBIT B "Base Year Property"

This base year taxable value as certified will be attached, by consent of the parties, when same is calculated and adopted by the Jefferson County Appraisal District.

EXHIBIT C – "Reinvestment Zone"

"

EXHIBIT "C"

ORDINANCE NO.14-024

ENTITLED AN ORDINANCE DESIGNATING AN AREA AS THE GATSBY REINVESTMENT ZONE PURSUANT TO THE TEXAS REDEVELOPMENT AND TAX ABATEMENT ACT (TEXAS TAX CODE, CHAPTER 312); PROVIDING TAX INCENTIVES; PROVIDING FOR SEVERABILITY; AND PROVIDING FOR REPEAL.

WHEREAS, the City of Beaumont endeavors to create the proper economic and social environment to induce the investment of private resources in productive business enterprises located in areas of the City; and,

WHEREAS. it is found to be feasible and practical and would be a benefit to the land to be included in the zone and to the City of Beaumont after the expiration of any agreement entered into pursuant to the Property Redevelopment and Tax Abatement Act; and,

WHEREAS, the zone is for Commercial-Industrial tax abatement; and,

WHEREAS, the area being designated is reasonably likely as a result of the designation to contribute to the retention or expansion of primary employment or to attract major investment in the zone that would be a benefit to the property and that would contribute to the economic development of the City of Beaumont; and,

WHEREAS, to further this purpose, it is in the best interest of the City of Beaumont to designate the area described in Exhibit "A" and shown on Exhibit "B" as the Gatsby Reinvestment Zone pursuant to the Texas Redevelopment and Tax Abatement Act (Texas Tax Code, Chapter 312);

NOW, THEREFORE, BE IT ORDAINED BY

THE CITY COUNCIL OF THE CITY OF BEAUMONT:

Section 1.

That the statements and findings set out in the preamble to this ordinance are hereby, in all things, approved and adopted.

Section 2.

That the City Council hereby designates the area described in in Exhibit A and shown on Exhibit "B," attached hereto and incorporated herein for all purposes, as the Gatsby Reinvestment Zone (herein referred to as the "Zone").

Section 3.

That the City Council finds that the Zone meets the criteria contained in the Texas Redevelopment and Tax Abatement Act (Texas Tax Code, Chapter 312).

Section 4.

That the City Council finds that the designation of the reinvestment zone would contribute to retention or expansion of primary employment in the area and/or would contribute to the attraction of major investments that would be a benefit to the property and would contribute to the economic development of the municipality.

Section 5.

That the City Council may provide certain tax incentives applicable to business enterprises in the Zone, which are not applicable throughout the city, as allowed for in the Act.

Section 6.

That the City Council has established certain guidelines and criteria governing tax abatement agreements and is therefore eligible to participate in tax abatement.

DESCRIPTION OF THE GATSBY REINVESTMENT ZONE

All bearings and coordinates are based on the Texas Coordinate System, South Central Zone, (NAD 27).

BEGINNING at a 2" iron pipe found for the most Southerly corner of the herein described Gatsby Reinvestment Zone and a call 727.93 acre tract being a part of the same tracts as recorded in Volume 1765, Page 220, Jefferson County Deed Records (J.C.D.R.); said "POINT OF BEGINNING" being in the North line of McFaddin Canal No. 1.

THENCE, North 58°01'45" West, at 695.32 feet pass a TXDOT concrete ROW monument with aluminum disk found at the intersection of the South ROW line of State Highway FM 3514, said FM Highway 3514 being a perpetual road easement as recorded in File Number 9310194, Film Code 104-73-1433, J.C.O.P.R., at 1273.69 feet pass a found TXDOT concrete ROW monument in the North ROW line of said FM 3514, and continuing for a total distance of 2914.31 feet (call North 54°19'27" West, 2914.29 feet) to a found 2" iron pipe in concrete (Yount-Lee Oil Co. monument), said monument being the most Easterly corner of a call 2.125 acre tract conveyed to Amoco Pipeline Company as recorded in File Number 98-9801168, Jefferson County Official Public Records (J.C.O.P.R.);

THENCE, along the South line of said 2.125 acre tract, South 59°03'22" West, 415.10 feet (call 62°42'45" West, 414.70 feet) to a 5/8" iron rod found for the most Southerly corner of said 2.125 acre tract, said corner being in the Easterly ROW line of Union Pacific Railroad (formerly T&NO RR), said corner being the Northwest corner of a call 8.203 acre tract as recorded in File Number 98-9821361, J.C.O.P.R.;

THENCE, along said Easterly ROW line of Union Pacific Railroad (100' wide), North 30°56'59" West, 267.57 feet (call North 27°14'47" West, 267.21 feet) to a ¾" iron pipe with cap set for the Northwest or most Westerly corner of said 2.125 acre tract, from said ¾" iron pipe a found 1" iron pipe bears North 18°58'16" East, 1.62 feet;

THENCE, North 59°03'22" East, at 278.71 feet (call 278.14 feet) pass a 2" iron pipe in concrete (Yount-Lee Oil Co. monument) found for a corner of said 727.93 acre tract and said 2.215 acre tract, and continuing for a total distance of 2191.91 feet (call 2191.00 feet) to a point in a found fence corner post in concrete;

THENCE, North 30°49'18" West, at 8.80 feet pass a ½" iron rod with Amoco Production cap found for reference, and continuing for a total distance of 3350.00 feet (call North 27°06'49" West, 3350.01 feet) to a point at a 2" iron pipe in concrete found destroyed;

THENCE, along the most Northwesterly line of said 727.93 acre tract, North 42°02'16" East, at 10.00 feet pass a ¾" iron pipe with cap set for reference, and continuing for a total distance of 2306.14 feet (call North 45°45'45" East, 2306.11 feet) to a ½" iron rod with Amoco Production cap found at the most Northerly corner of said 727.93 acre tract;

EXHIBIT "A"

THENCE, North 42°02'16" East, 148.02 feet (call North 45°45'45" East, 148.00 feet) to a found ½" iron rod with Amoco Production cap;
THENCE, along the Southwesterly line of a call 103.89 acre TEPPCO tract as recorded in File Number 9006316, film Code 103-07-1160, J.C.O.P.R., South 52°27'45" East, 1864.90 feet to a ¾" iron pipe with cap set for the most Southerly corner of said 103.89 acre tract, from said ¾" iron pipe a found iron rod with Amoco Production cap bears North 24°51'54" East, 4.99 feet;

THENCE, along the Southeasterly line of said 103.89 acre tract and a call 13.12 acre TEPPCO tract as recorded in File Number 9006316, North 37°23'15" East, 2681.07 feet (call 2681.0 feet) to a ¾" iron pipe with cap set for the most Easterly corner of said 13.12 acre tract, said corner being in the Southwesterly line of a Lower Neches Valley Authority (LNVA) 120 foot wide canal easement as recorded in Volume 264, Page 489, J.C.D.R.;

THENCE, along the Northeasterly line of said 13.12 acre tract, same being the Southwesterly line of said LNVA easement, North 52°27'30" West, 1903.70 feet to a ¾" iron pipe with cap set for the most Northerly corner of said 13.12 acre tract;

THENCE, traveling in a Northerly direction approximately 365 feet to a 3/4" iron pipe with cap set at the intersection of the Northerly line of said McFaddin Canal No. 2 with said GSU Northeasterly line, said corner being the Southwest corner of the residue of a call 155.58 acre tract as recorded in Volume 260, Page 233, J.C.D.R.;

THENCE, along the Northerly line of said McFaddin Canal No. 2, same being the South line of said 155.58 acre tract, North 53°05'46" East, 1098.05 feet to a set ¾" iron pipe with cap;

THENCE, along the North line of said McFaddin Canal and the south line of said 155.58 acre tract, North 61°13'45" East, 400.24 feet to a ¾" iron pipe with cap set in the Westerly ROW line of State Highway 69, 96 & 287 (343' wide), from said pipe an iron rod with plastic cap bears North 46°48'00" West, 6.73 feet;

THENCE, traveling in an Easterly Northeasterly direction approximately 335 feet to a ¾" iron pipe with cap set at the intersection of the Northerly line of said McFaddin Canal No. 2 with said Easterly ROW line, said pipe being in the South line of the residue of said 155.58 acre tract;

THENCE, along the Northerly line of said McFaddin Canal No. 2, same being the South line of said 155.58 acre tract, North 61°13'45" East, 333.62 feet to a set ¾" iron pipe with cap;

THENCE, along the North line of said McFaddin Canal and the South line of said 155.58 acre tract, North 43°42'38" East, 191.53 feet to a ¾" iron pipe with cap set in the Westerly ROW line of State Highway FM 347 (200' wide);

THENCE, traveling in a Northeasterly direction approximately 215 feet to a ½" iron rod found in the Northeast ROW line of State Highway FM 347 (200' wide at this point);

THENCE, along the Northeast ROW line of said FM Highway 347, North 51°42'49" West, at 15.5 feet pass a found concrete ROW monument, and continuing for a total distance of 396.17 feet to a found TXDOT concrete monument with brass cap (disturbed);

THENCE, continuing along the ROW line of FM Highway 347 (varying width), North 42°14'32" East, 128.65 feet (call 126.76) to a set ¾" iron pipe with cap;

THENCE, along the ROW line of FM Highway 347, North 63°42'49" West, 230.38 feet to a set ¾" iron pipe with cap, said point being the beginning of a curve to the right;

THENCE, 200.00 feet along said curve to the right in said ROW line, said curve having a radius of 954.93 feet, a delta of 12°00'00", and a chord bearing North 57°42'49" West, 199.63 feet to a point on a found 4" iron pipe fence post;

THENCE, along the ROW line of said FM Highway 347, North 51°42'49" West, 101.62 feet to a point on found 4" iron pipe fence post;

THENCE, North 43°32'08" East, 1,187.75 feet (call North 47°15'27" East) along the Southeast line of a call 20.03 acre tract as recorded in File Number 97-9731390, J.C.O.P.R. to a found 2" iron pipe in concrete (Yount-Lee Oil Co. monument) said point being the East corner of said 20.03 acre tract, said point also being in the West line of the Kansas City Southern Railroad (100' wide) as recorded in Volume 230, Page 58, J.C.D.R.;

THENCE, along the Southwest line of said Kansas City Southern Railroad, South 47°48'03" East, 1,002.54 feet (call South 44°05'03" East), to a set ¾" iron pipe with cap from which a found ½" iron rod bears South 50°27'20" West, 1.41 feet), said iron pipe being in the North line of McFaddin Canal No. 2;

THENCE, along said North line and a Southeasterly line of a 24.05 acre tract as recorded in File Number 2001014848, J.C.O.P.R., North 74°23'22" East, approximately 10 feet to a ¾" iron pipe with cap found in the Southwesterly ROW line of said Kansas City Southern Railroad;

THENCE, North 77°00'12" East, 121.79 feet to a ¾" iron rod with cap set in the Northeasterly line of said railroad;

THENCE, along said Northeasterly ROW line, North 47°48'03" West, 54.29 feet to a 5/8" iron rod (bent) found at the Southwest corner of a call 23.5505 acre tract as recorded in File Number 98814109;

THENCE, along the South line of said 23.5505 acre tract, North 83°25'16" East, 398.85 feet to a 2" iron pipe found at the Southeast corner of said 23.5505 acre tract, said corner being a corner of a call 461.42 acre tract as recorded in File Number 2001014848, J.C.O.P.R.;

THENCE, North 47°48'03" West, 2,715.70 feet (call North 44°07'00" West, 2,713.75 feet) along said Easterly line of said 23.5505 acre tract to a 1" iron pipe found for the most Westerly corner of the herein described tract, said point being the most Southerly corner of a call 203.2524

acre tract as recorded in File Number 98-9814111, said point also being in the East line of said 23.5505 acre tract;

THENCE, North 41°56'47" East, 2,730.34 feet (call North 45°38' East, 2,730.3 feet), to a found ½" iron rod;

THENCE, North 87°28'34" East (call South 88°55' East), at 464.63 feet, pass a found 3-1/2" aluminum pipe, at 876.09 feet pass a found 3-1/2" aluminum pipe, at approximately 2200 feet to a point for corner being the Southwest corner of a call 24.6091 acre tract described as Tract 128, P. Humphreys Survey, Abstract 32 in the Jefferson County Tax Records.

THENCE, traveling in a Northerly direction along the West line of said 24.6091 acre tract approximately 1005 feet to a point for corner,

THENCE, traveling in a Westerly direction along the North line of said 24.6091 acre tract approximately 750 feet to a point in the vegetation line of the Neches River,

THENCE, along with the meanders of the Neches River the following courses and distances:

Southeast approximately 570 feet to a point;

Southeast approximately 475 feet to a point;

South 14°23'24" East, 479.93 feet to a point on the end of an existing bulkhead;

South 08°41'51" East, 996.25 feet along an existing bulkhead to a point;

South 37°26'52" West, 97.18 feet along an existing bulkhead to a point;

South 12°03'07" East, 90.65 feet along an existing bulkhead to a point;

South 24°41'26" West, 54.32 feet to a point on the end of said bulkhead;

South 05°00'28" East, 263.95 feet to a point;

South 10°22'26" East, 128.42 feet to a point;

South 86°15'02" West, 27.20 feet to a point;

South 19°11'28" West, 105.60 feet to a point;

South 31°57'39" East, 60.57 feet to a point;

South 75°59'58" East, 57.99 feet to a point;

North 89°01'22" East, 91.42 feet to a point;

South 15°36'54" East, 37.98 feet to a point;

South 23°49'09" West, 39.63 feet to a point;

South 14°25'57" West, 241.83 feet to a point;

South 36°47'52" East, 46.54 feet to a point;

South 05°09'24" East, 44.99 feet to a point;

South 31°53'11" East, 354.38 feet across a United States Maritime Commission channel to the end of an existing bulkhead;

South 26°37'11" East, 226.69 feet to a point;

South 46°41'09" East, 111.12 feet to a point;

South 79°45'19" East, 77.11 feet to a point;

South 43°02'03" East, 123.25 feet to a point;

THENCE, departing the Neches River, South 03°43'30" East, at 20.24 feet pass a ½" iron pipe set for reference, and continuing for a total distance of 120.24 feet to a set ¾" iron pipe with cap;

THENCE, South 27°36'31" West (call South 31°20'02" West), along the North line of a Kansas City Southern Railroad strip of land as recorded in Volume 230, Page 626, J.C.D.R., at 10.0 feet pass a found 2" iron pipe, and continuing for a total distance of 1,428.00 feet to a point in deep marsh;

THENCE, South 38°38'59" West, 269.63 feet, (call South 42°17'54" West, 270 feet) to a set ¾" iron pipe with cap;

THENCE, South 86°26'16" West (call North 89°56'13" West), 148.00 feet to a found 2" iron pipe in concrete (Yount-Lee Oil Co. monument);

THENCE, North 89°14'28" West, 102.67 feet (call North 85°26'13" West, 103 feet) to a found ½" iron rod;

THENCE, North 46°58'31" West, 455.46 feet (call North 43°21'07" West, 455 feet) to a set ¾" iron pipe with cap;

THENCE, South 32°20'56" West, at 3.60 feet pass a found ½" iron rod in concrete, and continuing for a total distance of 685.34 feet (call South 36°03'02" West, 684.74 feet) to a found ½" iron rod;

THENCE, continuing South 32°20'26" West, approximately 840 feet, to a point for corner in the Northeast ROW line of said State Highway FM 347;

THENCE, traveling in a Southwesterly direction approximately 105 feet to a point for corner being the East corner of a 13.202 acre tract described as Tracts 5-A & 5-C, P. Humphreys Survey, Abstract 32 in the Jefferson County Tax Records.

THENCE, traveling in a Southwesterly direction along the Southeast line of said 13.202 acre tract approximately 1000 feet to a point being the most Southerly corner of said 13.202 acre tract and the East ROW line of State Highway 69, 96 & 287;

THENCE, continuing Southwest along the same line 220 feet to a point in the West ROW line of State Highway 69, 96 & 287, also being the north line of a call 101.86 acre tract of land, being part of a tract conveyed to Amoco Pipeline Company as recorded in File Number 98-9801168, Jefferson County Official Public Records (J.C.O.P.R.);

THENCE, along said Southwest ROW line of FM Highway 347, South 51°42'49" East, approximately 1260 feet, to a concrete ROW monument found for corner from which a found ½" iron rod bears South 52°05'33" East, 4.34 feet, said corner being the most Easterly corner of said 101.86 acre tract;

THENCE, South 38°25'43" West (call South 42°05'58" West), 2129.69 feet to a ¾" iron pipe with cap set at the intersection of the South line of said 101.86 acre tract with the Easterly ROW line of US Highway 69, 96 and 287 (338 feet wide at this point);

THENCE, in an Easterly direction approximately 330 feet to an iron rod in concrete (bent) bears North 89°16'49" East, 0.57 feet, said point being in the Westerly ROW line of US Highway 69, 96 and 287 (338' wide);

THENCE, along said Westerly ROW line, South 27°44'13" East, 286.94 feet to a point from which a found ½" iron rod bears North 58°29'12" East, 0.48 feet, said point being the intersection of said Westerly highway ROW line with the Southwesterly line of said LNVA 120 foot wide canal easement;

THENCE, along the Southwesterly line of said LNVA canal easement, North 52°27'30" West, 184.80 feet to a ¾" iron pipe with cap set for the most Northerly corner of a call 1.64 acre LNVA fee tract as recorded in Volume 1394, Page 410, J.C.D.R.;

THENCE, with a Westerly line of said 1.64 acre tract, South 14°57'30" East, 230.60 feet to a ¾" iron pipe with cap set for corner;

THENCE, with a Westerly line of said 1.64 acre tract, South 29°20'38" East, 339.69 feet (call 335.7 feet) to a set 3/4" iron pipe with cap;

THENCE, with a Southerly line of said 1.64 acre tract, South 54°42'13" East, 261.90 feet to a ¾" iron pipe with cap set in the Westerly ROW line of US Highway 69, 96 & 287;

THENCE, along said Westerly ROW line, South 27°44'13" East, at 656.55 feet pass a found concrete ROW monument, and continuing for a total distance of 658.15 feet to a ¾" iron pipe with cap set for corner in the Northwesterly line of old McFaddin Canal No. 1;

THENCE, along the Northwesterly line of McFaddin Canal No. 1 and the Southeasterly line of said 727.93 acre tract, South 55°07'11" West (call South 58°50'West), 1320.78 feet to a point from which a found 2" iron pipe bears North 38°55' West, 2.0 feet;

THENCE, along the Northwesterly line of McFaddin Canal No. 1 and the Southeasterly line of said 729.93 acre tract, South 43°32'50" West, 199.83 feet (call South 4715' West, 200 feet) to a point from which a found 2" iron pipe bears North 52°07' West, 2.0 feet;

THENCE, along the Northwesterly line of McFaddin Canal No. 1 and the Southeasterly line of said 729.93 acre tract, South 32°11'35" West, 835.48 feet (call South 35°55' West, 836 feet) to a point from which a found 2" iron pipe bears North 52°28' West, 2.0 feet;

THENCE, along the Northwesterly line of McFaddin Canal No. 1 and the Southeasterly line of said 729.93 acre tract, South 32°16'04" West, at 3973.53 feet pass a 3/4 " iron pipe with cap set at the intersection of the North ROW line of the aforesaid State Highway FM 3514 with the Southeasterly line of said 729.93 acre tract, at 4182.14 pass a ¾" iron pipe with cap set in the South ROW line of said FM Highway 3514, and continuing for a total distance of 5024.51 feet to the **"POINT OF BEGINNING"** and containing 1559.5 acres more or less.

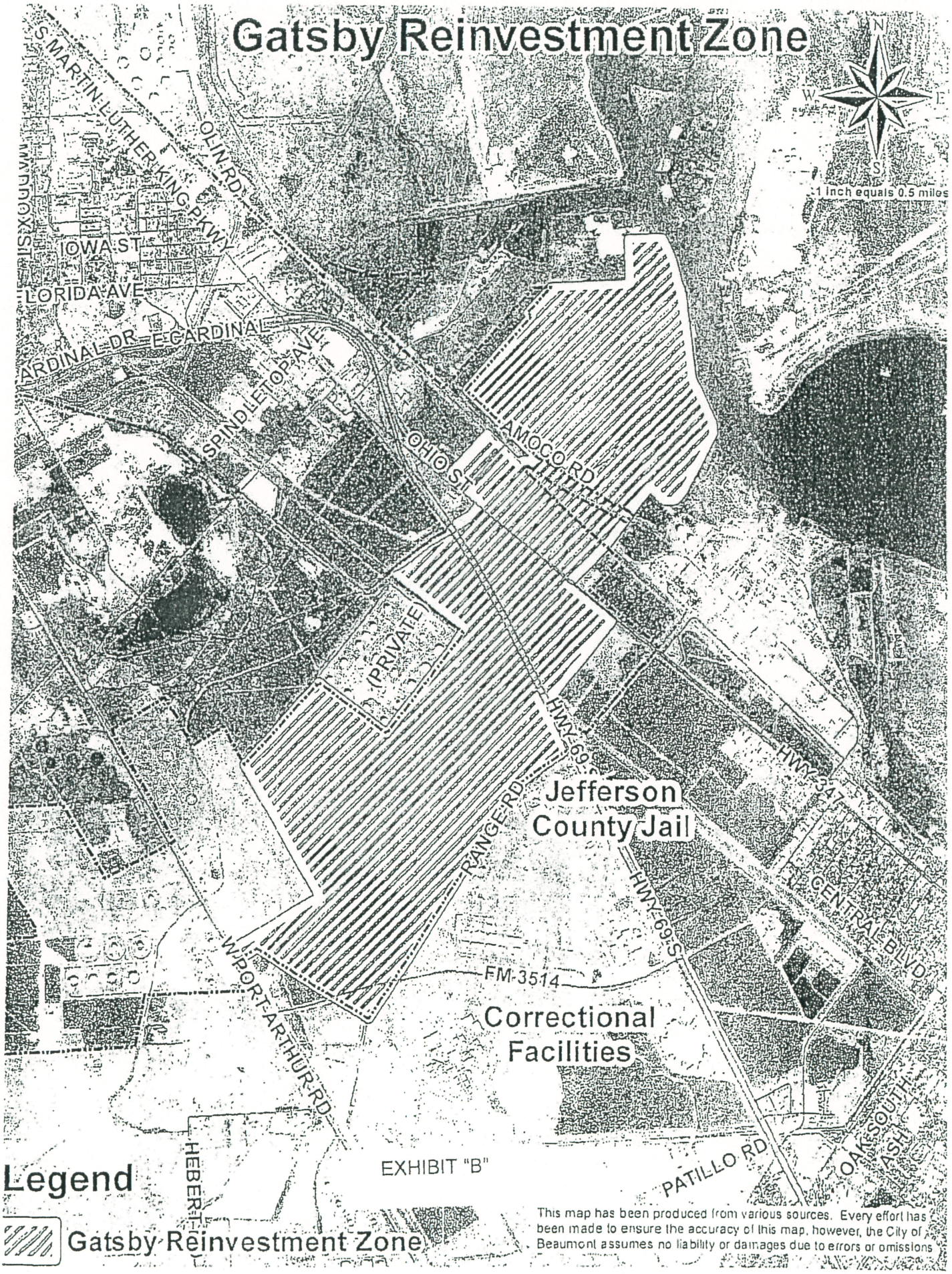
Gatsby Reinvestment Zone
N
W
E
S
1 inch equals 0.5 miles
S MARTIN LUTHER KING PKWY
OLIN RD
IOWA ST
LORIDA AVE
ARDINAL DR E
CARDINAL
SPINDLETOP AVE
OHIO ST
AMOCO RD
(PRIVATE)
HWY 69
RANGE RD
Jefferson
County Jail
HWY 347
CENTRAL BLVD
HWY 69 S
FM 3514
Correctional
Facilities
W PORT ARTHUR RD
HEBERT
PATILLO RD
OAK SOUTH
ASH
EXHIBIT "B"
Legend
Gatsby Reinvestment Zone
This map has been produced from various sources. Every effort has been made to ensure the accuracy of this map, however, the City of Beaumont assumes no liability or damages due to errors or omissions

Section 7.

That a public hearing to consider this ordinance was held by the City Council on June 10, 2014.

Section 8.

That this ordinance shall take effect from and after its passage as the law and charter provide.

Section 9.

That if any section, subsection, sentence, clause, or phrase of this ordinance, or the application of same to a particular set of persons or circumstances should for any reason be held to be invalid, such invalidity shall not affect the remaining portions of this ordinance, and to such end the various portions and provisions of this ordinance are declared to be severable.

Section 10.

That all ordinances or parts of ordinances in conflict herewith are repealed to the extent of the conflict only.

PASSED BY THE CITY COUNCIL of the City of Beaumont on this the 10th day June, 2014.

THE CITY OF BEAUMONT, JEFFERSON COUNTY, TEXAS
BEAUMONT, TEXAS

Becky Ames

- Mayor Becky Ames -

EXHIBIT D – "List of HUB/ DBE Companies"

Minority Business Directory

*** Indicates certification as a HUB/DBE has been obtained**

Accountants/ Certified Public

ComPRO Tax
Denise White
2720 N. 11th Street
Beaumont, TX 77703
Tel: 409-924-7777
Fax: 409-924-0610
Website: www.comprotax.com

Fedric Zeno, Sr.
ComPRO Tax, Inc.
2905 Laurel Ave.
Beaumont, TX 77703
Tel: 409-832-1099
Fax: 409-832-2108
Home: 409-840-5129
Email: zenoandassociate@aol.com

Gayle Botley
Botley & Associates, CPA's
Tel: 409-833-8757

Joanne Spooner
South Park ComPRO Tax
4390 Highland Avenue
Beaumont, TX 77705
Tel: 409-832-8299
Fax: 409-832-1661
Website: www.comprotax.com

*Stephanie Clark
The Ann Group
2700 Blanchette St. (01)
Tel: 409-813-3696
Fax: 409-813-3404
Email: sclark@theanngroup.com

Mr. Yusuf Muhammad
ComPRO Tax
999 S. 4th St.
Beaumont, TX 77701
Tel: 409-832-3565
Fax: 409-832-2252
Website: www.comprotax.com

Ms. Margaret Bostic
That Too
Tel: 409-842-6966

Advertising & Public Relations

Jessie Haynes & Associates
P.O. Box 22577
Beaumont, TX 77720
Tel: 409-838-2222
Website: www.haynespr.com

Texas Black Pages
P.O. Box 22577
Beaumont, TX 77720
Tel: 409-838-2222
Website: www.texasblackpages.com

Agricultural

Lloyd J. Hebert
Cooperative Extension Program
1295 Pearl St
Beaumont, TX 77701
Tel: 409-835-8461
Cell: 409-351-1331

Air Conditioning Repair

Big-O Air Conditioning & Heating
1370 Lavaca
Beaumont, TX 77705
Tel: 409-833-4817
Cell: 409-656-0827

J&W A/C Heating
Ivory Joe Harris
5465 Emerald Dr.
Beaumont, TX 77705
Tel: 409-842-2389

Jon D. Welch
Coushatta
P.O. Box 13071
Beaumont, TX 77726
Tel: 409-899-2552
Email: jon@coushatta-services.com
Website: www.coushatta-services.com

LanLos Appliance & Air Conditioning Repair
P.O. Box 5513
Beaumont, TX 77726
Tel: 409-724-4101

Villery's
Refrigeration & Air Conditioning Service
Tel: 409-838-2233

Barbecue/ Caterers

Charlie Dean
Dean's Bar-B-Q & Catering
805 Magnolia
Beaumont, TX 77701
Tel: 409-835-7956

Eugene Sam
Tillmans Barbecue Pit
1104 Sherman St
Beaumont, TX 77701
Tel: 409-838-5592

Gerard's Barbecue Diner
3730 Fannett Rd
Beaumont, TX 77705
Tel: 409-842-9135

Jack Patillo Barbecue
2775 Washington Blvd.
Beaumont, TX 77705
Tel: 409-833-3154

Leonard Broussard
Broussard's Bar-B-Q
2930 S. 11th Street
Beaumont, TX 77701
Tel: 409-842-1221

*Mouton's Catering
3845 Washington Blvd
Beaumont, TX 77705
Tel: 409-842-4933

Carpet/ Flooring

*Alton & Michelle Babineaux
Bab's Carpet
4940 Highland Ave.
Beaumont, TX 77705
Tel: 409-833-7484
Fax: 409-790-4218

Delores Fruge
Power Stretch Carpet
502 S. 4th St.
Beaumont, TX 77701
Home: 409-832-8626
Cell1: 409-617-1862
Cell2: 409-338-9907
Fax: 409-833-3230

Raymon and Sharonne Morris
Morris and Morris Floor Covering
4515 Ironton
Beaumont, TX 77703
Home: 409-833-5011
Tel: 409-553-9861

Computer Service & Repair

Chris Martin
601 Woodworth
Port Arthur, TX 77642
Tel1: 409-982-3528
Tel2: 409-982-3529

David Leaven / Marcus Frank
F & L Computer Solutions
P.O. Box 328-A
Winnie, TX 77665
Tel: 409-351-1256

Consultant

Felicia Young, Owner
Five Star Business Solutions
Tel: 409-466-6038

Contractors /Construction Services/Community Development/ Home Builders

Al Armstrong
SEATECH
3227 Highland Ave
Beaumont, TX 77701
Tel: 409-350-5620

Albert Ceaser
CMM Construction
Tel 409-842-1250

Arthur Limbrick, Sr.
Lim Construction, Inc.
Commercial & Residential Building
4935 Fannett Road
Beaumont, TX 77705
Tel: 409-842-9765
Fax: 409-842-9141
Cell: 409-338-0832

*Bruce's General Construction, Inc.
1175 Reynolds Rd
Beaumont, TX 77707
Tel: 409-866-6245

Celestine's Construction
510 Palm St.
Beaumont, TX 77705
Tel: 409-832-1342

*Christene Sonnier
Coastal Industrial Services, Inc.
P.O. Box 158
Port Neches, TX 77651
Tel: 409-736-3797
Cell: 409-728-5072

205 West Hwy 365, Ste. A
Port Arthur, TX 77640
Fax: 409-736-2270
Email: www.coastaltxs@aol.com

Cornelius Harris
Alamo Contractors

Don LaFleur
Don LaFleur Construction & Homes
5681 Eastex Freeway
Beaumont, TX 77708
Tel: 409-347-0593

Donald Ray Wise

Wise Barricades
Tel: 409-835-5113

Eddie Senigaur
Senigaur Home Builder & General Contractor
3196 Washington Blvd.
Beaumont, TX 77705
Tel: 409-842-5220
Fax: 409-842-2983

Jerry Ball- VP
EnviroTech Services LLC
Southeast Texas Division
3024 Commerce St.
Port Arthur, TX 77642
Tel: 409-790-5910
Toll Free: 800-286-3695
Email: jerry.ball@osfinc.net

*Joshua Allen
J. Allen contractors, Inc.
Tel: 409-833-8947
Email: office@jallenmgmt.com

Lloyd Broussard
EnviroTech Services, LLC
4002 Caroline Street
Houston, TX 77004
Tel: 713-551-6671

Ernestine Wade
Gulf Coast Industrial Contractors, Inc.
Tel: 409-842-1522

Joe Wheaton
Joe Wheaton Construction Co.

Johnny Casmore
Builders, Inc.
7295 Ellen Lane
Beaumont, TX 77708
Tel: 409-892-2223
Fax: 409-466-1251

Joseph D. Deshotel
DEZ-TEX Construction, Inc.
Tel: 409-842-4844

*Kenny Timms
KT Maintenance
Tel: 409-982-9952
Email: Kenny.tims@ktmaintenance.com

Mr. Vories Lornette, Sr.
Faith Construction
Tel: 409-794-2615

Mr. Matt Hopson
Southeast TX Community Development
1460 Gladys
Beaumont, TX 77701
Tel: 409-835-7527
Fax: 409-835-1680
Email: mhopson@setcdc.org

Mrs. Antoinette J. Hardy
Beaumont Community Development
505 E. Florida
Beaumont, TX 77705
Tel: 409-813-2158
Fax: 409-813-2165
Email: ahardy1969@yahoo.com

Ms. Mary Randall
J&M construction
Tel: 409-842-0967

Naomi Lawrence-Lee
CNB Development Group
Tel: 409-767-8037
Email: nlee@cnbhomes.com

Ories Holmes
Ories Holmes Construction
Tel: 409-842-3943

Paul Buxie
Buxie Builders
Tel: 409-833-2028

Perkins brown
Brown Fencing & construction
Tel: 409-833-1533

R. Anthony Lewis II
Custom Home Design & Building
Tel: 409-839-4735

Ray Marsh
RAM Contracting Services
Tel: 214-597-0541
Email: ray@rammep.com

Richard Gilbert / Bruce Dunbar
Owner / Superintendent
GP Realty Building Co.
648 Orleans
Beaumont, TX 77701
Richard Tel: 281-895-7773
Bruce Tel: 409-454-6356
Fax: 409-835-6775

*Roosevelt Petry
GP Industrial Contractors, Inc.
rpetry@gpic2000.com
Port Arthur, TX 77640
Tel: 281-850-8889

Steve Andrus
Andrus Construction
Beaumont, TX 77703
Home: 409-835-4397
Work: 409-835-8629
Cell: 409-466-1860

William Kenebrew, Sr.
Kenebrew Masonary
Tel: 409-866-3310

Commodities

*Loma George
LG Supplies
9545 Riggs Street
Beaumont, TX 77707
lomageorge@att.net
Tel: 409-782-4086

Copy Services

Jeanette Rideau
Reliable Copy Service
2498 Washington Blvd –B
Beaumont, TX 77705
Tel: 409-835-1218
Fax: 409-838-0064
Email: jeanetteRCS@sbcglobal.net

Council

Beverly L. Hatcher- President
Golden Triangle Minority Council, Inc.
P.O. Box 21664
Beaumont, TX 77720-1664
Tel: 409-962-8530
Fax: 409-898-8077
Email: gtmbc@ih2000.net
Website: www.gtmbc.com

Electrical/ Mechanical Contractors

Calvin Walker
Walker's Electric Company
2916 Magnolia Street
Beaumont, TX 77703
Tel: 409-212-9244
Fax: 409-212-9245

*Gregory T. Johnson, Sr.
GJETCO
P.O. Box 22735
Beaumont, TX 77720
Tel: 409-866-3829
Fax: 409-866-6962

*Joseph C. Ledet, III
Ledet Electrical Services
Tel: 409-896-5471
Cell: 409-791-1366

Ray Marsh
RAM Electrical & Mechanical Contractors
3467 Elinor
Beaumont, TX 77705
Cell: 214-597-0541
Fax: 972-539-2422
Email: ray@ram4mep.com

Employment Services

Imogene Chargois
Texas Workforce Centers of Southeast Texas
304 Pearl Street
Beaumont, TX 77701
Tel: 409-839-8045
Fax: 409-835-0774
Email: imogene.chargois@setworks.org

*Luis G. Silva
Silva Employment Network
2901 Turtle Creek Drive, Suite 205
Port Arthur, TX 77642
Tel: 409-727-4024
Fax: 409-727-4094
Email: lgsilva1940@aol.com

Energy

Syed Mohiuddin
Apex Petroleum & Energy Xpress, LLC
The Apex Plaza
9100 SW Freeway, Suite 201
Houston, TX 77074
Tel: 713-541-2755
Fax: 713-541-5535
Website: www.syed@apexgroupofcompaines.com

Engineers

*Andy Chica
Chica & Associates Inc.
595 Orleans, Suite 508
Beaumont, TX 77701
Tel: 409-833-4343

Sina K. Nejad, P.E.
Sigma Engineers, Inc.
4099 Calder Avenue
Beaumont, TX 77706
Tel: 409-898-1001
Fax: 409-898-3420
Email: mail@sigmaengineers.com

Environmental

Bennard L. Nelson, Jr.
Legacee Environmental
6001 Savoy, Suite 204
Houston, TX 77035
Tel: 713-218-8647
Fax: 713-218-8649
Email: bnelson@legaceenvironmental.com

* Tiffany Liepke, President
Chemical and Petrochemical Inspections L.P.
5300 39th Street – P.O. Box 387
Groves, TX 77619
409-962-1318
Mobile: 409-460-0484
Email: liepke@cpilaboratory.com
Website: cpilaboratory.com

Florists- Retail

Mr. Walter McCloney
McCloney Florist
2690 Park St
Beaumont, TX 77701
Tel: 409-838-6861
Fax: 409-838-0085
Email: waltermccloney@sbcglobal.net

Home Repair & Maintenance

Clinton Ford
Clint's Maintenance and Repairs
8345 Lawrence Drive
Beaumont, TX 77708
Tel: 409-899-4547

Industrial Consultant

B.D. Belvin and Assoc.
Consulting Business Development
9692 Westhiemer Rd., Suite 83
Houston, TX 77063
Tel: 512-789-8178
Email: david@bdbelvin.com
Website: www.bdbelvin.com

Glenn J. Walters
Home Sweet Home Enterprise, Inc.
5212 Culpepper PL
Wesley Chapel, FL 33544
Tel: 813-907-9499
Cell: 813-503-8896
Fax: 813-994-9557
Email: glennjwalters@aol.com

Insurance

Bobby L. Holmes
Farmers Insurance Group
1120 Woodworth Blvd.
Port Arthur, TX 77640
Tel: 409-982-1200
Fax: 409-982-1300
Email: bholmes@farmeragent.com

Byron Lewis
LRC Insurance, Inc.
190 S. Dowlen Road
Beaumont, TX 77707
Tel: 409-866-7073
Cell: 409-466-3664
Email: lrcinsurance@yahoo.com

Charles E. Taylor
Farmers Insurance Group
3355 Washington Blvd.
Beaumont, TX 77705
Tel: 409-842-8300
Home: 409-866-8412
Email: mrcharlestaylor@cs.com

O'Dell E. Harmon
A & M Marketing
595 Orleans, Suite 1128
Beaumont, TX 77701
Tel: 409-466-2533
Email: odharm21@yahoo.com
Website: www.coloniallife.com

Lora Brooks Francis
Insurance Medical Services, Inc.
8100 Lemon Tree Court
Port Arthur, TX
Tel & Fax: 409-722-0077

Cell: 409-289-0945

Mark A. Williams
Protectors Insurance & Financial Services
2600 South Loop West, Suite 520
Houston, TX 77054
Tel: 832-347-6080
Fax: 713-660-9977
Email: mwilliams@protectorinsurance.com

Mr. Lawrence Evans
Farmers Insurance Co.
3355 Washington Blvd.
P.O. Box 22897
Beaumont, TX 77720
Tel: 409-842-8300
Fax: 409-842-8304
Email: levansinsurance@msn.com

Tarik Cooper
Frank and Cooper, Inc.
125 IH 10 North Street, Suite 410
Beaumont, TX 77707
Tel: 409-284-5341
Cell: 409-939-0247

Thelma Jefferson
Discount Medical & Dental
5125 Folsom
Beaumont, TX 77706
Tel1: 409-899-9194
Tel2: 409-4661822
Email: cautiousscenery@aol.com

Investment

Connie D. Gist
EdwardJones
4414 Dowlen Road, Suite 102
Beaumont, TX 77706
Tel1: 409-896-5852
Toll Free1: 888-368-2620
Toll Free2: 888-898-7188
Website: www.edwardjones.com

Lawn Care

Ava S. Hamilton
B & A Lawn Care Service
P.O. Box 22855
Tel1: 409-866-9399
Tel2: 409-651-9955
Tel3: 409-651-9954

*Michael Alfred
The Garden of Gethsemane
Tel: 409-842-2773

Logistic

*Ray Deshotel
Beaumont Warehouse-Transportation
P.O. Box 20477
Beaumont, TX 77720
Tel: 409-883-9997
Fax: 409-883-4208
Cell: 409-299-0053
Email: ldeshotel@pnx.com

Maintenance

Kenny L. Tims, Sr.- President
KT Maintenance Company, Inc.
800 Proctor Street
Port Arthur, TX 77640
Tel: 409-982-9952
Fax: 409-982-4851
Email: kenny.tims@ktmaintenance.com

Misc.

Clarence C. Jones
M&R Cleaning Services
Tel: 409-833-4535

Delois Roy
Art World
Tel: 409-892-7638

J.M. Kaufman
J.M. Kaufman Materials Co.
Tel: 409-985-4906

James Holmes
James Holmes Enterprises, Inc.
Tel: 409-842-3685

*Toni Prados
Area Impressions Caps & T's
Tel: 409-833-4561
Email: bprados@swbell.net

Office Supply

Howard Giron
Select Business Products
P.O. Box 22741
Beaumont, TX 77720
Tel: 409-866-3224
Fax: 409-866-1401

Pest Control
Colton (Bubba) Moore, Owner
Moore Superior Pest Control, Inc.
Tel: 409-899-1799

Petroleum Testing/Marine Barge/Ship Inspection

* Tiffany Liepke, President
Chemical and Petrochemical Inspections L.P.
5300 39th Street – P.O. Box 387
Groves, TX 77619
409-962-1318
Mobile: 409-460-0484
Email: liepke@cpilaboratory.com
Website: cpilaboratory.com

Photography

Harold's Photography
2705 S. Fourth St
Beaumont, TX 77705

Tel: 409-794-5376
Fax: 409-842-4143
Email: haynes.haynes@sbcglobal.net

Johnny Beatty Barry
Photographer & Videographer
2906 Roberts St.
Beaumont, TX 77701
Tel: 409-842-3903

Sonny Perkins
Sonny's Video
2290 Morrison
Beaumont, TX 77701
Tel: 409-832-9380

Plumbing

A.J.
Martha's Sewage and Drainage Service
2370 Columbia Street
Beaumont, TX 77701
Tel: 409-833-2796

Charles chevis
Joe Simon Plumbing & Heating
Tel: 409-842-0490

News/ Media/ Publications
Angel San Juan
KFDM 6 & WB 10 KWBB
P.O. Box 7128
Beaumont, TX 77726-7128
Tel: 409-895-4661
Fax: 409-892-7305
Email: angels@kfdm.com

Helen Hunter Tubbs
Spotlight Magazine
P.O. Box 41203
Beaumont, TX 77725
Tel: 409-832-3494
Fax: 409-832-6171

Jesse Samuels, Sr.
Cumulus

755 S. 11th Street, Suite 102
Beaumont, TX 77701
Tel: 409-833-9421
Fax: 409-833-9296
Home: 409-983-5404

Jessie Haynes
NAC Publishing- 10 Stupid Things
P.O. Box 22577
Beaumont, TX 77720
Tel: 409-838-2222

Mr. A. B. Bernard
BGI Enterprise
PO Box 22077
Beaumont, TX 77720-2077
Tel: 409-833-0303
Fax: 409-833-0744

Ms. Vicke Frank
KZZB Radio
2531 Calder Ave.
Beaumont, TX 77702
Tel: 409-833-0990
Fax: 281-424-7588

Tracie Payne
CUSH Magazine
P.O. Box 22197
Beaumont, TX 77720
Tel: 409-212-1111
Website: www.cush.com

Purchasing/ Procurement

Odell Wynn
WGN Procurement
2626 South Loop West, Suite 545
Houston, TX 77054
Tel: 713-857-8359

Real Estate

Dr. Kevin Moulton
Synergy International Realty
2955 Laurel St.
Beaumont, TX 77702

Tel: 409-835-1111
Fax: 409-866-5463
Email: drvinnie@sbcglobal.net

Kim Fenner
ERA Team REALTORS
2396 Eastex Freeway
Beaumont, TX 77703
Tel: 409-898-0701
Fax: 409-898-8591
Cell: 409-893-0735
Email: kim.fenner@era.com
Website: www.erateamrealtors.com

Mr. Pat Gibbs
G-Team Real Estate
3229 Washington Blvd.
Beaumont, TX 77705
Tel: 409-832-2500
Fax: 409-832-2515
Email: phgibbs@sbcglobal.net

Mrs. Dee Richard Chavis
Dee Richard Real Estate
999 S. 4th St.
Beaumont, TX 77701
Tel: 409-839-4580
Fax: 409-839-4395
Email: drealestate@gt.rr.com

Mrs. Patricia Beckett White
Dee Richard Real Estate
999 S. 4th St.
Beaumont, TX 77701
Tel: 409-839-4580
Fax: 409-839-4395
Email: drealestate@gt.rr.com

Mrs. Patricia Beckett White
Dee Richard Real Estate
999 S. 4th St.
Beaumont, TX 77701
Tel: 409-839-4580
Fax: 409-839-4395

Email: drealestate@ft.rr.com

Mrs. Willie Mae Thomas
Five Brothers Investments
6140 W. Windemere Dr.
Beaumont, TX 77713
Tel: 409-898-4100
Cell: 409-201-0777
Fax: 409-898-4090
Email: grannysboy4@yahoo.com

Walter Kyles, Jr. & Co.
Insurance- Real Estate- Construction
2875 Washington Blvd
Beaumont, TX 77705
Tel: 409-842-3444
Fax: 409-842-9770
Cell: 409-338-1365
Email: kyles@aol.com

Restaurants

Floyd & Carol Dixon
Southern Delight Restaurant
3195 Washington Blvd.
Beaumont, TX 77705
Tel: 409-840-5025

Frank Owens, Proprietor
Dairy Queen
3755 College St.
Beaumont, TX 77701
Tel: 409-838-4723

Nolan Hines, Jr.
Taste of Orleans
672 Orleans St.
Beaumont, TX 77701
Tel: 409-833-9460
Cell: 409-553-4632
Fax: 409-833-9470
Website: www.tasteoforleansonline.com

Roofing

John & Lawrence
Norman & Norman Roofing
Beaumont, TX

John Tel: 409-454-8586
Lawrence Tel: 409-838-4266

Sanitary Supply

Armstead Price, Owner
MVP Janitorial Inc.
5430 Concord Road, Suite A
P.O. Box 22961-2961
Beaumont, Tx 77720
Tel: 409-347-4100
Cell: 409-454-5100

*S and S – Enterprises
PO Box 1983
Beaumont, TX 77704
Tel: 409-842-0594
Fax: 409-842-0594
Pager: 409-726-3624

The Invisible Armor
Tammy Powell
P.O. Box 22492
Beaumont, TX 77720
Tel: 409-840-9801
Fax: 409-840-9815
Email: www.iarmor.net

Trophies

*Harold Williams & Sherrie Charles
AAA Trophy Shop & Etc.
4570 Highland Ave
Beaumont, TX 77705
Tel: 409-651-6050
Fax: 409-842-6473
Email: aaatrophyshop@yahoo.com

Trucking/Heavy Hauling

Alex J. Jeanmard
J&J Trucking
Tel: 409-833-3026

Erwin Charles
Charles Trucking
Tel: 409-835-5805

Delisa Bean
Dawn Express
2005 Broadway, Suite 113
Beaumont, TX 77702
Tel: 409-212-8222

Frank Patillo
Frank Patillo Trucking
Tel: 409-833-0804

Gerald Castille
G&S Trucking & Mowing
Tel: 409-832-8347

Chris Gobert
Gobert Trucking Company
Tel: 409-838-5079

Jerry P. Bernard
Bernard's Trucking
Tel: 409-842-1259

Joseph Charles
J&P Trucking
Tel: 409-835-3119

Mrs. Shelia M. Mire
W&S Mire Trucking

Roland Eaglin
Roland Eaglin Trucking
Tel: 409-835-0100

Wrecker Services
Mr. Chuck Guillory
Chuck's Wrecker Service
2945 Blanchette Service
Beaumont, TX 77701
Tel: 409-832-8228
Fax: 409-833-8348

Tommy Guillory
Guillory's Wrecker Services
4020 Fannett Rd
Beaumont, TX 77705
Tel: 409-842-5106
Bernard Simon

Mirror Shine & Shoe Repair
657 Park
Beaumont, TX 77701
Tel: 409-835-5722

Exhibit "E"

Jefferson County Abatement Policy

It is understood and agreed that all abatement agreements granted herein shall conform to this abatement policy and to the Texas Tax Code.

EXHIBIT "F" - AFFILIATES OF OWNER

AGENDA ITEM **August 28, 2017**

Consider, possibly approve, authorize the County Judge to execute Property Tax Abatement between Colonial Pipeline LLC and Jefferson County for Property located within the Colonial Pipeline Reinvestment Zone pursuant to Section 312.401, Texas Tax Code.

STATE OF TEXAS §
§
COUNTY OF JEFFERSON §

ABATEMENT AGREEMENT FOR PROPERTY LOCATED IN THE COLONIAL PIPELINE REINVESTMENT ZONE

Pursuant to Section 312.401 of the Texas Tax Code, this Tax Abatement Agreement (hereinafter referred to as the "AGREEMENT") is made and entered into by and between Jefferson County (hereinafter sometimes referred to as "the COUNTY"), and Colonial Pipeline Company LLC (hereinafter sometimes referred to as "COLONIAL" OR "OWNER").

1. RECITALS

WHEREAS, OWNER possesses interests in taxable real property located within the Colonial Pipeline Reinvestment Zone, the designation of which was implemented by the COUNTY by an Order dated August 21, 2017 (hereinafter referred to as the "Reinvestment Zone."

WHEREAS, this AGREEMENT is limited to the project to be constructed by OWNER, on various parcels of land located within the Reinvestment Zone, which is described with particularity in Exhibit "A" attached hereto and which will involve construction of new hydrocarbon storage and distribution facilities and related improvements with an initial investment of $35 million and a potential follow-on investment of $300 million, hereinafter referred to as the "PROJECT"); and

WHEREAS the COUNTY wishes to encourage OWNER to select Jefferson County as the site for the PROJECT; and

WHEREAS, the REINVESTMENT ZONE is an area within Jefferson County, Texas, generally described as being within the Colonial Pipeline Reinvestment Zone, which has been designated by Order of this Court, the legal description for which is attached hereto as Exhibit "C." It is understood and agreed that the Reinvestment Zone boundary is subject to revision based on the final construction plan of the Project, and the County agrees to take the steps necessary to amend the Reinvestment Zone boundary upon request of Company.

NOW, THEREFORE, for the mutual consideration set forth below, the Parties hereto agree as follows:

2. AUTHORIZATION

THIS AGREEMENT IS AUTHORIZED BY THE TEXAS PROPERTY REDEVELOPMENT AND TAX ABATEMENT ACT, TEX. TAX CODE CHAPTER 312, AS AMENDED, AND BY ORDER OF THE JEFFERSON COUNTY COMMISSIONERS COURT ESTABLISHING THE COASTAL CAVERNS REINVESTMENT ZONE, WHICH ADOPTED THE COASTAL CAVERNS REINVESTMENT ZONE.

3. DEFINITIONS

For purposes of this AGREEMENT, the following terms shall have the meanings set forth below:

"Abatement" means the full or partial exemption from ad valorem taxes of the value of certain property located in the REINVESTMENT ZONE designated for economic development purposes.

"Affiliate**"** of any specified person or entity means any other person or entity which, directly or indirectly, through one or more intermediaries, controls, or is controlled by, or is under common control with such specified person or entity. For purposes of this definition, the term "control" (including the terms "controlled by" and "under common control with") means the possession, directly or indirectly, of the power to direct or cause the direction of the management and policies of such person or entity, whether through the ownership of voting securities, by contract or otherwise.

"Base Year Value**"** means the taxable value of all industrial realty improvements owned by the property owner and/or its Affiliates within Jefferson County on January 1 preceding the execution of the abatement agreement. Owner will, in consultation with the Jefferson County Appraisal District, provide the County with a list of the Jefferson County Appraisal District account numbers identifying the industrial realty improvements owned by the property owner and/or its Affiliates and the taxable value thereof on January 1 preceding the execution of the abatement agreement for use in preparing the schedule to be attached as an exhibit to the abatement agreement before execution specifying the Base Year Value for all purposes of the abatement agreement.

"Base year", for the parties to this agreement, is defined as the calendar year in which this abatement contract is executed (signed) by all parties hereto.

"Ineligible Property" is fully taxable and ineligible for tax abatement and includes land, supplies, inventory, housing, vehicles, improvements for the generation or transmission of electrical energy not wholly consumed by a new facility or expansion; any improvements, including those to produce, store or distribute natural gas, fluids or gasses, which are not integral to the operation of the facility; deferred maintenance, property to be rented or leased, property which has a productive life of less than ten years, or any other property for which abatement is not allowed by state law.

"Eligible Property" means the realty improvements, the on-site buildings, structures, fixed machinery and equipment, storage tanks, process units (including all integral components necessary for operations), site improvements, and infrastructure and the permanent office space and related fixed improvements, as defined by the Tax Code but does not include personal tangible property.

"New Eligible Property" means Eligible Property, the construction of which commences subsequent to the effective date of this AGREEMENT. During the construction phase of the New Eligible Property, the OWNER may make such change orders to the New Eligible Property as are reasonably necessary to accomplish its intended use. It is expressly understood that, notwithstanding anything to the contrary written herein, energy, electricity, manufacturing supplies (e.g. foreign manufactured catalysts), feedstocks, freight, and direct materials that physically become a part of the end product manufactured by the PROJECT) are not subject to the terms of this AGREEMENT.

"Taxable Value" for each taxing entity executing an abatement agreement is determined by deducting from the Market Value of all industrial realty improvements of a property owner and/or its affiliates the amount of any applicable exemptions and abatements granted for that Tax Year.

The maximum dollar value for equipment that OWNER intends to claim to the TCEQ as exempt from taxation is fifteen percent (15%) of cost ("Intended Maximum"), though that number could change as current estimated project costs are refined. It is understood that the COUNTY would not have agreed to this abatement percentages if it were known that the actual exempt property claimed by OWNER would exceed the Intended Maximum. In the event OWNER ultimately claims an amount in excess of the Intended Maximum (such amount the "Exempt Property Excess"), the percentage of abatement described in the "Abatement Schedule" shall be reduced pro rata so as to reimburse the COUNTY for the total decrease in County tax revenue during the abatement period beginning on January 1, 2019 which is expected to result from the Exempt Property Excess. It is understood and agreed that OWNER will not seek a tax exemption for any equipment or portion of the facility which merely reduces the pollution characteristics of the finished product produced by the facility and that an exemption will only be sought for equipment and technology utilized to reduce pollution at or around the facility.

"Completion" as used herein, shall mean, the successful commissioning of the PROJECT and the attainment of reliable operations. OWNER shall certify in writing to the COUNTY when such Completion is attained.

"Full-time job", as used herein, shall mean a permanent full-time position that: requires at least 1,600 hours or work per year, is not a transferred from another area of the state, is not created to replace a previous employee, and is covered by a group health benefit plan, and pays at least 110% of the county average weekly wage for manufacturing jobs in Jefferson County.

"Payment in Lieu of Taxes" If, during the period of this abatement, any Federal or State law provides an additional tax exemption for the property that is already the subject of this agreement, Applicant agrees to decline that tax exemption during the period of this abatement. If Applicant is unable to decline that tax exemption, Applicant agrees to pay the taxes, or payment in lieu of taxes, on the reduction of property tax revenue to the County that is the result of said exemption. Any payment in lieu of taxes shall be due on or before November 15 of the year in which payment is due.

4. TERM OF ABATEMENT

This AGREEMENT shall be effective and enforceable upon execution by both parties (which date is herein referred to as the "Effective Date"). The Term of the Abatement pursuant to this AGREEMENT shall begin on January 1, 2019 and shall terminate on December 31, 2024 unless sooner terminated pursuant to other provisions of this AGREEMENT. Should OWNER not begin the construction of the PROJECT by December 31, 2018, this AGREEMENT shall be null and void.

5. OWNER REPRESENTATIONS/OBLIGATIONS

In order to receive a tax abatement with respect to a tax year listed on the Tax Abatement Schedule (EXHIBIT "A"), OWNER shall comply with the following:

a. As a result of the PROJECT, and upon its Completion (currently estimated to be not later than:

the first quarter, 2019, maintain a level of not less than three (3) new full-time jobs, using headcount as of June 30, 2017 as the starting point, relating to the PROJECT during the remaining term of this AGREEMENT; provided, however that OWNER may reduce employment levels due to improved efficiencies or changing economic conditions during the term of this AGREEMENT as long as such employment levels do not fall below 3 full-time jobs for total on site employment by owner during said term. In the event that such employment falls below 3 full-time jobs for total on site employment, Abatement shall be reduced proportionate to such employment decline beginning with the tax year in which the decline occurs and each tax year thereafter per the example calculation cited below where:

A1 = initial Abatement $s
A2 = revised Abatement $s
E1 = 3 full-time jobs
E2 = revised employee count

$$A2 = A1 \times (E2/E1)$$

b. Report and certify the requisite job levels to the COUNTY, annually during each tax year under this AGREEMENT;

c. Construct the PROJECT with an estimated investment in excess of $35,000,000. If COMPANY does not commence construction of the follow-on investment of at least $300 million by December 31, 2021, COUNTY reserves the right to adjust the tax abatement schedule for the remaining years of this Agreement to reflect a schedule that is consistent with the investment and job creation.

d. Make available to the COUNTY information concerning the details of contractor bids, every quarter, during the construction phase of the PROJECT under the express understanding that COMPANY is providing the COUNTY such contractor bid information on a strictly confidential basis so as to maintain the integrity of the competitive bid process;

e. Report and certify to the COUNTY the requisite cost of the PROJECT within 120 days after the completion of the PROJECT (or 120 days after the Effective Date, whichever is later);

f. Ensure that qualified local labor, vendors, suppliers, and sub-contractors are given a timely opportunity to bid on contracts for the provision of supplies, goods and services (including engineering and construction services, *e.g.*, piping, electrical, civil, fabrication) in connection with construction of the PROJECT and any turnaround project which is undertaken as part of or in connection with the PROJECT during the term of the abatement period. Such consideration shall be made in good faith without discrimination. For purposes of the foregoing:

(i) "Local labor" is defined as those qualified laborers or craftsmen who are residents and domiciliaries of the nine county regions comprised of Jefferson, Orange, Hardin, Jasper, Newton, Liberty, Tyler and Chambers Counties, as well as the Bolivar Peninsula area of Galveston County. "Local vendors" and "local suppliers" shall include only those located or having a principal office in Jefferson County. "Local subcontractors" shall include only those located or having a principal office in Jefferson County.

(ii) OWNER agrees to give preference and priority to local manufacturers, suppliers, vendors, contractors and labor, except where not reasonably possible to do so without significant added expense, substantial inconvenience, or sacrifice in operating efficiency. For any such exception in cases involving purchases over $1 million, a justification for such purchase shall be included in OWNER'S annual letter of compliance. OWNER further acknowledges that it is a contractual obligation, under this agreement, of persons receiving property tax abatements to favor local manufacturers, suppliers, contractors, and labor, all other factors being equal. In the event of a breach of this "buy local" provision, OWNER agrees that

the percentage of abatement shall be proportionately reduced in an amount equal to the amount the disqualified contract bears to the total construction cost for the PROJECT.

ii) OWNER agrees to provide bidding information to local qualified contractors, vendors, manufacturers and labor to allow them to have sufficient information and time to submit their bids, and pre-bid meetings shall be held between OWNER and potential local bidders and suppliers of services and materials. Owner agrees that he will provide sufficient notice and information regarding to project to qualified local contractors to enable them to submit bids for materials in the early procurement processes.

g. Report and certify to the COUNTY, quarterly the total number of dollars spent on local labor, local subcontractors and local vendors/suppliers in connection with the PROJECT.

h. Owner will invoice purchases locally to ensure that sales tax is credited to the benefit of Jefferson County, Texas.

i. Not in any way discriminate against or treat disparately union contractors who choose to participate in the competitive bid process relating to work on the PROJECT, nor discriminate against or treat disparately union members who seek employment on the PROJECT; and

j. Encourage and promote the utilization of Historically Underutilized Businesses (HUBs) (also known as Disadvantaged Business Enterprises, or DBEs) by the general contractor engaged by OWNER to construct the PROJECT and any turnaround project which is undertaken as part of or in connection with the PROJECT during the term of the abatement period by ensuring qualified HUB/DBE vendors and contractors are given a timely opportunity to bid on contracts for supplies and services. For purposes of the foregoing:

(i) A HUB/DBE is a business owned or controlled by Socially and Economically Disadvantaged Individuals as defined by all applicable federal or state laws and local policies, including Black Americans, Hispanic Americans, Native Americans, Asian-Pacific Americans, Asian Indian Americans, women, and individuals with disabilities.

(ii) A HUB/DBE is one that is at least 51 percent owned or controlled by one or more women or Socially and Economically Disadvantaged Individuals or, in the case of a publicly-owned business, one that at least 51 percent of the stock of which is controlled by one or more women or Socially and Economically Disadvantaged Individuals.

(iii) A business that has been certified as a HUB/DBE by an agency of the federal government or the State of Texas is presumed to be a HUB/DBE for purposes of Agreement.

(iv) Only a HUB/DBE with its principal office in the State of Texas will be recognized as a HUB/DBE for purposes of this Agreement. A list of HUB/DBE vendors/suppliers is maintained in the COUNTY office and a list of same is attached hereto as Exhibit D. As to the use of qualified local and HUB/DBE vendors, suppliers and sub-contractors, OWNER will, at a minimum:

k. Consult with chambers of commerce, minority business associations, trade associations and other regional economic development organizations to identify local and HUB/DBE vendors, suppliers and sub-contractors;

l. Notify qualified local and HUB/DBE vendors, suppliers and sub-contractors, allowing sufficient time for effective preparation of bids for the planned work to be sub-contracted or materials, supplies or equipment to be purchased;

m. Provide qualified local and HUB/DBE vendors, suppliers and sub-contractors who are interested in bidding on a subcontract or contract for materials, supplies, equipment, or the provision of engineering and construction services and labor adequate information regarding the project as early as is practicable in the bidding process in order to allow the HUB/DBE vendors, suppliers and sub-contractors sufficient time to prepare a bid *(i.e.*, plans, specifications, scope of work, bonding and insurance requirements, and a point of contact within the general/prime contractor);

n. Negotiate in good faith with interested qualified local and HUB/DBE vendors, suppliers or sub-contractors, and award sub-contracts or contracts for materials, supplies equipment, or the provision of engineering and construction services and labor to local or HUB/DBE vendors, suppliers or sub-contractors when they are the lowest qualified responsive bidder who meets all of the applicable bid specifications; and

o. Include a provision in OWNER'S contract with the general/prime contractor on the PROJECT which requires the general/prime contractor to read and comply with the terms of this AGREEMENT relating to the use of union or non-union, local and HUB/DBE vendors, suppliers or sub- contractors.

6. VALUE OF ABATEMENT

For each year under this Agreement, the abatement percentage received by OWNER under this AGREEMENT with respect to the value of New Eligible Property, is set forth on attached Exhibit: "Tax Abatement Schedule".

The Abatement during each year covered by this Agreement shall be the value attributable to the Project multiplied by Abatement Schedule, adjusted by the Base Year Value.

7. QUARTERLY MONITORING MEETINGS

With respect to the quarterly monitoring meetings referenced in Section 5(d) above, the County Judge, County Commissioners, or their designee(s) shall be allowed to attend such quarterly monitoring meetings, on the express condition that they execute a confidentiality agreement prepared by OWNER so as to protect confidential information which may be disclosed to them during or as a result of such monitoring meetings. OWNER agrees to reimburse the COUNTY in an amount not to exceed to $4,000.00 annually for the costs or expenses actually incurred by the COUNTY in monitoring the status of the bidding process every quarter during the construction phase of the PROJECT.

8. TAXABILITY

During the period that this AGREEMENT is effective, taxes shall be payable as follows:

a. The value of Ineligible Property shall be fully taxable;

b. The Taxable Value of existing Eligible Property as determined each shall be fully taxable; and

c. The value of New Eligible Property shall be abated as set forth in Section 6, hereinabove.

9. ADJUSTMENTS TO ABATEMENT FOR BASE YEAR VALUE DECLINE

The Jefferson County Central Appraisal District will establish the certified values of Eligible Property as of January 1, 2017, (year abatement executed) as set forth on attached Exhibit "B"," and such values shall be the values used to calculate the Base Year Value as herein defined. If on January 1st of any tax year listed on the "Tax Abatement Schedule" the Taxable Value is less than the Base Year Value, then the abatement of value otherwise available shall be reduced by one dollar for each dollar that the Taxable Value of realty improvements is less than the Base Year Value, except that no such reduction of Owner's abatement shall be made should any reduction to Taxable Value of Owner's Eligible Property result from a Force Majeure event.

In the event the Owner reduces its ad valorem taxes on personal property otherwise payable to the County by participating in a foreign trade zone, then the amount of abated value otherwise available shall be reduced by one dollar for each dollar of tax value reduction attributable to special treatment from trade zone participation. The parties hereto stipulate and agree that the certified appraisal value for this property, as calculated by the Jefferson Central Appraisal District, shall apply.

It is specifically understood and agreed by the owner that, if at any time during the effective dates of an agreement relating to abatement, the owner files or prosecutes an action to contest the appraised value of any property of the owner or owner's affiliates within Jefferson County for unequal appraisal or revision thereof pursuant to Sec. 42.26, Texas Tax Code, any and all abatements granted by County to Owner or its affiliates shall become null and void and cancelled.

10. POLLUTION CONTROL EXEMPTION

The COUNTY understands that OWNER plans (i) to request from the TCEQ a determination under Section 11.31 of the Texas Tax Code that certain property included in the New Eligible Property is pollution control property, and (ii) to apply for an exemption from ad valorem taxes under Section 11.31 of the Texas Tax Code with respect to all or a portion of such property determined by the TCEQ to be pollution control property. OWNER represents that the exempt value of such pollution control property will not exceed fifteen percent (15%) of the value of the Project in any year of Abatement under this AGREEMENT. OWNER agrees that in the event the exempt value of such pollution control property exceeds fifteen percent (15%) of the value of the Project in any year of Abatement under this AGREEMENT, the abated value will be reduced accordingly.

11. EVENT OF DEFAULT

If either party should default in performing any obligation under this AGREEMENT, the other party shall provide such defaulting party written notice of default and provide the defaulting party with a minimum period of thirty (30) days to cure such default prior to instituting an action for breach or pursuing any other remedy for default, provided however, that, if the default is of such a nature that it cannot, with the exercise of reasonable diligence, be cured within thirty (30) days, then such party shall not be in default so long as such party has commenced such cure within thirty (30) days after receiving written notice of such default and is diligently prosecuting such cure to completion. Subject to providing such notice of default and the aforesaid opportunity to cure same, the party aggrieved by default shall have the right to terminate this AGREEMENT and to pursue any remedy available at law or in equity, for breach hereof. In addition, if a party (the "Affected Party") shall become unable to timely perform any of its obligations under this AGREEMENT, other than any obligation to pay money, as a consequence of a Force Majeure Event, the Affected Party shall be relieved of such obligation (and such failure to timely perform such obligation shall not constitute a default) to the extent that and for so long as (but only to the extent that and only for so long as) it is unable to timely perform such obligation as a consequence of such Force Majeure Event. A "Force Majeure Event" means any of the following: (a) acts of God, earthquakes, tidal waves, lightning, floods, and storms; (b) explosions and fires; (c) strikes and lockouts; (d) wars, riots, acts of the public enemy, civil disturbances, hostilities, sabotage, blockades, insurrections, terrorism, and epidemics; (e) acts of expropriation, confiscation, nationalization, requisitioning, or other taking; and (f) any other event, condition, or circumstance beyond the reasonable control of the party

claiming relief as a consequence thereof; provided, however, that "Force Majeure Event" does not include the inability to make payment or financial distress.

12. ASSIGNMENT

OWNER may assign this AGREEMENT, in whole or in part, to a new owner or lessee of the same PROJECT, or a portion thereof, or to an Affiliate of OWNER upon written approval by resolution of the COMMISSIONERS COURT of such assignment, and approval shall not be unreasonably withheld or delayed. It shall not be unreasonable for the COURT to withhold approval if OWNER or the proposed assignee is liable to the COUNTY for outstanding taxes or other obligations.

13. ENTIRE AGREEMENT

The Parties agree that this AGREEMENT contains all of the terms and conditions of the understanding of the Parties relating to the subject matter hereof. All prior negotiations, discussions, correspondence and preliminary understandings between the parties and others relating hereto are superseded by the AGREEMENT.

14. SUCCESSORS AND ASSIGNS

This AGREEMENT shall be binding on and inure to the benefit of the parties, their respective successors and assigns. OWNER may not assign all or part of its rights and obligations hereunder without the prior written consent of the COUNTY, which shall not be unreasonably withheld or delayed. It shall not be unreasonable to withhold consent to assignment if OWNER or the proposed assignee(s) is/are delinquent in the payment of any ad valorem taxes.

15. NOTICE

Any notice and/or statement required and permitted to be delivered shall be deemed delivered by depositing same in the United States mail, certified with return receipt requested, postage prepaid, addressed to the appropriate party at the following addresses:

COMPANY: J. Keith Fuqua
Indirect Tax Manager
Colonial Pipeline Company
1185 Sanctuary Parkway, Suite 100
Alpharetta, Georgia 30009

COUNTY: Hon. Jeff R. Branick, County Judge
Jefferson County Texas
P.O. Box 4025
Beaumont,Texas 77704
(409) 835-8466

(409) 839-2311 (facsimile)

With a copy to: Ms. Kathleen Kennedy, Chief Civil Attorney
Criminal District Attorney
1149 Pearl Street, 3rd Floor
Beaumont, Texas 77701
(409) 835-8550
(409) 835-8573 (facsimile)

Mr. Fred L. Jackson,
First Assistant: Staff Attorney
Jefferson County Courthouse
P. O. Box 4025,
Beaumont, Texas 77704
(409) 835-8466
(409) 839-2311 (facsimile)

16. MERGER

The Parties agree that this AGREEMENT contains all of the terms and conditions of the understanding of the parties relating to the subject matter hereof. All prior negotiations, discussions, correspondence and preliminary understandings between the parties and others relating hereto are superseded by this AGREEMENT.

17. INTERPRETATION

The Parties acknowledge that both have been represented by counsel of their choosing in the negotiation and preparation of the AGREEMENT. Regardless of which party prepared the initial draft of this AGREEMENT, this AGREEMENT shall, in the event of any dispute over its meaning or application, be interpreted without reference to the principle of construction favoring the party who did not draft the AGREEMENT under construction.

18. APPLICABLE LAW AND VENUE

This AGREEMENT is made, and shall be construed and interpreted under the laws of the State of Texas and venue shall lie in Jefferson County, Texas.

19. SEVERABILITY

In the event any provision of this AGREEMENT is illegal, invalid, or unenforceable under present or future laws, then, and in that event, it is the intention of the Parties hereto that the remainder of this AGREEMENT shall not be affected thereby, and it is also the intention of the Parties to this AGREEMENT that in lieu of each clause or provision that is found to be illegal, invalid, or unenforceable, a provision be added to this

AGREEMENT which is legal, valid, and enforceable and is as similar in terms as possible to the provision found to be illegal, invalid or unenforceable.

Executed in duplicate this the 28th day of August, 2017.

FOR THE COUNTY:

Hon. Jeff R. Branick, County Judge
Jefferson County, Texas

FOR THE COMPANY:

By:

EXHIBIT A "Description of Project"

The proposed project is the first of a proposed two-phase project. This Agreement addresses only Phase 1, expansion of capacity at Colonial's Hebert Station, and will involve Colonial constructing connectivity to a new pipeline, which would allow Colonial to deliver gasoline via the pipeline to area terminals. The new connectivity will

create the capability to pump and measure up to 53,000 BPH of gasoline. The project will represent an investment of $35 million and the creation of three (3) new permanent jobs.

Phase 2 is still tentative and will be the subject of a separate Chapter 312 Tax Abatement Agreement.

"Tax Abatement Schedule"

Tax Year	Abatement Percentage
1. 2019	100 %

2.	2020	100 %
3.	2021	80 %
4.	2022	80%
5.	2023	60%
6.	2024	60%

EXHIBIT B "Base Year Property"

This base year taxable value as certified will be attached, by consent of the parties, when same is calculated and adopted by the Jefferson County Appraisal District.

EXHIBIT C – "Reinvestment Zone"

"

EXHIBIT D – "List of HUB/ DBE Companies"

Minority Business Directory

*** Indicates certification as a HUB/DBE has been obtained**

Accountants/ Certified Public

ComPRO Tax
Denise White
2720 N. 11th Street
Beaumont, TX 77703
Tel: 409-924-7777
Fax: 409-924-0610
Website: www.comprotax.com

Fedric Zeno, Sr.
ComPRO Tax, Inc.
2905 Laurel Ave.
Beaumont, TX 77703
Tel: 409-832-1099
Fax: 409-832-2108
Home: 409-840-5129
Email: zenoandassociate@aol.com

Gayle Botley
Botley & Associates, CPA's
Tel: 409-833-8757

Joanne Spooner
South Park ComPRO Tax
4390 Highland Avenue
Beaumont, TX 77705
Tel: 409-832-8299
Fax: 409-832-1661
Website: www.comprotax.com

*Stephanie Clark
The Ann Group
2700 Blanchette St. (01)
Tel: 409-813-3696
Fax: 409-813-3404
Email: sclark@theanngroup.com

Mr. Yusuf Muhammad
ComPRO Tax
999 S. 4th St.
Beaumont, TX 77701
Tel: 409-832-3565
Fax: 409-832-2252
Website: www.comprotax.com

Ms. Margaret Bostic
That Too
Tel: 409-842-6966

Advertising & Public Relations

Jessie Haynes & Associates
P.O. Box 22577
Beaumont, TX 77720
Tel: 409-838-2222
Website: www.haynespr.com

Texas Black Pages
P.O. Box 22577
Beaumont, TX 77720
Tel: 409-838-2222
Website: www.texasblackpages.com

Agricultural

Lloyd J. Hebert
Cooperative Extension Program
1295 Pearl St
Beaumont, TX 77701
Tel: 409-835-8461
Cell: 409-351-1331

Air Conditioning Repair

Big-O Air Conditioning & Heating
1370 Lavaca
Beaumont, TX 77705
Tel: 409-833-4817
Cell: 409-656-0827

J&W A/C Heating
Ivory Joe Harris
5465 Emerald Dr.
Beaumont, TX 77705
Tel: 409-842-2389

Jon D. Welch
Coushatta
P.O. Box 13071
Beaumont, TX 77726
Tel: 409-899-2552
Email: jon@coushatta-services.com
Website: www.coushatta-services.com

LanLos Appliance & Air Conditioning Repair
P.O. Box 5513
Beaumont, TX 77726
Tel: 409-724-4101

Villery's
Refrigeration & Air Conditioning Service
Tel: 409-838-2233

Barbecue/ Caterers

Charlie Dean
Dean's Bar-B-Q & Catering
805 Magnolia
Beaumont, TX 77701
Tel: 409-835-7956

Eugene Sam
Tillmans Barbecue Pit
1104 Sherman St
Beaumont, TX 77701
Tel: 409-838-5592

Gerard's Barbecue Diner
3730 Fannett Rd
Beaumont, TX 77705
Tel: 409-842-9135

Jack Patillo Barbecue
2775 Washington Blvd.
Beaumont, TX 77705
Tel: 409-833-3154

Leonard Broussard
Broussard's Bar-B-Q
2930 S. 11th Street
Beaumont, TX 77701
Tel: 409-842-1221

*Mouton's Catering
3845 Washington Blvd
Beaumont, TX 77705
Tel: 409-842-4933

Carpet/ Flooring

*Alton & Michelle Babineaux
Bab's Carpet
4940 Highland Ave.
Beaumont, TX 77705
Tel: 409-833-7484
Fax: 409-790-4218

Delores Fruge
Power Stretch Carpet
502 S. 4th St.
Beaumont, TX 77701
Home: 409-832-8626
Cell1: 409-617-1862
Cell2: 409-338-9907
Fax: 409-833-3230

Raymon and Sharonne Morris
Morris and Morris Floor Covering
4515 Ironton
Beaumont, TX 77703
Home: 409-833-5011
Tel: 409-553-9861

Computer Service & Repair

Chris Martin
601 Woodworth
Port Arthur, TX 77642
Tel1: 409-982-3528
Tel2: 409-982-3529

David Leaven / Marcus Frank
F & L Computer Solutions
P.O. Box 328-A
Winnie, TX 77665
Tel: 409-351-1256

Consultant

Felicia Young, Owner
Five Star Business Solutions
Tel: 409-466-6038

Contractors /Construction Services/Community Development/ Home Builders

Al Armstrong
SEATECH
3227 Highland Ave
Beaumont, TX 77701
Tel: 409-350-5620

Albert Ceaser
CMM Construction
Tel 409-842-1250

Arthur Limbrick, Sr.
Lim Construction, Inc.
Commercial & Residential Building
4935 Fannett Road
Beaumont, TX 77705
Tel: 409-842-9765
Fax: 409-842-9141
Cell: 409-338-0832

*Bruce's General Construction, Inc.
1175 Reynolds Rd
Beaumont, TX 77707
Tel: 409-866-6245

Celestine's Construction
510 Palm St.
Beaumont, TX 77705
Tel: 409-832-1342

*Christene Sonnier
Coastal Industrial Services, Inc.
P.O. Box 158
Port Neches, TX 77651
Tel: 409-736-3797
Cell: 409-728-5072

205 West Hwy 365, Ste. A
Port Arthur, TX 77640
Fax: 409-736-2270
Email: www.coastaltxs@aol.com

Cornelius Harris
Alamo Contractors

Don LaFleur
Don LaFleur Construction & Homes
5681 Eastex Freeway
Beaumont, TX 77708
Tel: 409-347-0593

Donald Ray Wise

Wise Barricades
Tel: 409-835-5113

Eddie Senigaur
Senigaur Home Builder & General Contractor
3196 Washington Blvd.
Beaumont, TX 77705
Tel: 409-842-5220
Fax: 409-842-2983

Jerry Ball- VP
EnviroTech Services LLC
Southeast Texas Division
3024 Commerce St.
Port Arthur, TX 77642
Tel: 409-790-5910
Toll Free: 800-286-3695
Email: jerry.ball@osfinc.net

*Joshua Allen
J. Allen contractors, Inc.
Tel: 409-833-8947
Email: office@jallenmgmt.com

Lloyd Broussard
EnviroTech Services, LLC
4002 Caroline Street
Houston, TX 77004
Tel: 713-551-6671

Ernestine Wade
Gulf Coast Industrial Contractors, Inc.
Tel: 409-842-1522

Joe Wheaton
Joe Wheaton Construction Co.

Johnny Casmore
Builders, Inc.
7295 Ellen Lane
Beaumont, TX 77708
Tel: 409-892-2223
Fax: 409-466-1251

Joseph D. Deshotel
DEZ-TEX Construction, Inc.
Tel: 409-842-4844

*Kenny Timms
KT Maintenance
Tel: 409-982-9952
Email: Kenny.tims@ktmaintenance.com

Mr. Vories Lornette, Sr.
Faith Construction
Tel: 409-794-2615

Mr. Matt Hopson
Southeast TX Community Development
1460 Gladys
Beaumont, TX 77701
Tel: 409-835-7527
Fax: 409-835-1680
Email: mhopson@setcdc.org

Mrs. Antoinette J. Hardy
Beaumont Community Development
505 E. Florida
Beaumont, TX 77705
Tel: 409-813-2158
Fax: 409-813-2165
Email: ahardy1969@yahoo.com

Ms. Mary Randall
J&M construction
Tel: 409-842-0967

Naomi Lawrence-Lee
CNB Development Group
Tel: 409-767-8037
Email: nlee@cnbhomes.com

Ories Holmes
Ories Holmes Construction
Tel: 409-842-3943

Paul Buxie
Buxie Builders
Tel: 409-833-2028

Perkins brown
Brown Fencing & construction
Tel: 409-833-1533

R. Anthony Lewis II
Custom Home Design & Building
Tel: 409-839-4735

Ray Marsh
RAM Contracting Services
Tel: 214-597-0541
Email: ray@rammep.com

Richard Gilbert / Bruce Dunbar
Owner / Superintendent
GP Realty Building Co.
648 Orleans
Beaumont, TX 77701
Richard Tel: 281-895-7773
Bruce Tel: 409-454-6356
Fax: 409-835-6775

*Roosevelt Petry
GP Industrial Contractors, Inc.
rpetry@gpic2000.com
Port Arthur, TX 77640
Tel: 281-850-8889

Steve Andrus
Andrus Construction
Beaumont, TX 77703
Home: 409-835-4397
Work: 409-835-8629
Cell: 409-466-1860

William Kenebrew, Sr.
Kenebrew Masonary
Tel: 409-866-3310

Commodities

*Loma George
LG Supplies
9545 Riggs Street
Beaumont, TX 77707
lomageorge@att.net
Tel: 409-782-4086

Copy Services

Jeanette Rideau
Reliable Copy Service
2498 Washington Blvd –B
Beaumont, TX 77705
Tel: 409-835-1218
Fax: 409-838-0064
Email: jeanetteRCS@sbcglobal.net

Council

Beverly L. Hatcher- President
Golden Triangle Minority Council, Inc.
P.O. Box 21664
Beaumont, TX 77720-1664
Tel: 409-962-8530
Fax: 409-898-8077
Email: gtmbc@ih2000.net
Website: www.gtmbc.com

Electrical/ Mechanical Contractors

Calvin Walker
Walker's Electric Company
2916 Magnolia Street
Beaumont, TX 77703
Tel: 409-212-9244
Fax: 409-212-9245

*Gregory T. Johnson, Sr.
GJETCO
P.O. Box 22735
Beaumont, TX 77720
Tel: 409-866-3829
Fax: 409-866-6962

*Joseph C. Ledet, III
Ledet Electrical Services
Tel: 409-896-5471
Cell: 409-791-1366

Ray Marsh
RAM Electrical & Mechanical Contractors
3467 Elinor
Beaumont, TX 77705
Cell: 214-597-0541
Fax: 972-539-2422
Email: ray@ram4mep.com

Employment Services

Imogene Chargois
Texas Workforce Centers of Southeast Texas
304 Pearl Street
Beaumont, TX 77701
Tel: 409-839-8045
Fax: 409-835-0774
Email: imogene.chargois@setworks.org

*Luis G. Silva
Silva Employment Network
2901 Turtle Creek Drive, Suite 205
Port Arthur, TX 77642
Tel: 409-727-4024
Fax: 409-727-4094
Email: lgsilva1940@aol.com

Energy

Syed Mohiuddin
Apex Petroleum & Energy Xpress, LLC
The Apex Plaza
9100 SW Freeway, Suite 201
Houston, TX 77074
Tel: 713-541-2755
Fax: 713-541-5535
Website: www.syed@apexgroupofcompaines.com

Engineers

*Andy Chica
Chica & Associates Inc.
595 Orleans, Suite 508
Beaumont, TX 77701
Tel: 409-833-4343

Sina K. Nejad, P.E.
Sigma Engineers, Inc.
4099 Calder Avenue
Beaumont, TX 77706
Tel: 409-898-1001
Fax: 409-898-3420
Email: mail@sigmaengineers.com

Environmental

Bennard L. Nelson, Jr.
Legacee Environmental
6001 Savoy, Suite 204
Houston, TX 77035
Tel: 713-218-8647
Fax: 713-218-8649
Email: bnelson@legaceenvironmental.com

* Tiffany Liepke, President
Chemical and Petrochemical Inspections L.P.
5300 39th Street – P.O. Box 387
Groves, TX 77619
409-962-1318
Mobile: 409-460-0484
Email: liepke@cpilaboratory.com
Website: cpilaboratory.com

Florists- Retail

Mr. Walter McCloney
McCloney Florist
2690 Park St
Beaumont, TX 77701
Tel: 409-838-6861
Fax: 409-838-0085
Email: waltermccloney@sbcglobal.net

Home Repair & Maintenance

Clinton Ford
Clint's Maintenance and Repairs
8345 Lawrence Drive
Beaumont, TX 77708
Tel: 409-899-4547

Industrial Consultant

B.D. Belvin and Assoc.
Consulting Business Development
9692 Westhiemer Rd., Suite 83
Houston, TX 77063
Tel: 512-789-8178
Email: david@bdbelvin.com
Website: www.bdbelvin.com

Glenn J. Walters
Home Sweet Home Enterprise, Inc.
5212 Culpepper PL
Wesley Chapel, FL 33544
Tel: 813-907-9499
Cell: 813-503-8896
Fax: 813-994-9557
Email: glennjwalters@aol.com

Insurance

Bobby L. Holmes
Farmers Insurance Group
1120 Woodworth Blvd.
Port Arthur, TX 77640
Tel: 409-982-1200
Fax: 409-982-1300
Email: bholmes@farmeragent.com

Byron Lewis
LRC Insurance, Inc.
190 S. Dowlen Road
Beaumont, TX 77707
Tel: 409-866-7073
Cell: 409-466-3664
Email: lrcinsurance@yahoo.com

Charles E. Taylor
Farmers Insurance Group
3355 Washington Blvd.
Beaumont, TX 77705
Tel: 409-842-8300
Home: 409-866-8412
Email: mrcharlestaylor@cs.com

O'Dell E. Harmon
A & M Marketing
595 Orleans, Suite 1128
Beaumont, TX 77701
Tel: 409-466-2533
Email: odharm21@yahoo.com
Website: www.coloniallife.com

Lora Brooks Francis
Insurance Medical Services, Inc.
8100 Lemon Tree Court
Port Arthur, TX
Tel & Fax: 409-722-0077

Cell: 409-289-0945

Mark A. Williams
Protectors Insurance & Financial Services
2600 South Loop West, Suite 520
Houston, TX 77054
Tel: 832-347-6080
Fax: 713-660-9977
Email: mwilliams@protectorinsurance.com

Mr. Lawrence Evans
Farmers Insurance Co.
3355 Washington Blvd.
P.O. Box 22897
Beaumont, TX 77720
Tel: 409-842-8300
Fax: 409-842-8304
Email: levansinsurance@msn.com

Tarik Cooper
Frank and Cooper, Inc.
125 IH 10 North Street, Suite 410
Beaumont, TX 77707
Tel: 409-284-5341
Cell: 409-939-0247

Thelma Jefferson
Discount Medical & Dental
5125 Folsom
Beaumont, TX 77706
Tel1: 409-899-9194
Tel2: 409-4661822
Email: cautiousscenery@aol.com

Investment

Connie D. Gist
EdwardJones
4414 Dowlen Road, Suite 102
Beaumont, TX 77706
Tel1: 409-896-5852
Toll Free1: 888-368-2620
Toll Free2: 888-898-7188
Website: www.edwardjones.com

Lawn Care

Ava S. Hamilton
B & A Lawn Care Service
P.O. Box 22855
Tel1: 409-866-9399
Tel2: 409-651-9955
Tel3: 409-651-9954

*Michael Alfred
The Garden of Gethsemane
Tel: 409-842-2773

Logistic

*Ray Deshotel
Beaumont Warehouse-Transportation
P.O. Box 20477
Beaumont, TX 77720
Tel: 409-883-9997
Fax: 409-883-4208
Cell: 409-299-0053
Email: ldeshotel@pnx.com

Maintenance

Kenny L. Tims, Sr.- President
KT Maintenance Company, Inc.
800 Proctor Street
Port Arthur, TX 77640
Tel: 409-982-9952
Fax: 409-982-4851
Email: kenny.tims@ktmaintenance.com

Misc.

Clarence C. Jones
M&R Cleaning Services
Tel: 409-833-4535

Delois Roy
Art World
Tel: 409-892-7638

J.M. Kaufman
J.M. Kaufman Materials Co.
Tel: 409-985-4906

James Holmes
James Holmes Enterprises, Inc.
Tel: 409-842-3685

*Toni Prados
Area Impressions Caps & T's
Tel: 409-833-4561
Email: bprados@swbell.net

Office Supply

Howard Giron
Select Business Products
P.O. Box 22741
Beaumont, TX 77720
Tel: 409-866-3224
Fax: 409-866-1401

Pest Control
Colton (Bubba) Moore, Owner
Moore Superior Pest Control, Inc.
Tel: 409-899-1799

Petroleum Testing/Marine Barge/Ship Inspection

* Tiffany Liepke, President
Chemical and Petrochemical Inspections L.P.
5300 39th Street – P.O. Box 387
Groves, TX 77619
409-962-1318
Mobile: 409-460-0484
Email: liepke@cpilaboratory.com
Website: cpilaboratory.com

Photography

Harold's Photography
2705 S. Fourth St
Beaumont, TX 77705

Tel: 409-794-5376
Fax: 409-842-4143
Email: haynes.haynes@sbcglobal.net

Johnny Beatty Barry
Photographer & Videographer
2906 Roberts St.
Beaumont, TX 77701
Tel: 409-842-3903

Sonny Perkins
Sonny's Video
2290 Morrison
Beaumont, TX 77701
Tel: 409-832-9380

Plumbing

A.J.
Martha's Sewage and Drainage Service
2370 Columbia Street
Beaumont, TX 77701
Tel: 409-833-2796

Charles chevis
Joe Simon Plumbing & Heating
Tel: 409-842-0490

News/ Media/ Publications

Angel San Juan
KFDM 6 & WB 10 KWBB
P.O. Box 7128
Beaumont, TX 77726-7128
Tel: 409-895-4661
Fax: 409-892-7305
Email: angels@kfdm.com

Helen Hunter Tubbs
Spotlight Magazine
P.O. Box 41203
Beaumont, TX 77725
Tel: 409-832-3494
Fax: 409-832-6171

Jesse Samuels, Sr.
Cumulus

755 S. 11th Street, Suite 102
Beaumont, TX 77701
Tel: 409-833-9421
Fax: 409-833-9296
Home: 409-983-5404

Jessie Haynes
NAC Publishing- 10 Stupid Things
P.O. Box 22577
Beaumont, TX 77720
Tel: 409-838-2222

Mr. A. B. Bernard
BGI Enterprise
PO Box 22077
Beaumont, TX 77720-2077
Tel: 409-833-0303
Fax: 409-833-0744

Ms. Vicke Frank
KZZB Radio
2531 Calder Ave.
Beaumont, TX 77702
Tel: 409-833-0990
Fax: 281-424-7588

Tracie Payne
CUSH Magazine
P.O. Box 22197
Beaumont, TX 77720
Tel: 409-212-1111
Website: www.cush.com

Purchasing/ Procurement

Odell Wynn
WGN Procurement
2626 South Loop West, Suite 545
Houston, TX 77054
Tel: 713-857-8359

Real Estate

Dr. Kevin Moulton
Synergy International Realty
2955 Laurel St.
Beaumont, TX 77702

Tel: 409-835-1111
Fax: 409-866-5463
Email: drvinnie@sbcglobal.net

Kim Fenner
ERA Team REALTORS
2396 Eastex Freeway
Beaumont, TX 77703
Tel: 409-898-0701
Fax: 409-898-8591
Cell: 409-893-0735
Email: kim.fenner@era.com
Website: www.erateamrealtors.com

Mr. Pat Gibbs
G-Team Real Estate
3229 Washington Blvd.
Beaumont, TX 77705
Tel: 409-832-2500
Fax: 409-832-2515
Email: phgibbs@sbcglobal.net

Mrs. Dee Richard Chavis
Dee Richard Real Estate
999 S. 4th St.
Beaumont, TX 77701
Tel: 409-839-4580
Fax: 409-839-4395
Email: drealestate@gt.rr.com

Mrs. Patricia Beckett White
Dee Richard Real Estate
999 S. 4th St.
Beaumont, TX 77701
Tel: 409-839-4580
Fax: 409-839-4395
Email: drealestate@gt.rr.com

Mrs. Patricia Beckett White
Dee Richard Real Estate
999 S. 4th St.
Beaumont, TX 77701
Tel: 409-839-4580
Fax: 409-839-4395

Email: drealestate@ft.rr.com

Mrs. Willie Mae Thomas
Five Brothers Investments
6140 W. Windemere Dr.
Beaumont, TX 77713
Tel: 409-898-4100
Cell: 409-201-0777
Fax: 409-898-4090
Email: grannysboy4@yahoo.com

Walter Kyles, Jr. & Co.
Insurance- Real Estate- Construction
2875 Washington Blvd
Beaumont, TX 77705
Tel: 409-842-3444
Fax: 409-842-9770
Cell: 409-338-1365
Email: kyles@aol.com

Restaurants

Floyd & Carol Dixon
Southern Delight Restaurant
3195 Washington Blvd.
Beaumont, TX 77705
Tel: 409-840-5025

Frank Owens, Proprietor
Dairy Queen
3755 College St.
Beaumont, TX 77701
Tel: 409-838-4723

Nolan Hines, Jr.
Taste of Orleans
672 Orleans St.
Beaumont, TX 77701
Tel: 409-833-9460
Cell: 409-553-4632
Fax: 409-833-9470
Website: www.tasteoforleansonline.com

Roofing

John & Lawrence
Norman & Norman Roofing
Beaumont, TX

John Tel: 409-454-8586
Lawrence Tel: 409-838-4266

Sanitary Supply

Armstead Price, Owner
MVP Janitorial Inc.
5430 Concord Road, Suite A
P.O. Box 22961-2961
Beaumont, Tx 77720
Tel: 409-347-4100
Cell: 409-454-5100

*S and S – Enterprises
PO Box 1983
Beaumont, TX 77704
Tel: 409-842-0594
Fax: 409-842-0594
Pager: 409-726-3624

The Invisible Armor
Tammy Powell
P.O. Box 22492
Beaumont, TX 77720
Tel: 409-840-9801
Fax: 409-840-9815
Email: www.iarmor.net

Trophies

*Harold Williams & Sherrie Charles
AAA Trophy Shop & Etc.
4570 Highland Ave
Beaumont, TX 77705
Tel: 409-651-6050
Fax: 409-842-6473
Email: aaatrophyshop@yahoo.com

Trucking/Heavy Hauling

Alex J. Jeanmard
J&J Trucking
Tel: 409-833-3026

Erwin Charles
Charles Trucking
Tel: 409-835-5805

Delisa Bean
Dawn Express
2005 Broadway, Suite 113
Beaumont, TX 77702
Tel: 409-212-8222

Frank Patillo
Frank Patillo Trucking
Tel: 409-833-0804

Gerald Castille
G&S Trucking & Mowing
Tel: 409-832-8347

Chris Gobert
Gobert Trucking Company
Tel: 409-838-5079

Jerry P. Bernard
Bernard's Trucking
Tel: 409-842-1259

Joseph Charles
J&P Trucking
Tel: 409-835-3119

Mrs. Shelia M. Mire
W&S Mire Trucking

Roland Eaglin
Roland Eaglin Trucking
Tel: 409-835-0100

Wrecker Services
Mr. Chuck Guillory
Chuck's Wrecker Service
2945 Blanchette Service
Beaumont, TX 77701
Tel: 409-832-8228
Fax: 409-833-8348

Tommy Guillory
Guillory's Wrecker Services
4020 Fannett Rd
Beaumont, TX 77705
Tel: 409-842-5106
Bernard Simon

Mirror Shine & Shoe Repair
657 Park
Beaumont, TX 77701
Tel: 409-835-5722

Exhibit "E"

Jefferson County Abatement Policy

It is understood and agreed that all abatement agreements granted herein shall conform to this abatement policy and to the Texas Tax Code.

EXHIBIT "F" - AFFILIATES OF OWNER

Jefferson County District Clerk
Jamie Smith

2018 DISTRICT CLERK RECORDS ARCHIVE PLAN

I. BACKGROUND AND PURPOSE

The District Clerk's office maintains millions of records dating back from the mid 1800's to present. These records are on various forms of medium ranging from hard bound binders, roll film and micro fiche, as well as original paper documents. In the year 2000 our office began the process of using scanned imaging. In 2014 the District Clerks office was mandated to begin solely accepting civil and family cases through efile. Criminal courts are approaching an efile mandate in 2018. In 2017 an efile pilot program began with Drug Court. We are anticipating having all criminal courts efiling by June 5, 2017. These records are all accessible to any Jefferson County court clerk or administrator that has access to the Workflow system. Documents are accessible to law firms through our website online documents and the public through our public terminals in the District Clerk's office.

We have part time employees whose sole purpose is to scan and destroy old filings for archive purposes. In addition we have several fulltime clerks who scan and destroy cases as time allows from other daily duties. These employees scanned and destroyed a combined total of 7,977 cases in 2016 - 2017. In January 2016 we began a project with Data Bank and outsourced a back file scanning project with our civil files. We were able to have an estimate of 11,480 cases imaged and 5,910 of these cases have been indexed into our Workflow system. Our paper file inventory consists of 190,064 cases dating from 1992 to present. There remains over 25 years of back file scanning that needs to be done for archival purposes.

II. AUTHORITY

The responsibilities of the District Clerk and their authority to govern the records of the Jefferson County District Courts are established by the Texas Government Code. The Texas State Library and Archives Commission, Schedule DC – Records Retention, establishes the retention period for all documents maintained by the District Clerk. The Jefferson County District Clerk is the Records Management Officer for all records of the District Courts of Jefferson County, Texas.

III. 2018 DESIGNATION OF COURT DOCUMENTS

Pursuant to the Texas Government Code, Chapter 51, Section 305, the District Clerk hereby designates that in lieu of filing records control schedules, we have adopted records control schedules that comply with minimum requirements established on records retention schedules issued by the Texas State Library and Archives Commission for use in our records management program. In doing so, I also certify that the administrative rules for electronic records, adopted by the commission under Local Government Code 205.003(a) will be followed for records subject to the rules. For the purpose of this section the following documents constitute the Jefferson County District Courts Records Archive:

A. Civil and Tax Courts

Civil Court Dockets (1844 - 1984)
Civil Court Indexes (1844 - 1984)
Civil Court Minute Books (1844 – 1984)
Civil Court Minutes Film/Paper Source (1984 – Present)
Civil Court Case Filings Paper Source (1988 – Present)
Execution Docket Books (1850 – 2004)
Executions and Orders of Sale Civil and Tax (1850 – 2004)
Tax Court Minute Books (1903 – 1967)
Tax & Court Case Filings Paper Source (1992 – Present)
Civil filings paper source = 48,187

B. Criminal Courts

Criminal Court Indexes (1904 – 1985)
Criminal Court Minute Books (1929 -1987)
Criminal Court Case Filings Paper Source (1993 – Present)
Criminal filings paper source = 58,112

C. Family Courts

Family Court Case Files:
- Adoptions
- Name Change Petitions
- Paternity Suits
- Voluntary Legitimating Petitions and Statements

Family Court Dockets (1844 – 1984)
Family Court Indexes (1844 – 1984)
Family Court Minute Books (1894 – 1988)
Family Court Case Filings Paper Source (1992 – Present)
Family Court filings paper source = 79,464

D. Juvenile Courts

Juvenile Case Files:
- Adoption
- Paternity Suits (Adjudicating parentage)
- Name Change Petitions
- Voluntary Legitimating Petitions and Statement

Juvenile Court Dockets
Juvenile Court Minute Books (1910 – 1964)
Juvenile Court Indexes (1964 – 1985)
Juvenile Court Case Filings Paper Source (1998 – Present)
Juvenile court filings paper source = 4,841

IV. GOAL

The goal is to preserve, reproduce and archive all paper documents, regardless of type, as efficiently as possible. To complete our efforts toward electronic storage of all case files, we envision using computers to access all records with a view to the future of using the computers entirely for court activity. In addition to preserving the documents, the images will be added to our existing imaging system and improve customer service. Additionally, significant space savings will be realized once paper documents are destroyed.

It is the intent to use a portion of the Records Archive SB1685 fund balance for archiving seminars, archiving equipment and continuing a back file scan project with Data Bank.

V. FUNDING

Projected Annual Revenue (SB1685)
Based on FY 2015 - 2016 filing figures

YEAR	Beginning Fund Balance	Estimated Revenues	Estimated Expenditures	Estimated Ending FB
FY 2017	$34,000	$29,000	**$44,730.50** *Data Bank Project carry over $7,000* *Archive Seminars $1,200* *Archive Equipment & Maintenance $10,700* *Kofile Book Preservation $25,830.50*	$18,269.50
FY 2018	$24,935	$30,010	**$24,520** *Data Bank Project $20,000* *Equipment & Maintenance $3320* *Archive Seminars $1200*	$30,425

SECTION 9
EMERGENCY CLOSING

I. Jefferson County will make every effort to provide all services to citizens, even in cases of extreme adverse weather or other emergencies. Therefore, the County will almost always remain open to conduct regular business during normally scheduled hours. Under extraordinary conditions, however, the County may:

A) **Close entirely while asking essential personnel to report/stay on duty.** This status may apply under unusual, extreme conditions. If the County is closed, non-essential employees are not to report. However, certain employees necessary to protect the public, secure/protect property may be asked to report for duty on a case-by-case basis. These employees will be notified in response to each specific emergency.

B) **Delay opening while asking essential personnel to report/stay on duty.** This status may apply when severe weather conditions interfere with employee travel but conditions are expected to improve. Operations will normally be cancelled during the time of the delayed opening with essential personnel expected to report. If conditions do not improve, a decision may be made later to close the County (essential personnel reporting).

C) **Early release while asking essential personnel to report/stay on duty.** This status may apply when severe weather conditions interfere with employee travel. Offices may continue to operate (possibly with reduced staffing). As a result, some staff may be asked to remain on duty by the supervisor. Any shift employees should check with their supervisor to determine whether or not to report. Essential personnel will be expected to remain until relieved or notified by their supervisors to leave.

D) **Localized/Temporary Closing**. Extreme conditions (i.e. prolonged electrical outages, water leaks, fumes etc.) occasionally may make working conditions in a particular building or location intolerable. Supervisors or employees in the affected unit(s) should discuss the problem with their supervisors who may consult with the Human Resources/Risk Management Department. If the problem cannot be resolved, closing may be considered as a last resort. Such closures must be authorized by the Elected Official or Department Head (after consulting with their Court Liaison).

Note: The extraordinary pay for essential employees described in section III (C) of this policy will not apply unless there is an official Declaration of Disaster as defined by Government Code Chapter 418.

II. Jefferson County Commissioners' Court has adopted the following emergency closing procedures:

A) Whenever a Jefferson County Commissioner, the County Judge or Emergency Management Coordinator has reason to believe that an emergency situation exists (or is

imminent) necessitating closure of County facilities, if time permits, an emergency meeting of the Jefferson County Commissioners' Court shall be held to consider official action.

B) If, in the opinion of the County Judge, or, in his absence, of the senior available County Commissioner, insufficient time exists to hold an emergency meeting of the Commissioners' Court, then that individual shall, based on concern over safety of County employees and other citizens as well as interest in the availability of governmental services, determine whether to close buildings in whole or in part.

C) Once a decision has been made to close any governmental building, the County Judge or County Commissioner making the decision (or designated staff) shall make every attempt to notify local media to inform citizens of such closure. Affected County Department Heads/Elected Officials will also be notified of the closure.

D) Each Elected Official/Department Head should determine and implement whatever actions would be necessary to protect employees, customers, visitors, equipment, vital records and other assets, particularly during the first three days of the event and during restoration of operations.

Each Elected Official/Department Head should maintain current contact information on their employees. All employees are strongly encouraged to register with Blackboard Connect.

The County's operating status will be communicated to as many local television and radio stations as possible. Jefferson County will provide general information on our operating status through the Blackboard Connect service and through our website: co.jefferson.tx.us. We may also issue an informational telephone number and/or post updates at the Texas Association of Counties (TAC) website: www.county.org.

III. Pay Practices due to Emergency Closure under Declaration of Disaster

Jefferson County will provide pay/paid leave for essential and non-essential employees in the event of certain emergencies including, but not limited to: hurricanes, tornados, floods, fires and other Acts of God; nuclear, chemical and biological emergencies, terrorist attack or any other emergency declared by a federal, state or local authority. Nothing in this policy shall be construed as changing the "at will" or the regular exempt/nonexempt status of any person employed by Jefferson County.

A) In the event that an emergency closing is ordered, non-essential regular full-time employees will be paid their regular wages as the day(s) will be recorded as an official closed day(s). This time off is not considered time worked and will not be used to determine eligibility for overtime. Part-time employees will not be compensated for time lost due to a closing.

B) Any employee who is off or scheduled to be off on vacation, compensatory time, personal leave, sick leave, FMLA or disciplinary leave without pay during a period of emergency closure shall have their leave recorded as such. Any essential employee who is off on paid leave may be required to return to work immediately. (In situations involving an "emergency evacuation order," as defined by Chapter 22, Texas Labor Code, any essential employee who fails to report to work as scheduled/requested during inclement weather or disaster may be subject to disciplinary action, up to and including termination, if such employee is necessary to provide for the safety and wellbeing of the general public or is otherwise necessary for the restoration of vital services.)

C) Whenever there is a Declaration of Disaster under Chapter 418 of the Government Code which results in the complete closure of normal county operations, all approved essential employees (exempt or non-exempt) required to remain at work/report to work will be compensated at their regular rate of pay. In addition, they will receive premium/extraordinary pay at 1 / 2 times their hourly salary for the duration of the emergency closure for all documented time during which work is performed. All hours worked in excess of 40 hours per designated work week will be paid in accordance with FLSA guidelines. The maximum number of work hours which may be recorded for any work day is limited to 24 hours per day during the first 72 hours of the emergency closure and 18 hours per day thereafter. All hours must be documented in a format approved by the County Auditor.

1) All essential employees must be designated and made aware of their assignments prior to an emergency closing. A list of essential employees and job duties during the emergency should be provided to the Emergency Management Coordinator and County Auditor and must be approved by the County Judge. The County Judge may also designate additional employees as essential during an emergency closing as necessary. Essential employees are those who are required to stay at their assigned areas performing necessary tasks during the emergency, or those who may be asked to return to work after an immediate threat is over. The list for each department should be updated at least annually. Such personnel may include: Corrections Officers, Deputy Sheriffs, Roads & Bridges crews, Emergency Management personnel, Residential Supervisors, Detention Officers and/or other personnel designated by the County Judge, County Commissioners, Sheriff or other Elected Officials/Department Heads. All other employees should report to their designated work areas as soon as possible following the order/announcement for resumption of normal operations, via instructions from their Elected Officials/Department Heads.

<u>Note</u>: Any employee who has not been designated and approved as essential prior to the emergency closing/declaration will not be eligible to receive the extraordinary pay described in section (C) above.

D) In the instance of localized or temporary closing, the affected employees will be compensated in accordance with section III (A), and all unaffected employees' compensation will be the same as during regular working conditions.

E) Once the official emergency closure is over, employees must report back to work on the date normal County operations resume.

If conditions are such that County offices are safe and normal operations are proceeding, but travel may be extremely difficult, the County may announce to non-essential staff to use their own discretion to decide whether or not to report to work. Any days/hours not worked after normal operations have resumed will be charged to vacation, personal leave, or compensatory time, or time without pay. An employee choosing to take the day off must notify his/her supervisor immediately for approval of paid leave.

Out of State Travel

For: Criminal Investigation Division (2 People)
Cyber-Crimes Unit

Where: Training-National Computer Forensic Institute
Hoover, Alabama

1. This training is not budgeted. The training and travel expenses (air fare, hotel, per diem for food) are all included at no cost to the county.
2. This training is necessary to provide our personnel with the tools needed to fight the constantly evolving crime trends.
3. The benefit is worth the cost because the training is free and will provide updated forensic equipment and software at no cost to the county.
4. This type of training is not offered in Texas.

JEFFERSON COUNTY SHERIFF'S OFFICE

SHERIFF ZENA STEPHENS

To: To: Major J. Shauberger

From: Captain J. Chadney

Date: August 15,2017

Subject: Training-National Computer Forensic Institute

Sir;

Recently we have implemented a Cyber-Crimes Unit as part of the Criminal Investigation Division. This unit has the responsibility of utilizing equipment that the department has in its inventory, to thwart the growing computer crimes, digital evidence recovery, network intrusion, cellular phone forensic exploitation and mapping.

Because of change of personnel and the constantly evolving crime trends it is necessary to provide training of presently assigned personnel, and update our equipment when necessary. The training and equipment is expensive, but necessary to continue to provide these services to the citizens of our county.

We have been able to find excellent training opportunities through the US. Secret Service (Houston Office) through the National Computer Forensic Institute (NCFI) where members of the department can receive training and updated equipment at no cost to The Sheriff's Office or Jefferson County. Some of this training also provides updated forensic equipment and software free after attending the courses.

The training is available with several courses at the National Computer Forensics Institution in Hoover, Alabama. We have been able to secure nominations for several training slots through relationships with the US. Secret Service (Houston Office). These classes fill up quickly and it is imperative that we have approval even though the classes are in December 2017 and January 2018.

Travel expenses (Air travel), hotel, and training costs, per diem for food are included in the course training. There is no training of this level in the State of Texas. The upcoming training opportunities of which we have been nominated are:

Basic Mobile Device Investigations

December 10-15, 2017

2020 Valleydale Rd, suite 209, Hoover, Alabama 35244

(One Investigator)

Social Networking Investigations

January 21-26 2018

2020 Valleydale Rd, suite 209, Hoover, Alabama 35244

(One Investigator)

AGENDA ITEM **August 28, 2017**

Consider, possibly approve and authorize the Jefferson County Judge to execute an Inter-local Agreement between Jefferson County and the cities of Beaumont and Port Arthur on asset sharing of the 2017 Byrne Justice Assistance Grant (JAG) Program Award.

GMS Application Number 2017-H2738-TX-DJ

Resolution No.

The State of Texas	)(	
County of Jefferson	)(	
City of Beaumont, Texas	)(	**Know All by These Present**
City of Port Arthur, Texas	)(	

Inter-Local Agreement

Between the County of Jefferson, Texas; City of Beaumont, Texas; and City of Port Arthur, Texas 2017 Edward Byrne Justice Assistance Grant (JAG) Program Award

This Agreement is made and entered into this _____ day of _____ 2017, by and between The County of Jefferson, Texas acting by and through its governing body, the Commissioners Court; the City of Beaumont, Texas acting by and through its governing body, the City Council; and the City of Port Arthur, Texas acting by and through its governing body, the City Council, witnesseth:

WHEREAS, each governing body, in performing governmental functions or in paying for the performance of governmental functions hereunder, shall make that performance or those payments from current revenues legally available to that party: and

WHEREAS, each governing body finds that the performance of this Agreement is in the best interests of all parties, that the undertaking will benefit the public, and that the division of costs fairly compensates the performing party for the services or functions under this agreement: and

WHEREAS, the total funding allocation is $112,725; and the City of Beaumont, Texas, and the City of Port Arthur, Texas, agree to provide Jefferson County, Texas $16,909 from the JAG award and the City of Beaumont, Texas, and the City of Port Arthur, Texas agree to allocate the remaining funds as follows:

$69,425 to the City of Beaumont, Texas, and $26,391 to the City of Port Arthur, Texas.

WHEREAS, Jefferson County, Texas, the City of Beaumont, Texas, and the City of Port Arthur, Texas, believe it to be in their best interests to reallocate the JAG funds.

NOW THEREFORE, Jefferson County, Texas, the City of Beaumont, Texas, and the City of Port Arthur, Texas agree as follows:

Section 1.
The City of Beaumont, Texas and the City of Port Arthur, Texas agree to provide Jefferson County, Texas $16,909 from the JAG award; and the City of Beaumont, Texas and the City of Port Arthur, Texas agree to allocate the remaining funds as follows:

$69,425 to the City of Beaumont, Texas; and $26,391 to the City of Port Arthur, Texas.

Section 2.
Jefferson County, Texas agrees to use the funding for the Technology Enhancement Program until 2020.

The City of Beaumont, Texas agrees to use the funding for the Technology Enhancement Program until 2020.

The City of Port Arthur, Texas agrees to use the funding for the Technology Enhancement Program until 2020.

Section 3.
Each party to this agreement will be responsible for its own actions in providing services under this Agreement and shall not be liable for any civil liability that may arise from the furnishing of the services by the other party.

Section 4.
The parties to this Agreement do not intend for any third party to obtain a right by virtue of this Agreement.

Section 5.
By entering into this Agreement, the parties do not intend to create any obligations express or implied other than those set out herein; further, this Agreement shall not create any rights in any party not a signatory hereto.

Section 6.
The City of Beaumont agrees to act as the fiscal agent in applying for, dispersing, monitoring, and reporting for this JAG funding.

City of Beaumont, Texas

_____
CITY MANAGER

City of Port Arthur, Texas

_____
CITY MANAGER

Jefferson County, Texas

_____
COUNTY JUDGE

*By law, the District Attorney's Office may only advise or approve contracts or legal documents on behalf of its clients. It may not advise or approve a contract or legal document on behalf of other parties. Our view of this document was conducted solely from the legal perspective of our client. Our approval of this document was offered solely for the benefit of our client. Other parties should not rely on this approval and should seek review and approval by their own respective attorney(s).

INTERLOCAL CONTRACT

SOUTHEAST TEXAS AUTO THEFT TASK FORCE

STATE OF TEXAS §
COUNTY OF JEFFERSON §

This Interlocal Contract, ("**Contract**") is entered into between the City of Beaumont, a municipal corporation situated in Jefferson County, Texas, ("**Beaumont**"), the City of Port Arthur, a municipal corporation situated in Jefferson County, Texas ("**Port Arthur**") , Jefferson County, a political subdivision of the State of Texas ("**Jefferson County**") , Hardin County, a political subdivision of the State of Texas ("**Hardin County**"), Jasper County, a political subdivision of the State of Texas ("**Jasper County**"), and Orange County, a political subdivision of the State of Texas ("**Orange County**") pursuant to the Interlocal Cooperation Act, Tex. Gov't Code Ann. Sec. 791.001 - 791.027 (Vernon 1997).

WITNESSETH

Whereas, **Beaumont**, **Port Arthur**, **Hardin County, Jasper County**, **Jefferson County,** and **Orange County**, collectively herein after referred to as "**Parties**", seek to contract or agree with each other to perform certain governmental functions and services in a joint cooperative agency which is known as the Southeast Texas Auto Theft Task Force ("**Task Force**"); and

Whereas, the **Parties** are each independently authorized, pursuant to Tex. Gov't. Code Ann. Sec. 791.001 to enter into a joint contract to provide a governmental function or service which each party to the Contract is authorized to perform individually; and

Whereas, the **Parties** wish to file a joint application for grant funding (FY2018) with the Automobile Burglary and Theft Prevention Authority of the State of Texas ("**Authority**") in the amount of $528,714.00; and

Whereas, the **Parties** believe it to be in the best interest of the **Parties** to continue the operation of the **Task Force** based upon positive results of prior operations of the **Task Force** which include, but are not limited to, demonstrated decreases in the number of reported auto thefts; and

Whereas, there are approximately 405,000 registered motor vehicles in Jefferson, Hardin, Jasper, and Orange Counties combined; and

Whereas, since the inception of the **Task Force** in 1993 officers in the **Task Force** have made approximately 2,410 arrests, filed approximately 4,623 auto related criminal cases with prosecuting authorities, recovered more than 5,180 vehicles valued at an estimated $49,669,902 along with other property estimated at $5,550,501; and

Whereas, the **Parties** have agreed to provide **$**351,632 in funding (personnel services, equipment, vehicle supplies, salaries, benefits, and insurance) to be used to match the funding sought from the **Authority**; and

Whereas, the **Parties** believe that it is in their mutual interest to enter into this **Contract** to carry-out operations of the **Task Force**; and

Whereas, the **Parties** agree to abide by all pertinent federal, state and local laws and regulations;

NOW, THEREFORE, IT IS HEREBY AGREED AS FOLLOWS:

ARTICLE I.

1.01 The purpose of this **Contract** is to continue the operation of the **Task Force** pursuant to a joint application filed with the **Authority** for FY 2018 grant funding of the **Task Force**.

1.02 The **Parties** to this **Contract** hereby mutually agree to cooperate to whatever extent is necessary to carry out the work plan set forth in the grant application.

ARTICLE II.

2.01 The term of this **Contract** shall be for a period of one (1) year from and after the date of August 31, 2017 subject to other termination rights of the **Parties** as established in this document.

ARTICLE III.

3.01 As a condition and part of this **Contract,** the **Parties** agree to contribute a total of $351,632 in match funding for operation of the **Task Force** in the following amounts:

Match by the City of Beaumont	$267,433
Match by the City of Port Arthur	$29,510
Match by Jefferson County	$32,506.
Match by Hardin County	$22,183
Match by Jasper County	-0-
Match by Orange County	-0-

ARTICLE IV.

4.01 The expenditure of funds, including the anticipated receipt of $528,714.00 from the **Authority** is set out in Exhibit "A" which is attached hereto and incorporated herein.

ARTICLE V.

5.01 **Beaumont** is designated as the primary agency ("**GRANTEE**") for purposes of this **Contract** and for purposes of receipt and disbursement of all funds received from the **Authority**. **Beaumont** shall designate a lieutenant of the Beaumont Police Department to serve as the director for the **Task Force** who shall be authorized to establish rules, regulations, directives, etc. for operation of the **Task Force** and the administration of funding for the **Task Force**.

ARTICLE VI.

6.01 Upon termination of this **Contract**, right, title and ownership of non-expendable property acquired pursuant to this **Contract** will revert to the individual party for which it was acquired, subject to the statutes of the State of Texas and approval of the **Authority.**

ARTICLE VII.

7.01 **Beaumont**, **Port Arthur**, **Hardin County, Jasper County**, **Jefferson County**, and **Orange County** as political subdivisions, are governed by the Texas Tort Claims Act, Chapter 101.001 et seq., Civil Practice and Remedies Code. **Beaumont**, **Port Arthur**, **Hardin County, Jasper County**, **Jefferson County** and **Orange County** warrant and represent to each other that they are self-insured or commercially insured for all claims falling within the Texas Tort Claims Act.

7.02 Each party to this **Contract** agrees that it shall have no liability whatsoever for acts or omissions of an individual employed by another party regardless of where the individual's actions occurred. Each party is solely responsible for the action and/or omissions of its employees and officers.

ARTICLE VIII.

8.01 The **Parties** certify that the **Task Force** is a program which meets all the requirements of the **Authority** program, that the information set forth in this **Contract** is correct, and that the **Parties** will comply with the appropriate provisions of the **Authority**.

8.02 The **Parties** assure and certify that they will comply with the regulations, policies, guidelines, and requirements set forth in the "assurances" section of the 2015 Grant Application and the Administrative Guide issued by the **Authority** pursuant to the acceptance and use of any federal funds. If any of the provisions of the "assurances" are applicable pursuant to statutes of the State of Texas, the **Parties** will comply with those pertinent parts.

8.03 The **Parties** assure and certify to the **Authority** that they are in compliance with Subtitle A, Title II of the Americans with Disabilities Act (A.D.A.), 42 U.S.C. 12131-12134, and Department of Justice implementing regulation 28 C.F.R., Part 35.

8.04 Attached as Exhibit "A" is a digest representing the Authority's approved budget summary for grant 608-18-1230100. The Parties agree that they shall be responsible for determining, prior to expenditure of funds, that:

1. Salaries are in accordance with local policy of participating agencies.
2. Personnel are classified in accordance with the needed qualification for the position.
3. Fringe benefits are in accordance with local policy of the participating agencies.
4. Travel policy is in accordance with the travel policy of the City of Beaumont.

ARTICLE IX.

9.01 This **Contract** may only be amended by mutual agreement of the **Parties** hereto in writing and any amendments shall be attached to and incorporated into this **Contract**.

ARTICLE X.

10.1 In case any one or more of the provisions contained in this **Contract** shall be held to be invalid, illegal or unenforceable in any aspect, such invalidity, illegality or unenforceability shall not affect any other provision of the **Contract,** and this **Contract** shall be construed as if such invalid, illegal or unenforceable provision had never been contained herein.

ARTICLE XI.

11.01 This **Contract** supersedes any and all other agreements, either oral or in writing, between the **Parties** hereto with respect to the subject matter hereof, and no other agreement, statement or promise relating to the subject matter of this agreement which is not contained herein shall be valid or binding.

EXECUTED by the City of Beaumont this _____ day of _____, 2017.

CITY OF BEAUMONT, TEXAS

By: _____
Kyle Hayes, City Manager

EXECUTED by Jefferson County this _____ day of _____, 2017.

JEFFERSON COUNTY, TEXAS

By: _____
Jeff Branick, County Judge

EXECUTED by the City of Port Arthur this _____ day of _____, 2017.

CITY OF PORT ARTHUR

By: _____
Brian McDougal, City Manager

EXECUTED by Orange County this _____ day of _____, 2017.

ORANGE COUNTY, TEXAS

By: _____
Stephen Brint Carlton, County Judge

EXECUTED by Hardin County this _____ day of_____, 2017.

HARDIN COUNTY, TEXAS

By:_____
Wayne McDaniel, Jr, County Judge

EXECUTED by Jasper County this _____ day of _____, 2017.

JASPER COUNTY, TEXAS

By:_____

Mark Allen, County Judge

Watch Your Car
TEXAS AUTO BURGLARY & THEFT PREVENTION AUTHORITY

FY18 Automobile Burglary and Theft and Prevention Authority
Statement of Grant Award and Grantee Acceptance Notice

Grant Number:	**608-18-1230100**
Grantee:	**City of Beaumont**
Program Title:	**Southeast Texas Auto Theft Task Force**
Grant Award Amount:	**$ 528,714**
Total Cash Match Amount:	**$ 351,632**
Reimbursement Percent*:	**60.06%**
In-Kind Match Amount:	**$ 12,822**
Grant Term:	**September 1, 2017 to August 31, 2018**

That whereas, **City of Beaumont** (hereinafter referred to as Grantee), has heretofore submitted a grant application in response to the Request for Application issued on March 24, 2017 to the Automobile Burglary and Theft Prevention Authority, State of Texas, entitled **Southeast Texas Auto Theft Task Force**, and further identified by grant number **608-18-1230100**; and

Whereas, the Automobile Burglary and Theft Prevention Authority has approved the grant application as evidenced by this FY18 Statement of Grant Award and certain special requirements from the Automobile Burglary and Theft Prevention Authority dated **August 10, 2017**; and

Whereas, the Grantee desires to accept the FY18 grant award and use all funds for purposes and in compliance with the following requirements that are adopted in their entirety by reference:

- Texas Revised Civil Statutes Article 4413(37);
- Texas Administrative Code: Title 43; Part 3; Chapter 57;
- Uniform Grant Management Standards (UGMS) as promulgated by the Texas Comptroller of Public Accounts;
- The Request for Applications issued on March 24, 2017;
- The current Automobile Burglary and Theft Prevention Authority Grant Administrative Manual and forms and subsequently adopted grantee instruction manuals and forms;
- The Final Adopted Application attached to this Statement of Grant Award;
- The certification of compliance; and
- The Approved Grant Budget Summary:

Approved Grant Budget Summary

	ABTPA	Cash Match	TOTAL	In-Kind
Personnel	$234,132	$24,000	$258,132	$245,535
Fringe	$0	$193,957	$193,957	$0
Overtime	$0	$4,500	$4,500	$0
Professional and Contract Services	$198,575	$84,199	$282,774	$0
Travel	$6,644	$0	$6,644	$0
Equipment	$0	$0	$0	$0
Supplies and Direct Operating Expenses	$89,363	$44,976	$134,339	$12,822
Total	$528,714	$351,632	$880,346	$258,357

*Reimbursement Percent: 60.06% - $528,714 ABTPA Amt. / $ 880,346 (ABTPA Amt. plus $351,632 Cash Match)

In the award above, $105,743 is obligated from AY17 appropriation and $422,971 from AY18 appropriation.

Now, therefore, the Grantee accepts the FY18 Statement of Grant Award under the conditions above including the special requirements in the grant application and the Statement of Grant Award as evidenced by this agreement, executed by the official authorized to sign the original grant application, or the official's designated successor, as presiding officer of and on behalf of the governing body of this grantee; and

The Texas Automobile Burglary and Theft Prevention Authority (ABTPA) has awarded the above-referenced grant subject to the availability of state funds. The approved budget is reflected in the above Approved Grant Budget Summary. This grant is subject to and conditioned upon the acceptance of the ABTPA Grant Administrative Guide promulgated for this specific program fund (referenced above) by the Automobile Burglary and Theft Prevention Authority. Applicable special conditions are listed below.

Special Conditions and Requirements:

Border Security Report Requirement – Grantees that receive ABTPA funds and which are located along the United States of America border with the United States of Mexico and those that are adjacent to the Gulf Intracoastal Waterway are required to provide an additional report as required by the General Appropriations Act, page IX-40 Section 7:11 (b) 3; 85th Texas Legislature, Regular Session. The report form will be developed and provided to the applicable grantee prior to September 1, 2017. The Governor or Legislative Budget Board may request additional information regarding the report data during the term of the grant.

APPROVED AND ACCEPTED BY:

Approved and Accepted by:

L L

Authorized Official

Kyle Hayes, City Manager

Printed Name and Title

8-16-17

Date Signed

Watch Your Car
TEXAS AUTO BURGLARY & THEFT PREVENTION AUTHORITY

FY18 Automobile Burglary and Theft and Prevention Authority
Statement of Grant Award and Grantee Acceptance Notice

Grant Number:	**608-18-1230100**
Grantee:	**City of Beaumont**
Program Title:	**Southeast Texas Auto Theft Task Force**
Grant Award Amount:	**$ 528,714**
Total Cash Match Amount:	**$ 351,632**
Reimbursement Percent*:	**60.06%**
In-Kind Match Amount:	**$ 12,822**
Grant Term:	**September 1, 2017 to August 31, 2018**

That whereas, **City of Beaumont** (hereinafter referred to as Grantee), has heretofore submitted a grant application in response to the Request for Application issued on March 24, 2017 to the Automobile Burglary and Theft Prevention Authority, State of Texas, entitled **Southeast Texas Auto Theft Task Force**, and further identified by grant number **608-18-1230100**; and

Whereas, the Automobile Burglary and Theft Prevention Authority has approved the grant application as evidenced by this FY18 Statement of Grant Award and certain special requirements from the Automobile Burglary and Theft Prevention Authority dated **August 10, 2017**; and

Whereas, the Grantee desires to accept the FY18 grant award and use all funds for purposes and in compliance with the following requirements that are adopted in their entirety by reference:

- Texas Revised Civil Statutes Article 4413(37);
- Texas Administrative Code: Title 43; Part 3; Chapter 57;
- Uniform Grant Management Standards (UGMS) as promulgated by the Texas Comptroller of Public Accounts;
- The Request for Applications issued on March 24, 2017;
- The current Automobile Burglary and Theft Prevention Authority Grant Administrative Manual and forms and subsequently adopted grantee instruction manuals and forms;
- The Final Adopted Application attached to this Statement of Grant Award;
- The certification of compliance; and
- The Approved Grant Budget Summary:

Approved Grant Budget Summary

	ABTPA	Cash Match	TOTAL	In-Kind
Personnel	$234,132	$24,000	$258,132	$245,535
Fringe	$0	$193,957	$193,957	$0
Overtime	$0	$4,500	$4,500	$0
Professional and Contract Services	$198,575	$84,199	$282,774	$0
Travel	$6,644	$0	$6,644	$0
Equipment	$0	$0	$0	$0
Supplies and Direct Operating Expenses	$89,363	$44,976	$134,339	$12,822
Total	$528,714	$351,632	$880,346	$258,357

*Reimbursement Percent: 60.06% - $528,714 ABTPA Amt. / $ 880,346 (ABTPA Amt. plus $351,632 Cash Match)

In the award above, $105,743 is obligated from AY17 appropriation and $422,971 from AY18 appropriation.

Now, therefore, the Grantee accepts the FY18 Statement of Grant Award under the conditions above including the special requirements in the grant application and the Statement of Grant Award as evidenced by this agreement, executed by the official authorized to sign the original grant application, or the official's designated successor, as presiding officer of and on behalf of the governing body of this grantee; and

The Texas Automobile Burglary and Theft Prevention Authority (ABTPA) has awarded the above-referenced grant subject to the availability of state funds. The approved budget is reflected in the above Approved Grant Budget Summary. This grant is subject to and conditioned upon the acceptance of the ABTPA Grant Administrative Guide promulgated for this specific program fund (referenced above) by the Automobile Burglary and Theft Prevention Authority. Applicable special conditions are listed below.

Special Conditions and Requirements:
Border Security Report Requirement – Grantees that receive ABTPA funds and which are located along the United States of America border with the United States of Mexico and those that are adjacent to the Gulf Intracoastal Waterway are required to provide an additional report as required by the General Appropriations Act, page IX-40 Section 7:11 (b) 3; 85th Texas Legislature, Regular Session. The report form will be developed and provided to the applicable grantee prior to September 1, 2017. The Governor or Legislative Budget Board may request additional information regarding the report data during the term of the grant.

APPROVED AND ACCEPTED BY:

Approved and Accepted by:

L I L

Authorized Official

Kyle Hayes, City Manager

Printed Name and Title

8-16-17

Date Signed

Special, August 28, 2017

There being no further business to come before the Court at this time, same is now here adjourned on this date, August 28, 2017