JEFFERSON COUNTY, TEXAS
PURCHASING DEPARTMENT

1149 Pearl Street – First Floor
Beaumont, Texas 77701
409-835-8593 phone

ADDENDUM TO IFB

IFB Number: 21-004/JW

IFB Title: Phase VI: First Time Sanitary Sewer Improvements Project for Jefferson County (Community Development Block Grant) (TxCDBG No. 7218240)

IFB Due: **11:00 am CT, Wednesday, March 24, 2021**

Addendum No.: 3

Issued (Date): March 22, 2021

TO BIDDER: This Addendum is an integral part of the IFB package under consideration by you as a Bidder in connection with the subject matter herein identified. Jefferson County deems all sealed proposals to have been proffered in recognition and consideration of the entire IFB package – **including all addenda.** For purposes of clarification, **receipt of this present Addendum by a Bidder should be evidenced by returning it (signed) as part of the Bidder's sealed proposal.** If the Proposal has already been received by the Jefferson County Purchasing Department, Bidder should return this addendum in a separate sealed envelope, clearly marked with the IFB Title, IFB Number, and Opening Date and Time, as stated above.

Reason for Issuance of this addendum:

- **Revisions to Bid Specifications: Additional Construction Documents (ATTACHED)**
- **Change of Bid Opening Location:**

The Bid Opening Location has been changed from the Jefferson County Engineering Conference Room ***to*** the **Commissioners'Courtroom located on the 4 th Floor of the Jefferson County Historic Courthouse (1149 Pearl Street, Beaumont, Texas 77701)**

NOTE: Bids are to be **submitted to the Purchasing Department**, located on the 1st floor of the Jefferson County Historical Courthouse.

The information included herein is hereby incorporated into the documents of this present Bid matter and supersedes any conflicting documents or portion thereof previously issued.

Receipt of this Addendum is hereby acknowledged by the undersigned Bidder:

ATTEST:

_____ Authorized Signature (Bidder)

_____ Witness

_____ Title of Person Signing Above

_____ Witness

_____ Typed Name of Business or Individual

Approved by ____ Date: _____

_____ *Address*

JEFFERSON COUNTY, TEXAS

PHASE VI: FIRST-TIME SANITARY SEWER IMPROVEMENT PROJECT
TDA – TXCDBG PROJECT NO. 7218240

INDEX TO DRAWINGS

TITLE	SHEET NO.
TITLE SHEET	1
CONSTRUCTION NOTES	2
OVERALL PROJECT LOCATION MAPS	3
HOUSE INDEX MAPS	4–8
SANITARY SEWER PLAN SHEETS	9–16
SANITARY SEWER DETAILS	17–18
TRENCH DETAILS	19

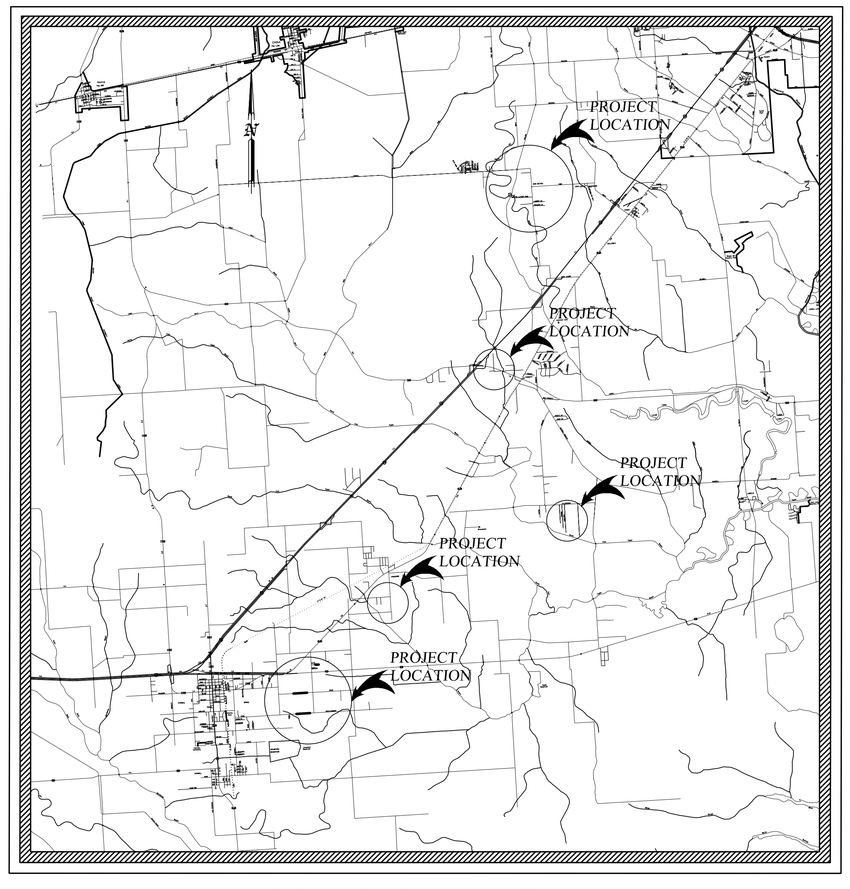

PROJECT LOCATION
NTS

APPROVED
LJA ENGINEERING, INC.

BY: _____ 2/10/21
TOBY J, DAVIS P.E. NO. 81919 DATE

STATE OF TEXAS
TOBY J. DAVIS
81919
REGISTERED PROFESSIONAL ENGINEER

THE SEAL APPEARING ON THIS DOCUMENT WAS AUTHORIZED BY TOBY J. DAVIS, P.E. 81919, ON 2/10, 2021

PREPARED BY:
LJA ENGINEERING, INC.
CONSULTING ENGINEERS
2615 CALDER AVENUE BEAUMONT, TEXAS 77702
Texas Registered Engineering Firm FRN-F-1386

FEBRUARY 2021

GENERAL CONSTRUCTION NOTES

1. In all construction, the Contractor shall be responsible for providing all fittings and appurtenances necessary for a complete installation even if not specifically mentioned.

2. The Contractor shall verify all dimensions and existing conditions of the job site. Any variation from dimensions or details as shown on the structural drawings shall be reported to the Engineer.

3. The Contractor shall confine his operations to the indicated easements and rights of ways. He shall keep all work sites in a neat, orderly, and safe manner during the course of the construction. All excess soils and materials shall be disposed of on a regular basis or whenever, in the opinion of the Engineer, they constitute a hazard or nuisance. Disposal of excess soils shall be in accordance with all local, state, and federal laws at the Contractor's expense. All litter and temporary trash disposal facilities shall be removed, all materials designated to be salvaged to the Owner shall be deposited in an Owner approved site, and all surface restoration, including seeding shall be completed prior to the Contract being considered complete.

4. All work areas, surfaces, and ditches disturbed by the Contractor shall be cleaned and restored to their original condition or better in the time frame established in the specifications.

5. The location of all utilities (water, sewer, telephone, cable, electrical, gas, etc.) is the responsibility of the Contractor. The utilities shown on the plans are for informational purposes only and are not intended to show the exact location of the utilities. The Contractor shall give each utility Owner the required notice prior to beginning construction near each utility. The Contractor shall be responsible for resolving any disputes with the utility Owners regarding damage to the utilities. The owner shall not be responsible for damage to existing utilities.

6. The contractor shall be responsible for the control of ground water. The contractor shall submit to the engineer his plan for keeping the ground water out of trenches and excavations. At no time shall ground water be allowed in the excavation while pouring concrete.

7. The Contractor shall be responsible for the restoration of all property markers disturbed during construction.

8. The Contractor shall take necessary precautions to prevent large amounts of soil, rock, and other excavation materials from being washed into the ditches and drainage ways. The streets shall be kept free of dirt and mud that results from the Contractor's work. The Engineer and Owner shall have the right to require that the Contractor immediately remedy any situation which they consider detrimental to public health, safety, the environment, and any other problematic disturbances that are caused by the Contractor's work.

9. In the TxDOT R.O.W.'s and where indicated on the plans, disturbed soil areas shall be broadcast seeded after surface restoration, in accordance with the specifications.

10. Megalug restraining flanges shall be used at all mechanical joint ductile iron fittings. Transition gaskets shall be used where necessary to connect to existing piping. Payment shall be subsidiary to appropriate bid items.

11. The Contractor shall not remove any trees from the project site without prior approval from the Engineer.

12. The slopes of any ditches or any surfaces that are disturbed shall be returned to their original condition or better. Any ditches that the main crosses and that are open cut shall have their slopes backfilled immediately to its original condition.

13. The Contractor shall coordinate with the District a minimum of 48 hours prior to making connections to any existing water lines or sewer lines.

14. Trench protection in accordance with the specifications shall be used where excavations are deeper than five (5) feet deep or if the trench is less than (5) feet deep and in a dangerous condition. The contractor shall be responsible for all shoring of open pits as required by OSHA and the specifications.

15. The contractor shall keep all work sites in a neat, orderly and safe manner during the course of the construction. All excess materials shall be disposed of on a regular basis or whenever, in the opinion of the engineer, they constitute a hazard or nuisance. Disposal of excess soils shall be the responsibility of the contractor and shall be in accordance with all local, state, and federal laws. All work areas and surfaces disturbed by the contractor shall be restored to their original condition or better.

16. The Contractor shall dispose of all materials and rubbish removed from the project site at an off site disposal area in accordance with all local, state, and federal laws. On site burning will not be allowed.

17. The Contractor shall be responsible for removing any trees, stumps, and brush in the areas of construction and where indicated on the plans as necessary to construct the improvements in this project in accordance with all local, state, and federal laws and the scope of work. On site burning will not be allowed. The Contractor shall dispose of all refuge at an off site facility at his own expense. Payment for clearing and disposal will be incidental to the line work.

18. The Contractor shall be responsible for keeping all state and county roads free of dirt, debris, or any other nuisance conditions caused by his activities. The Contractor shall be responsible for the repair of any damage to county or city roads resulting from his operations.

19. All disturbed areas of the project site shall be broadcast seeded in accordance with the specifications. Any damage to existing facilities or ground surfaces by the Contractor will be replaced to its original condition by the Contractor at no additional cost to the Owner.

20. All water lines to be abandoned shall have the end of the pipes capped or plugged according to the details. Thrust blocking shall be constructed at the ends of all capped or plugged water lines that will still be receiving water pressure from the existing mains. Payment for abandonment of water lines will be incidental to other appropriate bid items.

21. Any elevation changes necessary on the proposed water or sewer lines that require 45° fittings that are not shown on the plans shall be installed at no additional cost to the owner.

22. The Contractor shall notify all land owners who will have their service lines reconnected to the new water mains or sewer mains a minimum of 48 hours prior to making connections.

23. Any work that is called for in the plans that is not included in a specific bid item shall be considered incidental to the appropriate bid items, with no additional cost to the owner.

24. The Contractor shall verify existing lateral water line sizes that are shown to be connected to new main on the plans prior to installing branch tees or taps. The contractor shall notify the Engineer of any different water line sizes found prior to installing the lateral tees or taps.

25. If unstable or wet soil conditions are encountered in the trench bottom, the Contractor shall cease work and stabilize the unstable area according to the method called for in the specifications. The Contractor must obtain the approval of the Engineer prior to placement of such material. There will be no additional payment for trench bottom stabilizing or dewatering, regardless of the method used.

26. All underground fittings shall be ductile iron according to the specification. The Contractor shall construct thrust blocks at all bends and tees as approved by the Engineer. See thrust block details.

27. All proposed water mains & sewer mains shall have a minimum of 36" of cover including ditch crossings and bores.

28. The Contractor shall maintain adequate drainage throughout the limits of the project during all construction phases.

29. All drainage structures shall be cleaned and outfall channels unobstructed on a daily basis.

30. All existing signs and sign posts within the limits of construction are to be removed during construction and replaced upon completion to prevent damage. Any signs or posts damaged by the Contractor shall be replaced at his entire expense. There will be no direct expense for this work, but it shall be considered subsidiary to the various bid items of the contract.

31. Erosion control will be subsidiary to other items.

32. Valve markers shall be placed at all valves that are outside of pavemnt. Payment shall be incidental to appropriate bid items.

33. If an open pit is to be left unbackfilled overnight, all open pipes in the pit shall be plugged. Open pits shall be barricaded and roped off and warning signs shall be placed directing pedestrian traffic around the pit. If an open pit is left overnight in the roadway, lighted signs shall be used in accordance with the "Manual on Uniform Traffic Control Devices" as adopted by TxDOT. No driveway or intersection shall be left blocked overnight by the Contractor's operations. The Contractor shall be responsible for all maintenance of the travelway and appurtenances within the barricades for the duration of the project.

34. The Contractor shall follow the alignments as shown on the plans. Deviations shall only be allowed in order to avoid existing facilities and then only with the approval of the Engineer. All deviations from the plan sheets shall be shown on the "As Built" plans.

35. Driveway widths shown on the plans are approximate.

36. The Contractor shall install a durable metal tracer wire for the location of all sanitary sewer service lines installed in this project. The tracer wire shall conform to the following:

    A. The tracer wire shall be minimum 12 gauge solid coated wire (THHN rubber coating).

    B. Contractor shall install tracer wire on top of sanitary sewer service lines, secure to main every 5' with tape.

    C. Loops of tracer wire shall be brought up to the side of each grinder pump station to provide access for connecting the locator in a manner consistent with the recommendations of the manufacturer.

    D. Payment for furnishing and installing tracer wire and connections shall be incidental to the construction of the sanitary sewer service lines.

    E. Connections made on tracer wire shall be soldered and taped.

38. The Owner shall supply water for the testing and sterilization of the water line and sewer line. If the line fails and a retest or additional sterilization is necessary the Contractor will pay the Owner for water to refill the line the second time.

39. The water lines & sewer lines will cross or closely parallel existing culvert pipe in various locations. In the event that any culverts are removed or damaged, the contractor shall relay or replace the culvert pipe to their existing condition or better. Replacement culvert shall be the same size and type as the existing pipe, laid to the same alignment and grade. Existing culvert pipe to be reinstalled shall be free of any damage and shall be cleaned out prior to replacement. All such work shall be incidental to the line work pay item. No additional payment will be made for boring under culverts or drainage structures not indicated on the plans.

40. All signage and safety markings for construction purposes shall be in accordance with TxDots "Manual on Uniform Traffic Control Devices".

41. All driveways and parking areas with material (rock, concrete, and asphalt) shall be bored. All roads shall be bored. Grass driveways may be open cut. Payment for all boring shall be incidental to appropriate bid items.

42. No bores over 60' in length shall be made without prior engineer approval.

43. Payment for individual fittings and valves shall only be made where specifically called for on the plans and provided for individually in the bid proposal. Fittings along the lines will be considered incidental to the line work. Fittings associated with the connection to a water line or sewer line will be included in the connection bid item, if specifically provided for in the bid proposal. Valves called for at a connection to existing water lines & sewer lines will also be considered part of the connection bid item for Hot Taps and all connections to existing 2" water lines. All 3" and 6" valves called for not associated with a Hot Tap shall be paid for individually."

44. If the excavated disturbance will exceed 1 acre for the overall project, a Storm Water Pollution Prevention Plan shall be required. If a SWPPP is necessary the cost shall be incidental to the appropriate bid items.

45. All concrete shall be 3000 psi concrete.

46. The Contractor shall seal the end of the new water lines & sewer lines at the end of each day during installation to prevent anything from entering pipes.

47. Prior to ordering any materials or beginning any construction, the Contractor shall field verify horizontal and vertical location of all existing utilities which will or could impact the Contractor's work whether or not shown on the plans. If there is any discrepancy between the plans and the actual field conditions, then the Contractor shall notify the Owner and/or Engineer before proceeding with any work and before ordering any materials affected by the discrepancy.

48. The Contractor shall video all roadways and right of ways in which work will be performed prior to work beginning. Videos shall include date notation and audio identification of the roadways and locations. This pre-construction video taping of impacted roadways shall be considered subsidiary work.

49. The Contractor shall notify all land Owners who will have their service lines reconnected to the new water mains, by providing door hangers a minimum of 48 hours prior to making connections. Door hangers shall be approved by the engineer prior to the contractor proceeding.

50. The Contractor shall pump out contents of existing septic tank and dispose of in accordance with all local, state, and federal laws. He shall manifest evidence of such disposal.

TRAFFIC CONTROL

1. The Contractor shall maintain at least one line of traffic open at all times when working within or crossing a public road right-of-way, unless otherwise noted. All work shall be limited to County right-of-way and easements. The Contractor shall notify the City and the Engineer of all street or lane closures and construction schedules. All signage and safety markings for construction purposes shall be in accordance with TxDots "Manual on Uniform Traffic Control Devices.

2. The Contractor shall be responsible for traffic control and detours around intersections and roads that will be shut down to thru traffic in any direction. Detour signs shall give directions and have flashing lights.

3. If the Contractor's operations shall block driveways, the Contractor shall notify those residences and make provisions for residents' access to and from their homes. Driveways shall not be left blocked over night.

4. The Contractor shall submit a detour and traffic control plan if requested by the Engineer for any road closure necessary.

O:\PROJECTS LJA B000 - BXXX\B857-JEFFERSON COUNTY\1003 - GLO CDBG PHASE VI - GRINDER PUMP STATION\CAD\B857-1003-02 CONSTRUCTION NOTES.DWG

Plot Date : 1/21/21
File Name : B857-1003
File Drawer No. : B857-1003/CAD

STATE OF TEXAS
TOBY J. DAVIS
81919
REGISTERED PROFESSIONAL ENGINEER

THE SEAL APPEARING ON THIS DOCUMENT WAS AUTHORIZED BY TOBY J. DAVIS, P.E. 81919,
ON 2/10, 2021

No.	Revisions	By	Checked	Date

LJA Engineering, Inc.
2615 Calder Avenue, Suite 500
Beaumont, Texas 77702
Phone 409.833.3363
Fax 409.833.0317
FRN - F-1386

JEFFERSON COUNTY, TEXAS PHASE IV
FIRST TIME SANITARY SEWER PROJECT
CDBG PROJECT NO. 7218240

CONSTRUCTION NOTES

Action	Name	Date
Design	TJD	1/21
Drawn	RH	1/21
Checked	JAD	1/21
Approved	TJD	1/21
Scale	AS SHOWN	
Sheet	02 of 19	

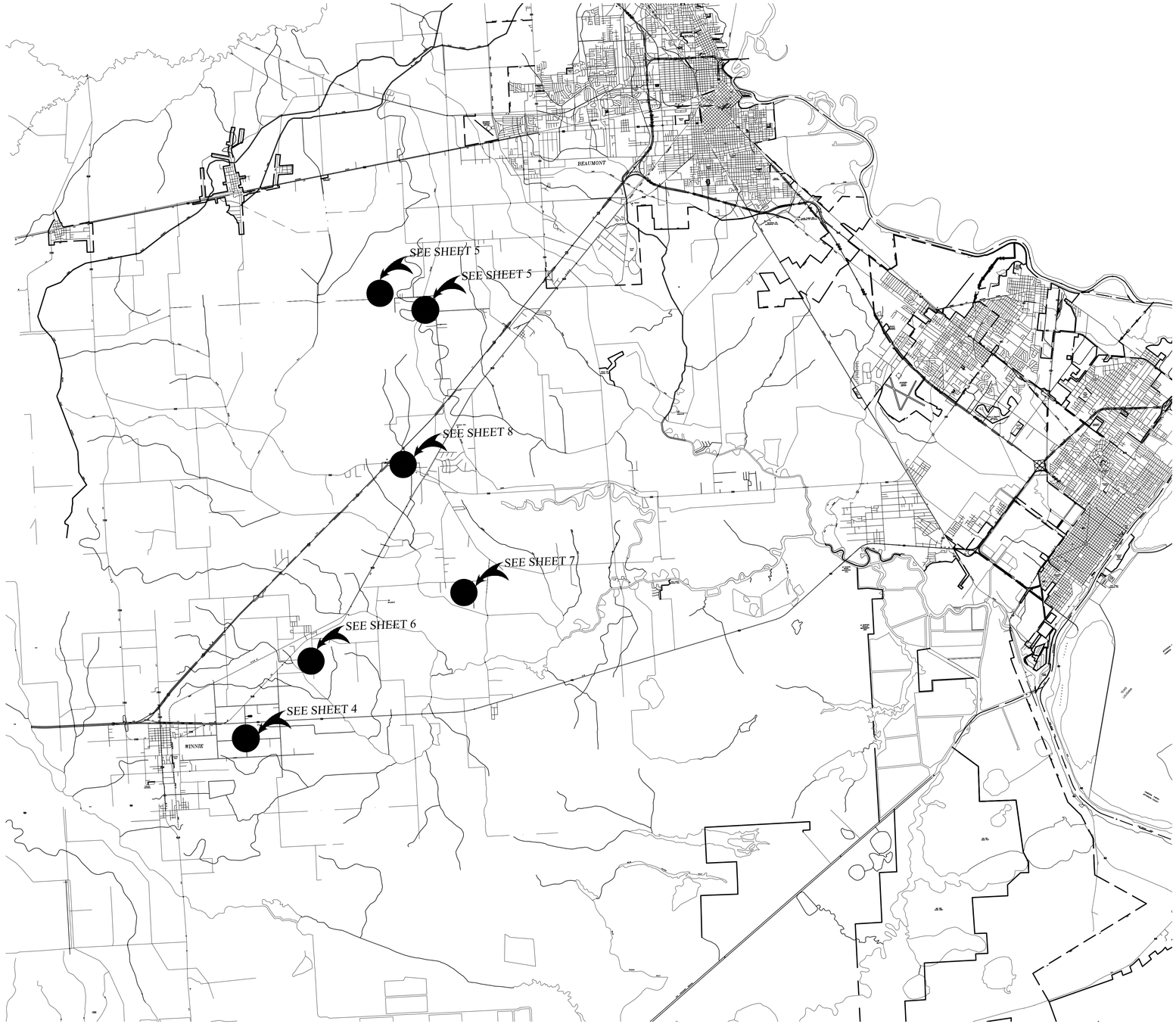

N

SCALE: NTS

O:\PROJECTS LJA B000 - BXXX\B857-JEFFERSON COUNTY\1003 - GLO CDBG PHASE VI - GRINDER PUMP STATION\CAD\B857-1003-03 OVERALL PROJECT LOCATION MAP.DWG

Date : 2/11/2021
File Name : B857/1003
File Drawer No. : B857/1003/CAD

STATE OF TEXAS
TOBY J. DAVIS
81919
REGISTERED PROFESSIONAL ENGINEER

THE SEAL APPEARING ON THIS DOCUMENT WAS AUTHORIZED BY TOBY J. DAVIS, P.E. 81919,
ON 2/10, 2021

No.	Revisions	By	Checked	Date

LJA Engineering, Inc.
2615 Calder Avenue, Suite 500
Beaumont, Texas 77702
Phone 409.833.3363
Fax 409.833.0317
FRN - F-1386

JEFFERSON COUNTY, TEXAS PHASE IV
FIRST TIME SANITARY SEWER PROJECT
CDBG PROJECT NO. 7218240

OVERALL PROJECT LOCATION MAP

Action	Name	Date
Design	TJD	01/21
Drawn	RH	01/21
Checked	JAD	01/21
Approved	TJD	01/21
Scale	AS SHOWN	
Sheet	3 Of 19	

O:\PROJECTS LJA B000 - BXXX\B857-JEFFERSON COUNTY\1003 - GLO CDBG PHASE VI - GRINDER PUMP STATION\CAD\B857-1003-04-08 INDEX MAP.DWG

Date : 2/11/2021
File Name : B857/1003
File Drawer No. : B857/1003/CAD

STATE OF TEXAS
TOBY J. DAVIS
81919
REGISTERED
PROFESSIONAL ENGINEER

THE SEAL APPEARING ON THIS DOCUMENT WAS AUTHORIZED BY TOBY J. DAVIS, P.E. 81919, ON 2/10, 2021

No.	Revisions	By	Checked	Date

LJA Engineering, Inc.
2615 Calder Avenue, Suite 500
Beaumont, Texas 77702
Phone 409.833.3363
Fax 409.833.0317
FRN - F-1386

JEFFERSON COUNTY, TEXAS PHASE IV
FIRST TIME SANITARY SEWER PROJECT
CDBG PROJECT NO. 7218240

HOUSE INDEX MAPS

Action	Name	Date
Design	TJD	01/21
Drawn	RH	01/21
Checked	JAD	01/21
Approved	TJD	01/21
Scale	AS SHOWN	
Sheet	4 of 19	

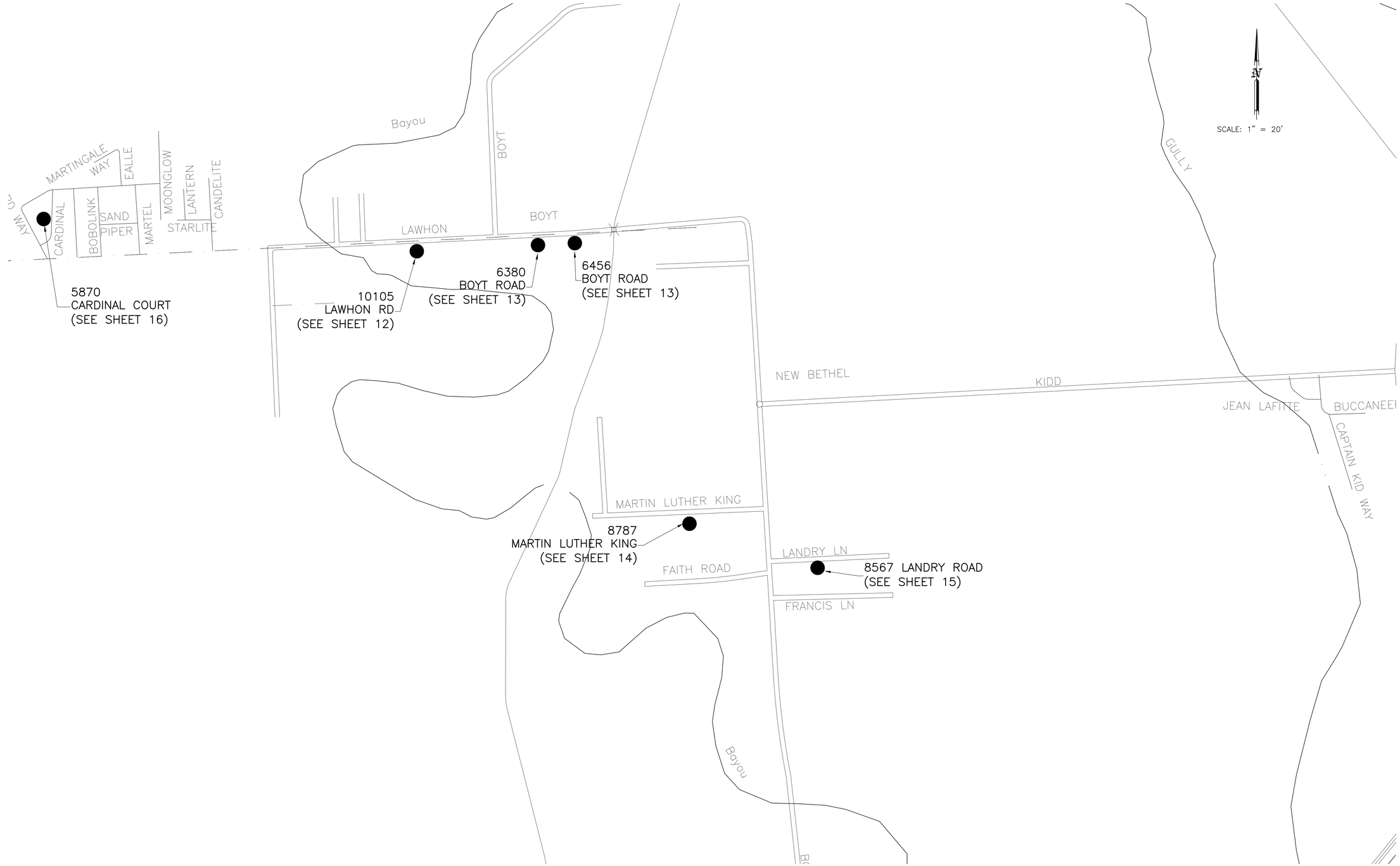

O:\PROJECTS LJA B000 - BXXX\B857-JEFFERSON COUNTY\1003 - GLO CDBG PHASE VI - GRINDER PUMP STATION\CAD\B857-1003-04-08 INDEX MAP.DWG

Date : 2/11/2021
File Name : B857/1003
File Drawer No. : B857/1003/CAD

STATE OF TEXAS
TOBY J. DAVIS
81919
REGISTERED PROFESSIONAL ENGINEER

THE SEAL APPEARING ON THIS DOCUMENT WAS AUTHORIZED BY TOBY J. DAVIS, P.E. 81919, ON 2/10, 2021

No.	Revisions	By	Checked	Date

LJA Engineering, Inc.
2615 Calder Avenue, Suite 500
Beaumont, Texas 77702
Phone 409.833.3363
Fax 409.833.0317
FRN - F-1386

JEFFERSON COUNTY, TEXAS PHASE IV
FIRST TIME SANITARY SEWER PROJECT
CDBG PROJECT NO. 7218240

HOUSE INDEX MAPS

Action	Name	Date
Design	TJD	01/21
Drawn	RH	01/21
Checked	JAD	01/21
Approved	TJD	01/21
Scale	AS SHOWN	
Sheet	5 Of 19	

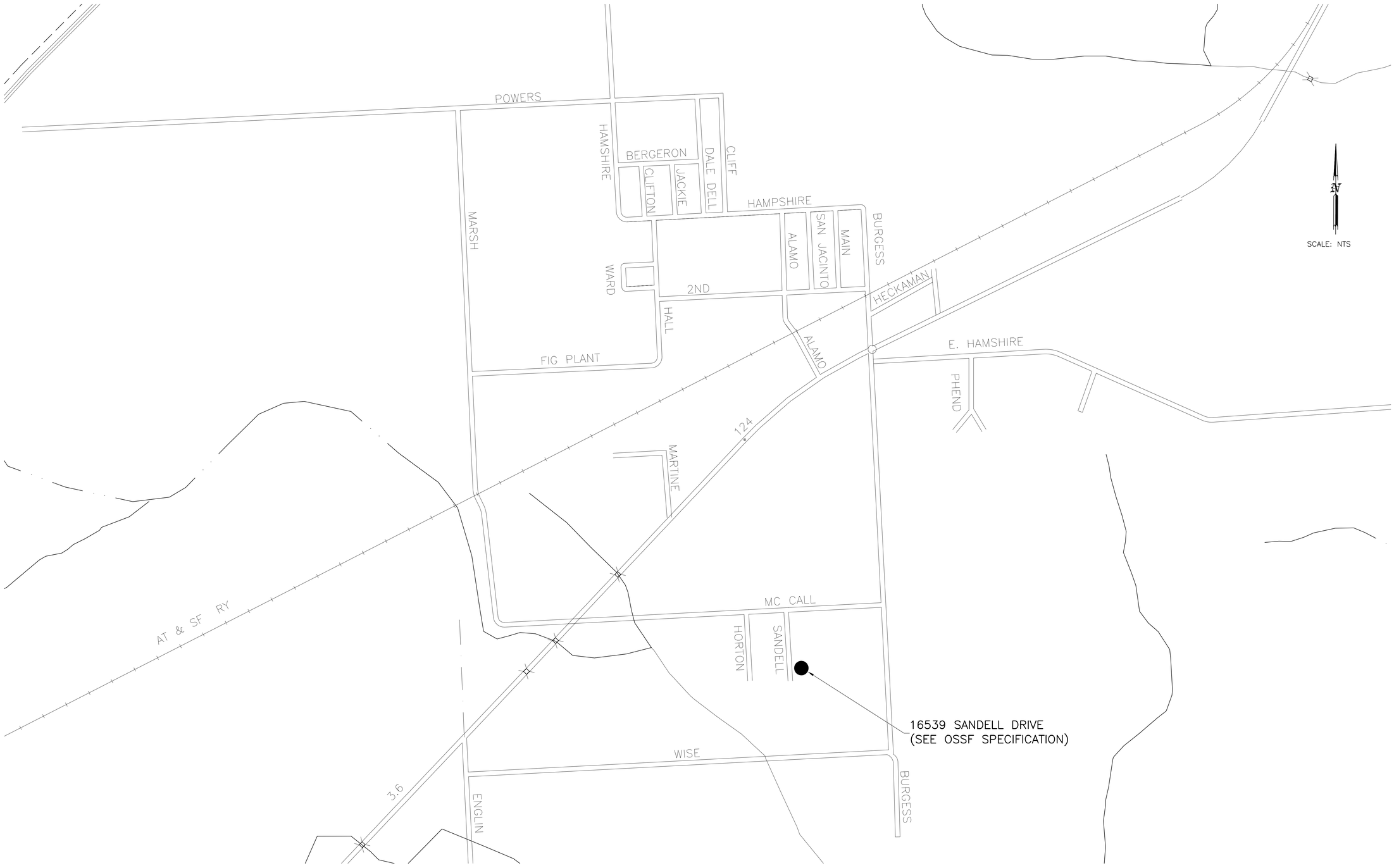

O:\PROJECTS LJA B000 - BXXX\B857-JEFFERSON COUNTY\1003 - GLO CDBG PHASE VI - GRINDER PUMP STATION\CAD\B857-1003-04-08 INDEX MAP.DWG

Date : 2/11/2021
File Name : B857/1003
File Drawer No. : B857/1003/CAD

STATE OF TEXAS
TOBY J. DAVIS
81919
REGISTERED PROFESSIONAL ENGINEER

THE SEAL APPEARING ON THIS DOCUMENT WAS AUTHORIZED BY TOBY J. DAVIS, P.E. 81919, ON 2/10, 2021

No.	Revisions	By	Checked	Date

LJA Engineering, Inc.
2615 Calder Avenue, Suite 500
Beaumont, Texas 77702
Phone 409.833.3363
Fax 409.833.0317
FRN - F-1386

JEFFERSON COUNTY, TEXAS PHASE IV
FIRST TIME SANITARY SEWER PROJECT
CDBG PROJECT NO. 7218240

HOUSE INDEX MAPS

Action	Name	Date
Design	TJD	01/21
Drawn	RH	01/21
Checked	JAD	01/21
Approved	TJD	01/21
Scale	AS SHOWN	
Sheet	6 Of 19	

O:\PROJECTS LJA B000 - BXXX\B857-JEFFERSON COUNTY\1003 - GLO CDBG PHASE VI - GRINDER PUMP STATION\CAD\B857-1003-04-08 INDEX MAP.DWG

Date : 2/11/2021
File Name : B857/1003
File Drawer No. : B857/1003/CAD

STATE OF TEXAS
TOBY J. DAVIS
81919
REGISTERED PROFESSIONAL ENGINEER

THE SEAL APPEARING ON THIS DOCUMENT WAS AUTHORIZED BY TOBY J. DAVIS, P.E. 81919,
ON 2/10, 2021

No.	Revisions	By	Checked	Date

LJA Engineering, Inc.
2615 Calder Avenue, Suite 500
Beaumont, Texas 77702
Phone 409.833.3363
Fax 409.833.0317
FRN - F-1386

JEFFERSON COUNTY, TEXAS PHASE IV
FIRST TIME SANITARY SEWER PROJECT
CDBG PROJECT NO. 7218240

HOUSE INDEX MAPS

Action	Name	Date
Design	TJD	01/21
Drawn	RH	01/21
Checked	JAD	01/21
Approved	TJD	01/21
Scale	AS SHOWN	
Sheet	7 of 19	

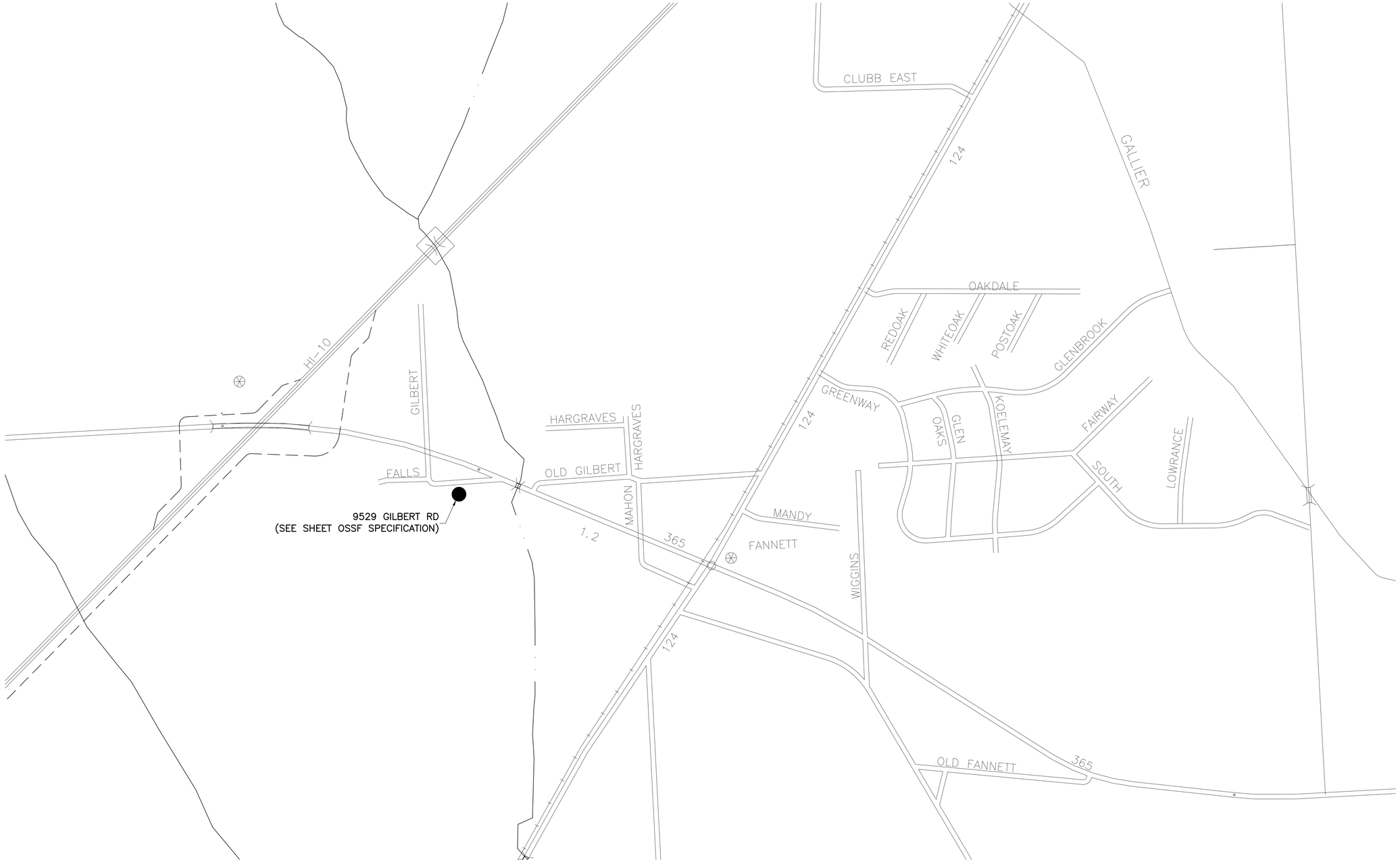

O:\PROJECTS LJA B000 - BXXX\B857-JEFFERSON COUNTY\1003 - GLO CDBG PHASE VI - GRINDER PUMP STATION\CAD\B857-1003-04-08 INDEX MAP.DWG

Date : 2/11/2021
File Name : B857/1003
File Drawer No. : B857/1003/CAD

STATE OF TEXAS
TOBY J. DAVIS
81919
REGISTERED PROFESSIONAL ENGINEER

THE SEAL APPEARING ON THIS DOCUMENT WAS AUTHORIZED BY TOBY J. DAVIS, P.E. 81919,
ON 2/10, 2021

No.	Revisions	By	Checked	Date

LJA Engineering, Inc.
2615 Calder Avenue, Suite 500
Beaumont, Texas 77702
Phone 409.833.3363
Fax 409.833.0317
FRN - F-1386

JEFFERSON COUNTY, TEXAS PHASE IV
FIRST TIME SANITARY SEWER PROJECT
CDBG PROJECT NO. 7218240

HOUSE INDEX MAPS

Action	Name	Date
Design	TJD	01/21
Drawn	RH	01/21
Checked	JAD	01/21
Approved	TJD	01/21
Scale	AS SHOWN	
Sheet	6 of 19	

N

SCALE: 1" = 60'

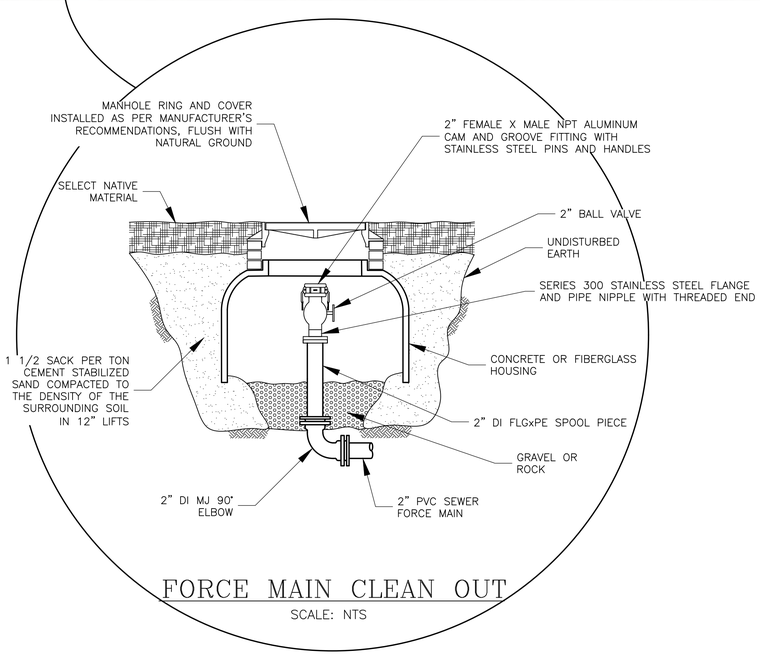

FORCE MAIN CLEAN OUT

SCALE: NTS

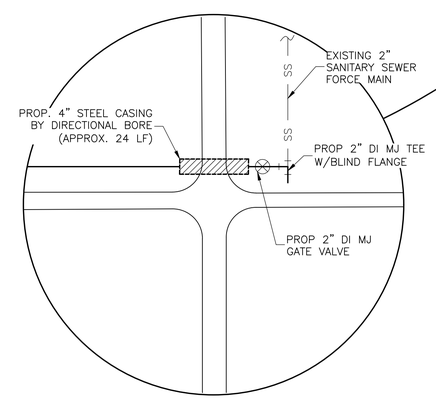

LEGEND

PP	POWER POLE		MANHOLE
LP	LIGHT POLE	CO	CLEAN OUT
FH	FIRE HYDRANT		PROPOSED SANITARY SEWER LINE
GA	GUY ANCHOR		PROPOSED WATER LINE
TS	TRAFFIC SIGN	SS	SANITARY SEWER LINE
L.S.	LANDSCAPING	W	WATER LINE
TVJB	TV BOX	X	CHAIN LINK FENCE
WM	WATER METER	//	WOOD FENCE
ESB	ELECTRICAL SERVICE BOX	TEL	UNDERGROUND TELEPHONE LINE
TJB	TELEPHONE JUNCTION BOX	FO	UNDERGROUND FIBER OPTICS
RCP	REINFORCED CONCRETE PIPE	GAS	UNDERGROUND GAS LINE
CMP	CORRUGATED METAL PIPE	UGE	UNDERGROUND ELECTRIC LINE
	BUILDING	OHE	OVERHEAD ELECTRIC LINE
	CONCRETE		PROPERTY LINE
1234	ADDRESSES		BUSHES
			TREES

NOTE:
THE CONTRACTOR SHALL COORDINATE WITH THE ENGINEER AND OWNER ON THE EXACT LOCATION OF THE PROPOSED LPSS SYSTEM. THE LPSS SYSTEM LOCATION WILL VARY FOR EACH HOUSE

O:\PROJECTS LJA B000 - BXXX\B857-JEFFERSON COUNTY\1003 - GLO CDBG PHASE VI - GRINDER PUMP STATION\CAD\B857-1003-09-15 PLAN SHEETS.DWG

Date : 2/11/2021
File Name : B857/1003
File Drawer No. : B857/1003/CAD

STATE OF TEXAS — TOBY J. DAVIS — 81919 — REGISTERED PROFESSIONAL ENGINEER

THE SEAL APPEARING ON THIS DOCUMENT WAS AUTHORIZED BY TOBY J. DAVIS, P.E. 81919,
ON 2/10, 2021

No.	Revisions	By	Checked	Date

LJA Engineering, Inc.
2615 Calder Avenue, Suite 500
Beaumont, Texas 77702
Phone 409.833.3363
Fax 409.833.0317
FRN - F-1386

JEFFERSON COUNTY, TEXAS PHASE IV
FIRST TIME SANITARY SEWER PROJECT
CDBG PROJECT NO. 7218240

SANITARY SEWER PLAN SHEET

Action	Name	Date
Design	TJB	01/21
Drawn	RH	01/21
Checked	MM	01/21
Approved	TJB	01/21
Scale	AS SHOWN	
Sheet	9 of 19	

N

SCALE: 1" = 20'

LEGEND

PP	POWER POLE		MANHOLE
LP	LIGHT POLE	CO	CLEAN OUT
FH	FIRE HYDRANT		PROPOSED SANITARY SEWER LINE
GA	GUY ANCHOR		PROPOSED WATER LINE
TS	TRAFFIC SIGN	SS	SANITARY SEWER LINE
L.S.	LANDSCAPING	W	WATER LINE
TVJB	TV BOX	X	CHAIN LINK FENCE
WM	WATER METER	//	WOOD FENCE
ESB	ELECTRICAL SERVICE BOX	TEL	UNDERGROUND TELEPHONE LINE
TJB	TELEPHONE JUNCTION BOX	FO	UNDERGROUND FIBER OPTICS
RCP	REINFORCED CONCRETE PIPE	GAS	UNDERGROUND GAS LINE
CMP	CORRUGATED METAL PIPE	UGE	UNDERGROUND ELECTRIC LINE
	BUILDING	OHE	OVERHEAD ELECTRIC LINE
	CONCRETE		PROPERTY LINE
1234	ADDRESSES		BUSHES
			TREES

NOTE:
THE CONTRACTOR SHALL COORDINATE WITH THE ENGINEER AND OWNER ON THE EXACT LOCATION OF THE PROPOSED LPSS SYSTEM. THE LPSS SYSTEM LOCATION WILL VARY FOR EACH HOUSE

O:\PROJECTS LJA B000 - BXXX\B857-JEFFERSON COUNTY\1003 - GLO CDBG PHASE VI - GRINDER PUMP STATION\CAD\B857-1003-09-15 PLAN SHEETS.DWG

Date : 2/11/2021
File Name : B857/1003
File Drawer No. : B857/1003/CAD

STATE OF TEXAS
TOBY J. DAVIS
81919
REGISTERED PROFESSIONAL ENGINEER

THE SEAL APPEARING ON THIS DOCUMENT WAS AUTHORIZED BY TOBY J. DAVIS, P.E. 81919, ON 2/10, 2021

No.	Revisions	By	Checked	Date

LJA Engineering, Inc.
2615 Calder Avenue, Suite 500
Beaumont, Texas 77702
Phone 409.833.3363
Fax 409.833.0317
FRN - F-1386

JEFFERSON COUNTY, TEXAS PHASE IV
FIRST TIME SANITARY SEWER PROJECT
CDBG PROJECT NO. 7218240

SANITARY SEWER PLAN SHEET

Action	Name	Date
Design	TJB	01/21
Drawn	RH	01/21
Checked	MM	01/21
Approved	TJB	01/21
Scale	AS SHOWN	
Sheet	10 Of 19	

LEGEND

PP	POWER POLE		MANHOLE
LP	LIGHT POLE	CO	CLEAN OUT
FH	FIRE HYDRANT		PROPOSED SANITARY SEWER LINE
GA	GUY ANCHOR		PROPOSED WATER LINE
TS	TRAFFIC SIGN	SS	SANITARY SEWER LINE
L.S.	LANDSCAPING	W	WATER LINE
TVJB	TV BOX	X	CHAIN LINK FENCE
WM	WATER METER	//	WOOD FENCE
ESB	ELECTRICAL SERVICE BOX	TEL	UNDERGROUND TELEPHONE LINE
TJB	TELEPHONE JUNCTION BOX	FO	UNDERGROUND FIBER OPTICS
RCP	REINFORCED CONCRETE PIPE	GAS	UNDERGROUND GAS LINE
CMP	CORRUGATED METAL PIPE	UGE	UNDERGROUND ELECTRIC LINE
	BUILDING	OHE	OVERHEAD ELECTRIC LINE
	CONCRETE		PROPERTY LINE
1234	ADDRESSES		BUSHES
			TREES

NOTE:
THE CONTRACTOR SHALL COORDINATE WITH THE ENGINEER AND OWNER ON THE EXACT LOCATION OF THE PROPOSED LPSS SYSTEM. THE LPSS SYSTEM LOCATION WILL VARY FOR EACH HOUSE

O:\PROJECTS LJA B000 – BXXX\B857–JEFFERSON COUNTY\1003 – GLO CDBG PHASE VI – GRINDER PUMP STATION\CAD\B857–1003–09–15 PLAN SHEETS.DWG

Date : 2/11/2021
File Name : B857/1003
File Drawer No. : B857/1003/CAD

STATE OF TEXAS
TOBY J. DAVIS
81919
REGISTERED PROFESSIONAL ENGINEER

THE SEAL APPEARING ON THIS DOCUMENT WAS AUTHORIZED BY TOBY J. DAVIS, P.E. 81919, ON 2/10, 2021

No.	Revisions	By	Checked	Date

LJA Engineering, Inc.
2615 Calder Avenue, Suite 500
Beaumont, Texas 77702
Phone 409.833.3363
Fax 409.833.0317
FRN - F-1386

JEFFERSON COUNTY, TEXAS PHASE IV
FIRST TIME SANITARY SEWER PROJECT
CDBG PROJECT NO. 7218240

SANITARY SEWER PLAN SHEET

Action	Name	Date
Design	TJD	01/21
Drawn	RH	01/21
Checked	JAD	01/21
Approved	TJD	01/21
Scale	AS SHOWN	
Sheet	11 Of 19	

LEGEND

PP	POWER POLE		MANHOLE
LP	LIGHT POLE	CO	CLEAN OUT
FH	FIRE HYDRANT		PROPOSED SANITARY SEWER LINE
GA	GUY ANCHOR		PROPOSED WATER LINE
TS	TRAFFIC SIGN	SS	SANITARY SEWER LINE
L.S.	LANDSCAPING	W	WATER LINE
TVJB	TV BOX	X	CHAIN LINK FENCE
WM	WATER METER	//	WOOD FENCE
ESB	ELECTRICAL SERVICE BOX	TEL	UNDERGROUND TELEPHONE LINE
TJB	TELEPHONE JUNCTION BOX	FO	UNDERGROUND FIBER OPTICS
RCP	REINFORCED CONCRETE PIPE	GAS	UNDERGROUND GAS LINE
CMP	CORRUGATED METAL PIPE	UGE	UNDERGROUND ELECTRIC LINE
	BUILDING	OHE	OVERHEAD ELECTRIC LINE
	CONCRETE		PROPERTY LINE
1234	ADDRESSES		BUSHES
			TREES

NOTE:
THE CONTRACTOR SHALL COORDINATE WITH THE ENGINEER AND OWNER ON THE EXACT LOCATION OF THE PROPOSED LPSS SYSTEM. THE LPSS SYSTEM LOCATION WILL VARY FOR EACH HOUSE

O:\PROJECTS LJA B000 - BXXX\B857-JEFFERSON COUNTY\1003 - GLO CDBG PHASE VI - GRINDER PUMP STATION\CAD\B857-1003-09-15 PLAN SHEETS.DWG

Date : 2/11/2021
File Name : B857/1003
File Drawer No. : B857/1003/CAD

STATE OF TEXAS
TOBY J. DAVIS
81919
REGISTERED PROFESSIONAL ENGINEER

THE SEAL APPEARING ON THIS DOCUMENT WAS AUTHORIZED BY TOBY J. DAVIS, P.E. 81919,
ON 2/10, 2021

No.	Revisions	By	Checked	Date

LJA Engineering, Inc.
2615 Calder Avenue, Suite 500
Beaumont, Texas 77702
Phone 409.833.3363
Fax 409.833.0317
FRN - F-1386

JEFFERSON COUNTY, TEXAS PHASE IV
FIRST TIME SANITARY SEWER PROJECT
CDBG PROJECT NO. 7218240

SANITARY SEWER PLAN SHEET

Action	Name	Date
Design	TJD	01/21
Drawn	RH	01/21
Checked	JAD	01/21
Approved	TJD	01/21
Scale	AS SHOWN	
Sheet	12 Of 19	

N

SCALE: 1" = 20'

LEGEND

PP	POWER POLE		MANHOLE
LP	LIGHT POLE	CO	CLEAN OUT
FH	FIRE HYDRANT		PROPOSED SANITARY SEWER LINE
GA	GUY ANCHOR		PROPOSED WATER LINE
TS	TRAFFIC SIGN	SS	SANITARY SEWER LINE
L.S.	LANDSCAPING	W	WATER LINE
TVJB	TV BOX	X	CHAIN LINK FENCE
WM	WATER METER	//	WOOD FENCE
ESB	ELECTRICAL SERVICE BOX	TEL	UNDERGROUND TELEPHONE LINE
TJB	TELEPHONE JUNCTION BOX	FO	UNDERGROUND FIBER OPTICS
RCP	REINFORCED CONCRETE PIPE	GAS	UNDERGROUND GAS LINE
CMP	CORRUGATED METAL PIPE	UGE	UNDERGROUND ELECTRIC LINE
	BUILDING	OHE	OVERHEAD ELECTRIC LINE
	CONCRETE		PROPERTY LINE
1234	ADDRESSES		BUSHES
			TREES

NOTE:
THE CONTRACTOR SHALL COORDINATE WITH THE ENGINEER AND OWNER ON THE EXACT LOCATION OF THE PROPOSED LPSS SYSTEM. THE LPSS SYSTEM LOCATION WILL VARY FOR EACH HOUSE

O:\PROJECTS LJA B000 - BXXX\B857-JEFFERSON COUNTY\1003 - GLO CDBG PHASE VI - GRINDER PUMP STATION\CAD\B857-1003-09-15 PLAN SHEETS.DWG

Date : 2/11/2021
File Name : B857/1003
File Drawer No. : B857/1003/CAD

STATE OF TEXAS
TOBY J. DAVIS
81919
REGISTERED PROFESSIONAL ENGINEER

THE SEAL APPEARING ON THIS DOCUMENT WAS AUTHORIZED BY TOBY J. DAVIS, P.E. 81919, ON 2/10, 2021

No.	Revisions	By	Checked	Date

LJA Engineering, Inc.
2615 Calder Avenue, Suite 500
Beaumont, Texas 77702
Phone 409.833.3363
Fax 409.833.0317
FRN - F-1386

JEFFERSON COUNTY, TEXAS PHASE IV
FIRST TIME SANITARY SEWER PROJECT
CDBG PROJECT NO. 7218240

SANITARY SEWER PLAN SHEET

Action	Name	Date
Design	TJD	01/21
Drawn	RH	01/21
Checked	JAD	01/21
Approved	TJD	01/21
Scale	AS SHOWN	
Sheet	13 of 19	

N

SCALE: 1" = 20'

LEGEND

PP	POWER POLE		MANHOLE
LP	LIGHT POLE	CO	CLEAN OUT
FH	FIRE HYDRANT		PROPOSED SANITARY SEWER LINE
GA	GUY ANCHOR		PROPOSED WATER LINE
TS	TRAFFIC SIGN	SS	SANITARY SEWER LINE
L.S.	LANDSCAPING	W	WATER LINE
TVJB	TV BOX	X	CHAIN LINK FENCE
WM	WATER METER	//	WOOD FENCE
ESB	ELECTRICAL SERVICE BOX	TEL	UNDERGROUND TELEPHONE LINE
TJB	TELEPHONE JUNCTION BOX	FO	UNDERGROUND FIBER OPTICS
RCP	REINFORCED CONCRETE PIPE	GAS	UNDERGROUND GAS LINE
CMP	CORRUGATED METAL PIPE	UGE	UNDERGROUND ELECTRIC LINE
	BUILDING	OHE	OVERHEAD ELECTRIC LINE
	CONCRETE		PROPERTY LINE
1234	ADDRESSES		BUSHES
			TREES

NOTE:
THE CONTRACTOR SHALL COORDINATE WITH THE ENGINEER AND OWNER ON THE EXACT LOCATION OF THE PROPOSED LPSS SYSTEM. THE LPSS SYSTEM LOCATION WILL VARY FOR EACH HOUSE

O:\PROJECTS LJA B000 – BXXX\B857–JEFFERSON COUNTY\1003 – GLO CDBG PHASE VI – GRINDER PUMP STATION\CAD\B857–1003–09–15 PLAN SHEETS.DWG

Date : 2/11/2021
File Name : B857/1003
File Drawer No. : B857/1003/CAD

STATE OF TEXAS
TOBY J. DAVIS
81919
REGISTERED
PROFESSIONAL ENGINEER

THE SEAL APPEARING ON THIS DOCUMENT WAS AUTHORIZED BY TOBY J. DAVIS, P.E. 81919,

ON 2/10, 2021

No.	Revisions	By	Checked	Date

LJA Engineering, Inc.
2615 Calder Avenue, Suite 500
Beaumont, Texas 77702
Phone 409.833.3363
Fax 409.833.0317
FRN - F-1386

JEFFERSON COUNTY, TEXAS PHASE IV
FIRST TIME SANITARY SEWER PROJECT
CDBG PROJECT NO. 7218240

SANITARY SEWER PLAN SHEET

Action	Name	Date
Design	TJD	01/21
Drawn	RH	01/21
Checked	JAD	01/21
Approved	TJD	01/21
Scale	AS SHOWN	
Sheet	14 Of 19	

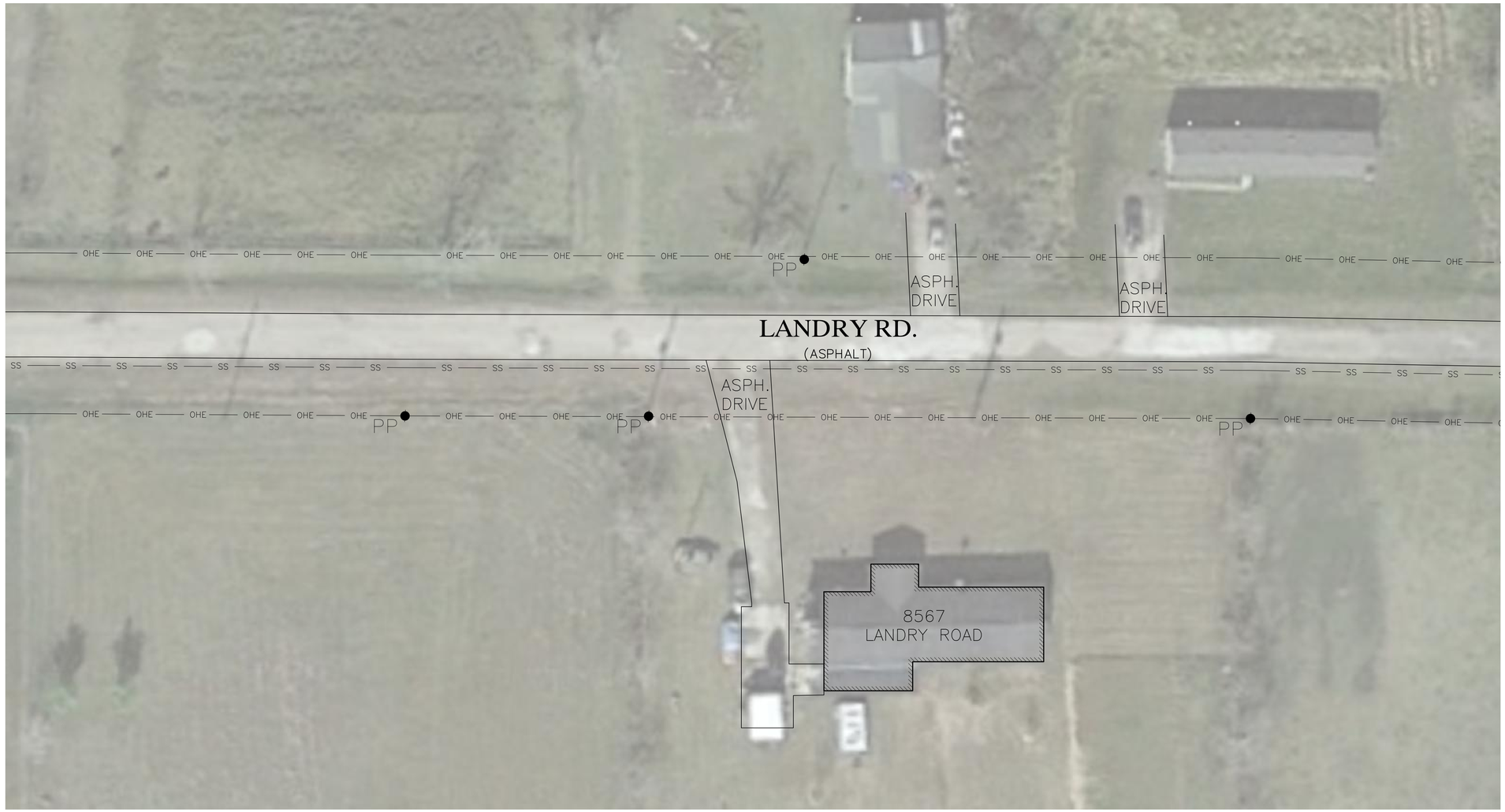

SCALE: 1" = 20'

LEGEND

PP	POWER POLE		MANHOLE
LP	LIGHT POLE	CO	CLEAN OUT
FH	FIRE HYDRANT		PROPOSED SANITARY SEWER LINE
GA	GUY ANCHOR		PROPOSED WATER LINE
TS	TRAFFIC SIGN	SS	SANITARY SEWER LINE
L.S.	LANDSCAPING	W	WATER LINE
TVJB	TV BOX	X	CHAIN LINK FENCE
WM	WATER METER	//	WOOD FENCE
ESB	ELECTRICAL SERVICE BOX	TEL	UNDERGROUND TELEPHONE LINE
TJB	TELEPHONE JUNCTION BOX	FO	UNDERGROUND FIBER OPTICS
RCP	REINFORCED CONCRETE PIPE	GAS	UNDERGROUND GAS LINE
CMP	CORRUGATED METAL PIPE	UGE	UNDERGROUND ELECTRIC LINE
	BUILDING	OHE	OVERHEAD ELECTRIC LINE
	CONCRETE		PROPERTY LINE
1234	ADDRESSES		BUSHES
			TREES

NOTE:
THE CONTRACTOR SHALL COORDINATE WITH THE ENGINEER AND OWNER ON THE EXACT LOCATION OF THE PROPOSED LPSS SYSTEM. THE LPSS SYSTEM LOCATION WILL VARY FOR EACH HOUSE

O:\PROJECTS LJA B000 - BXXX\B857-JEFFERSON COUNTY\1003 - GLO CDBG PHASE VI - GRINDER PUMP STATION\CAD\B857-1003-09-15 PLAN SHEETS.DWG

Date : 2/11/2021
File Name : B857/1003
File Drawer No. : B857/1003/CAD

STATE OF TEXAS
TOBY J. DAVIS
81919
REGISTERED PROFESSIONAL ENGINEER

THE SEAL APPEARING ON THIS DOCUMENT WAS AUTHORIZED BY TOBY J. DAVIS, P.E. 81919,
ON 2/10, 2021

No.	Revisions	By	Checked	Date

LJA Engineering, Inc.
2615 Calder Avenue, Suite 500
Beaumont, Texas 77702
Phone 409.833.3363
Fax 409.833.0317
FRN - F-1386

JEFFERSON COUNTY, TEXAS PHASE IV
FIRST TIME SANITARY SEWER PROJECT
CDBG PROJECT NO. 7218240

SANITARY SEWER PLAN SHEETS

Action	Name	Date
Design	TJD	01/21
Drawn	RH	01/21
Checked	JAD	01/21
Approved	TJD	01/21
Scale	AS SHOWN	
Sheet	15 of 19	

SCALE: 1" = 20'

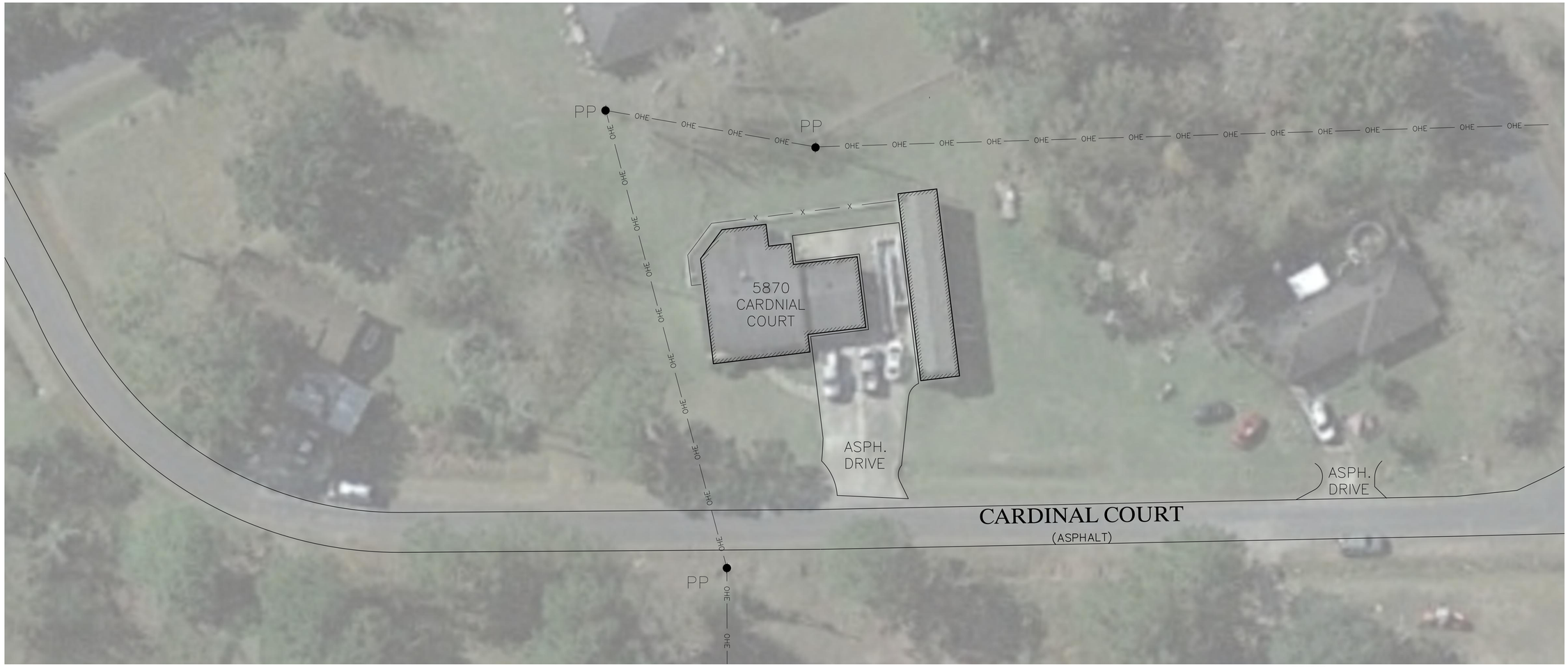

LEGEND

PP	POWER POLE		MANHOLE
LP	LIGHT POLE	CO	CLEAN OUT
FH	FIRE HYDRANT		PROPOSED SANITARY SEWER LINE
GA	GUY ANCHOR		PROPOSED WATER LINE
TS	TRAFFIC SIGN	SS	SANITARY SEWER LINE
L.S.	LANDSCAPING	W	WATER LINE
TVJB	TV BOX	X	CHAIN LINK FENCE
WM	WATER METER	//	WOOD FENCE
ESB	ELECTRICAL SERVICE BOX	TEL	UNDERGROUND TELEPHONE LINE
TJB	TELEPHONE JUNCTION BOX	FO	UNDERGROUND FIBER OPTICS
RCP	REINFORCED CONCRETE PIPE	GAS	UNDERGROUND GAS LINE
CMP	CORRUGATED METAL PIPE	UGE	UNDERGROUND ELECTRIC LINE
	BUILDING	OHE	OVERHEAD ELECTRIC LINE
	CONCRETE		PROPERTY LINE
1234	ADDRESSES		BUSHES
			TREES

NOTE:
THE CONTRACTOR SHALL COORDINATE WITH THE ENGINEER AND OWNER ON THE EXACT LOCATION OF THE PROPOSED LPSS SYSTEM. THE LPSS SYSTEM LOCATION WILL VARY FOR EACH HOUSE

O:\PROJECTS LJA B000 – BXXX\B857–JEFFERSON COUNTY\1003 – GLO CDBG PHASE VI – GRINDER PUMP STATION\CAD\B857–1003–09–15 PLAN SHEETS.DWG

Date : 2/11/2021
File Name : B857/1003
File Drawer No. : B857/1003/CAD

STATE OF TEXAS
TOBY J. DAVIS
81919
REGISTERED
PROFESSIONAL ENGINEER

THE SEAL APPEARING ON THIS DOCUMENT WAS AUTHORIZED BY TOBY J. DAVIS, P.E. 81919,
ON 2/10, 2021

No.	Revisions	By	Checked	Date

LJA Engineering, Inc.
2615 Calder Avenue, Suite 500
Beaumont, Texas 77702
Phone 409.833.3363
Fax 409.833.0317
FRN - F-1386

JEFFERSON COUNTY, TEXAS PHASE IV
FIRST TIME SANITARY SEWER PROJECT
CDBG PROJECT NO. 7218240

SANITARY SEWER PLAN SHEET

Action	Name	Date
Design	TJD	01/21
Drawn	RH	01/21
Checked	JAD	01/21
Approved	TJD	01/21
Scale	AS SHOWN	
Sheet	16 of 19	

GENERAL NOTES:

1. CONTRACTOR SHALL COORDINATE WITH JEFFERSON COUNTY AND THE ENGINEER 72 HOURS PRIOR TO BEGINNING WORK.
2. CONTRACTOR SHALL NOTIFY PROPERTY OWNERS OF THE WORK AND COORDINATE ACCESS TO THE PROPERTIES.
3. THE CONTRACTOR SHALL BE RESPONSIBLE FOR RESTORATION OF ALL PROPERTY CORNERS DISTURBED DURING CONSTRUCTION.
4. ALL UTILITIES SHOWN ARE FOR INFORMATIONAL PURPOSES ONLY, AND THE EXACT LOCATION MUST BE DETERMINED BY THE CONTRACTOR PRIOR TO ANY CONSTRUCTION.
5. CONTRACTOR SHALL BE RESPONSIBLE FOR RETURNING THE PROJECT SITE(S) TO ITS (THEIR) ORIGINAL CONDITION OR BETTER.
6. THE CONTRACTOR SHALL BE RESPONSIBLE FOR DISPOSAL OF THE CONTENTS OF ALL SEPTIC TANKS TAKEN OUT OF SERVICE DURING THE COURSE OF THIS PROJECT.
7. CONTRACTOR SHALL DISPOSE OF ALL DEBRIS CREATED DURING THE COURSE OF THIS PROJECT IN ACCORDANCE WITH ALL LOCAL STATE AND FEDERAL REGULATIONS.
8. CONTRACTOR SHALL AVOID DISTURBING ANY FENCES. ANY FENCES DISTURBED SHALL BE RESTORED AT THE CONTRACTORS EXPENSE.
9. CONTRACTOR SHALL REMOVE AND REINSTALL EXISTING MAIL BOXES AS REQUIRED TO INSTALL THE PROPOSED FORCE MAIN. MAIL BOXES SHALL BE REINSTALLED AS SOON AS POSSIBLE OR INSTALLED IN A TEMPORARY MANNER SO AS NOT TO DISTURB MAIL DELIVERY SERVICE UNTIL THEY CAN BE PERMANENTLY INSTALLED.
10. CONTRACTOR SHALL REPAIR ANY SLAB OR DRIVEWAY DAMAGED DURING THE INSTALLATION OF THE SEWER IMPROVEMENT AT THE CONTRACTORS EXPENSE.
11. CONTRACTOR SHALL BE RESPONSIBLE FOR CONNECTING ALL SANITARY SEWER SERVICES FROM EACH HOUSE TO THE PROPOSED GRINDER STATION.
12. CONTRACTOR SHALL BE RESPONSIBLE FOR ABANDONING ALL SEPTIC TANKS AT EACH LOCATION.
13. IF THE EXISTING BREAKER BOX IS AT CAPACITY THE CONTRACTOR SHALL REPLACE EXISTING BREAKERS WITH TANDEM (SLIMLINE) BREAKERS OF EQUAL SIZE.

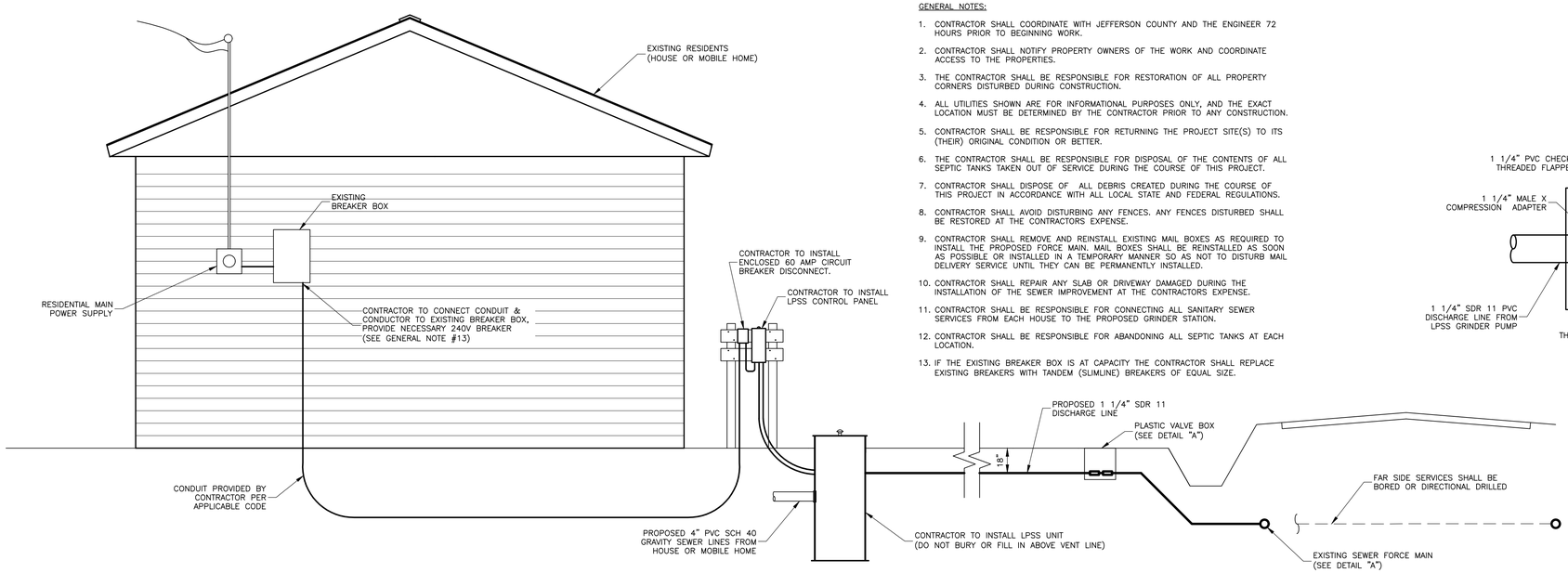

TYPICAL RESIDENTIAL INSTALLATION
TANK, PUMP, AND APPURTENANCES
SCALE: NTS

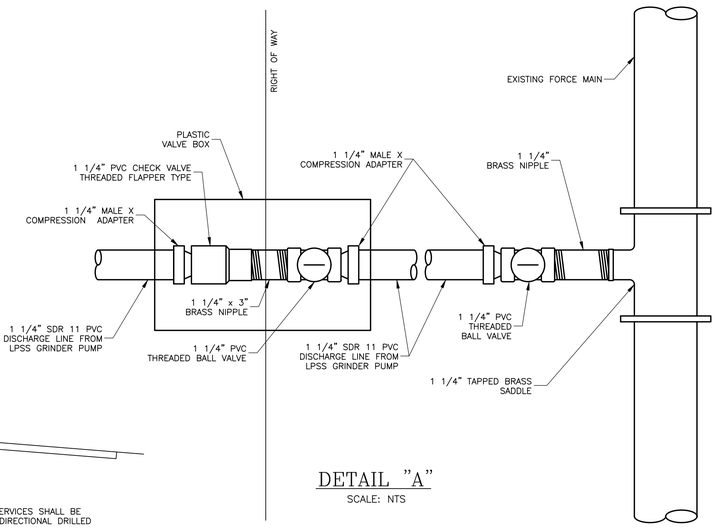

DETAIL "A"
SCALE: NTS

NOTES:

CONTRACTOR SHALL PUMP OUT CONTENTS OF EXISTING SEPTIC TANK AND DISPOSE OF IN ACCORDANCE WITH ALL LOCAL, STATE, AND FEDERAL LAWS. HE SHALL MANIFEST EVIDENCE OF SUCH DISPOSAL.

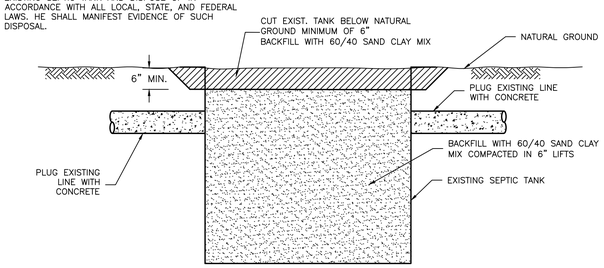

TYPICAL ABANDONMENT OF
EXISTING SEPTIC TANK
SCALE: NTS

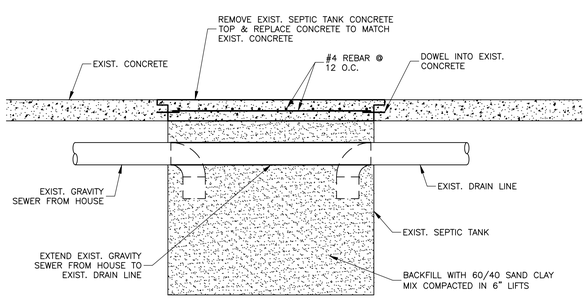

TYPICAL ABANDONMENT OF
EXISTING SEPTIC TANK UNDER CONCRETE
SCALE: NTS

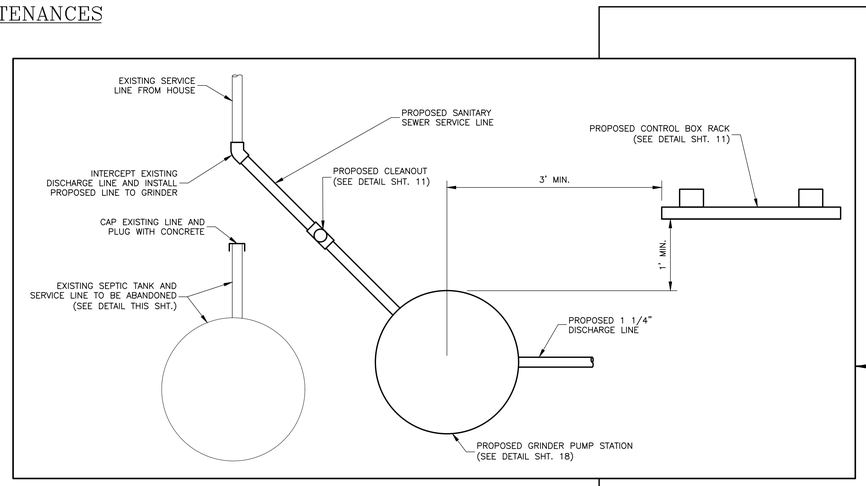

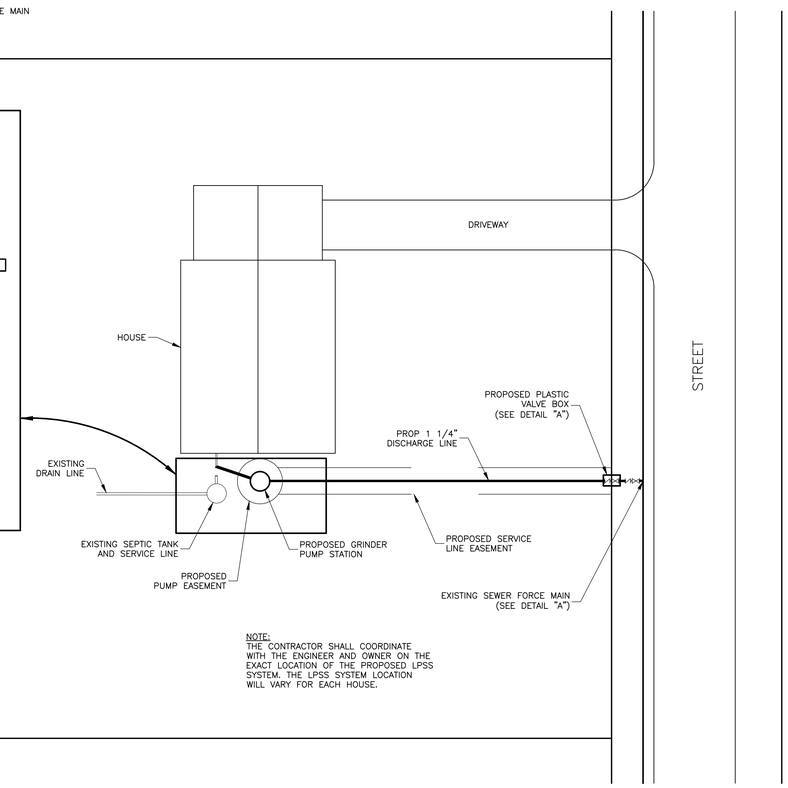

NOTE:
THE CONTRACTOR SHALL COORDINATE WITH THE ENGINEER AND OWNER ON THE EXACT LOCATION OF THE PROPOSED LPSS SYSTEM. THE LPSS SYSTEM LOCATION WILL VARY FOR EACH HOUSE.

TYPICAL GRINDER PUMP STATION SITE PLAN
SCALE: NTS

O:\PROJECTS LJA B000 - BXXX\B857-JEFFERSON COUNTY\1003 - GLO CDBG PHASE VI - GRINDER PUMP STATION\CAD\B857-1003-16-17 SAN SEWER DETAILS.DWG

Plot Date : 2/11/2021
File Name : B857/1003
File Drawer No. : B857/1003/CAD

STATE OF TEXAS
TOBY J. DAVIS
81919
REGISTERED PROFESSIONAL ENGINEER

THE SEAL APPEARING ON THIS DOCUMENT WAS AUTHORIZED BY TOBY J. DAVIS, P.E. 81919,
ON 2/10, 2021

No.	Revisions	By	Checked	Date

LJA Engineering, Inc.
2615 Calder Avenue, Suite 500
Beaumont, Texas 77702
Phone 409.833.3363
Fax 409.833.0317
FRN - F-1386

JEFFERSON COUNTY, TEXAS PHASE IV
FIRST TIME SANITARY SEWER PROJECT
CDBG PROJECT NO. 7218240

SANITARY SEWER DETAILS

Action	Name	Date
Design	TJD	01/21
Drawn	RH	01/21
Checked	JAD	01/21
Approved	TJD	01/21
Scale	AS SHOWN	
Sheet	17 of 19	

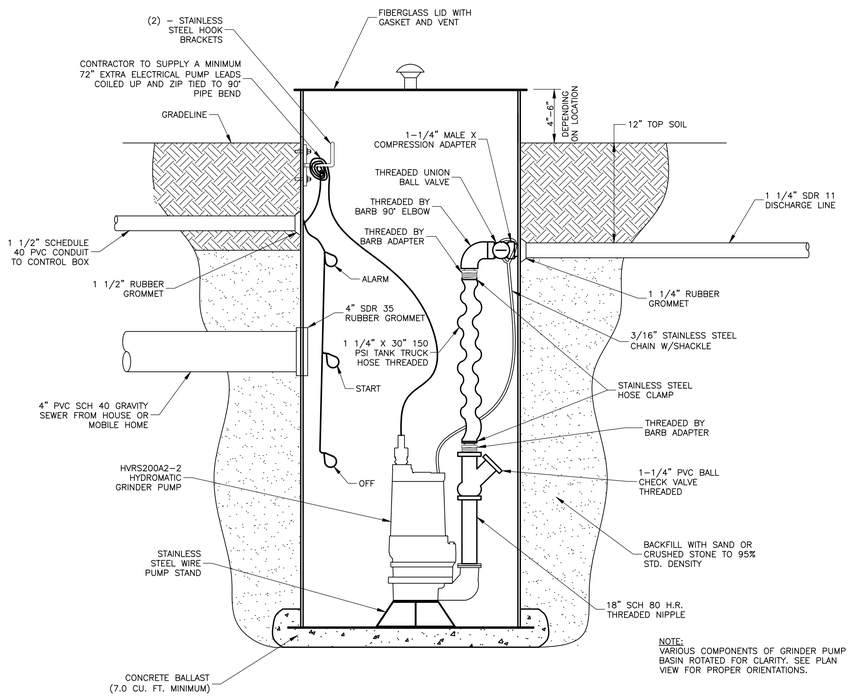

24"x60" FIBERGLASS BASIN

SCALE: 1 1/2" = 1'–0"

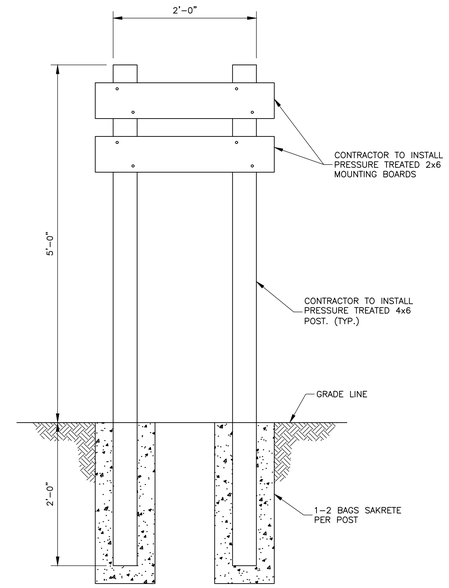

CONTROL BOX RACK DETAIL

SCALE: 1" = 1'–0"

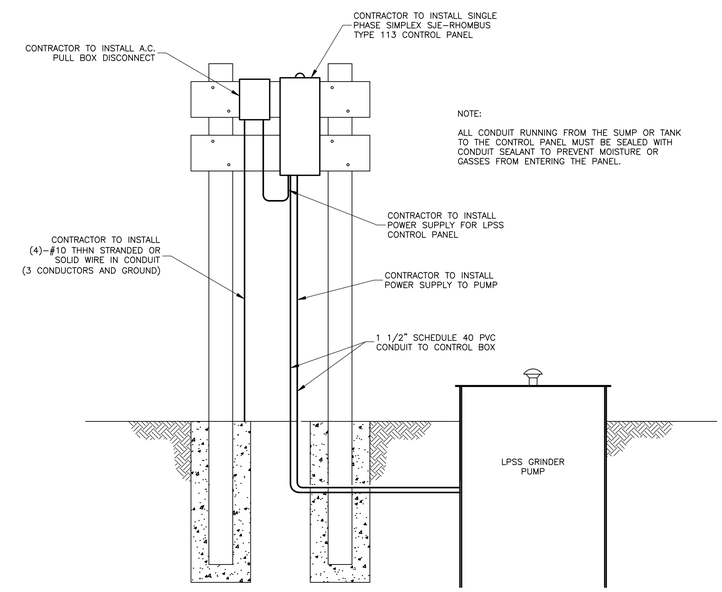

CONTROL BOX MOUNT DETAIL

SCALE: 1" = 1'–0"

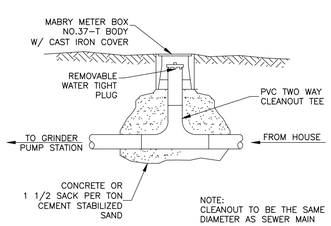

TYPICAL SANITARY SEWER LINE CLEANOUT

SCALE: NTS

O:\PROJECTS LJA B000 – BXXX\B857–JEFFERSON COUNTY\1003 – GLO CDBG PHASE VI – GRINDER PUMP STATION\CAD\B857–1003–16–17 SAN SEWER DETAILS.DWG

Plot Date : 2/11/2021
File Name : B857/1003
File Drawer No. : B857/1003/CAD

STATE OF TEXAS — TOBY J. DAVIS — 81919 — REGISTERED PROFESSIONAL ENGINEER

THE SEAL APPEARING ON THIS DOCUMENT WAS AUTHORIZED BY TOBY J. DAVIS, P.E. 81919, ON 2/10, 2021

No.	Revisions	By	Checked	Date

LJA Engineering, Inc.
2615 Calder Avenue, Suite 500
Beaumont, Texas 77702
Phone 409.833.3363
Fax 409.833.0317
FRN - F-1386

JEFFERSON COUNTY, TEXAS PHASE IV
FIRST TIME SANITARY SEWER PROJECT
CDBG PROJECT NO. 7218240

SANITARY SEWER DETAILS

Action	Name	Date
Design	TJD	01/21
Drawn	RH	01/21
Checked	JAD	01/21
Approved	TJD	01/21
Scale	AS SHOWN	
Sheet	18 of 19	

NOTES:

TRENCH WIDTH AS NECESSARY FOR TRENCH PROTECTION REQUIRED FOR TRENCH DEPTHS GREATER THAN 5' DEEP).

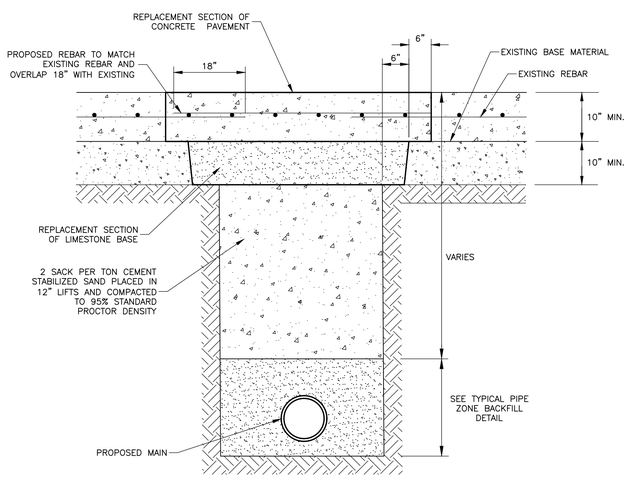

TYPICAL SURFACE RESTORATION IN CONCRETE PAVEMENT

NTS

NOTES:

TRENCH WIDTH AS NECESSARY FOR TRENCH PROTECTION (REQUIRED FOR TRENCH DEPTHS GREATER THAN 5' DEEP).

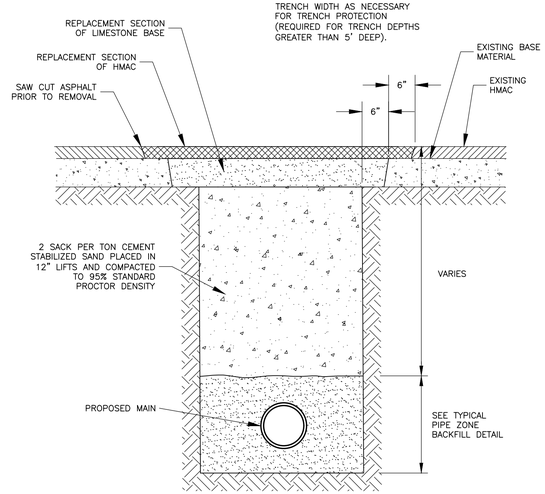

TYPICAL SURFACE RESTORATION IN ASPHALT PAVEMENT

NTS

NOTES:

TRENCH WIDTH AS NECESSARY FOR TRENCH PROTECTION (REQUIRED FOR TRENCH DEPTHS GREATER THAN 5' DEEP).

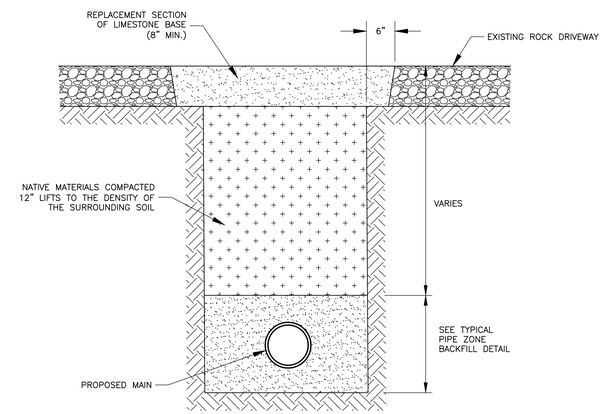

TYPICAL SURFACE RESTORATION IN ROCK DRIVEWAY

NTS

NOTES:

TRENCH WIDTH AS NECESSARY FOR TRENCH PROTECTION (REQUIRED FOR TRENCH DEPTHS GREATER THAN 5' DEEP).

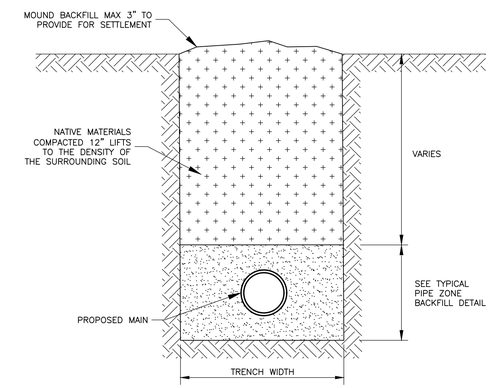

TYPICAL SURFACE RESTORATION OUTSIDE OF PAVEMENT

NTS

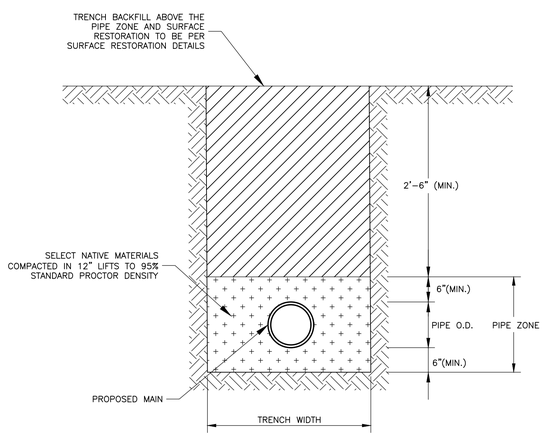

TYPICAL PIPE ZONE BACKFILL FOR MAINS INSIDE OF PAVEMENT

NTS

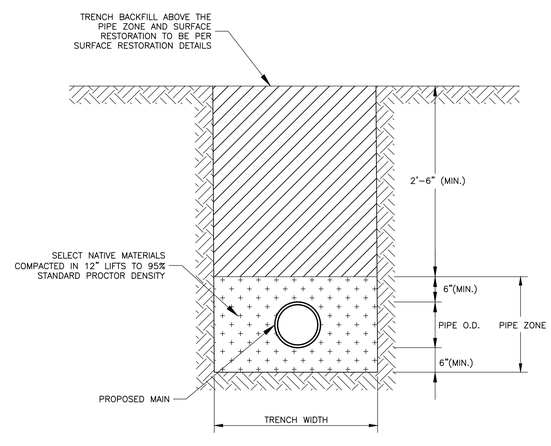

TYPICAL PIPE ZONE BACKFILL FOR MAINS OUTSIDE OF PAVEMENT

NTS

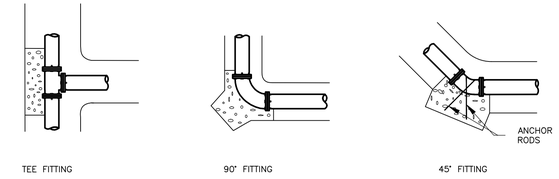

FITTING	PIPE SIZE (IN)	BEARING SURFACE (SF)	SIZE
90° BEND	2	0.59	0.8' x 0.8'
	3	1.33	1.2' x 1.2'
	6	5.33	2.3' x 2.3'
45° BEND	2	0.32	0.6' x 0.6'
	3	0.72	0.8' x 0.8'
	6	2.89	1.7' x 1.7'
22.5° BEND	2	0.16	0.4' x 0.4'
	3	0.37	0.6' x 0.6'
	6	1.47	1.2' x 1.2'
TEE, VALVE, OR PLUG	2	0.42	0.6' x 0.6'
	3	0.94	1.0' x 1.0'
	6	3.77	1.9' x 1.9'

1. Areas shown are based on a soil bearing value of 1500 psf and a pipe thrust with 200 psi test pressure.
2. The Contractor shall be responsible for verifying the soil bearing value for the soil encountered.
3. Thrust blocks shall be cast against undisturbed soil using 2500 psi concrete.
4. Joints shall not be encased in concrete.
5. All anchor rods, mechanical joint nuts and bolts, and restraining flange nuts and bolts shall be coated with coal tar epoxy.
6. Underground pipe clamps in conjunction with concrete thrust blocking shall be used where encroachment of adjacent piping prevents normal thrust blocking methods. Such clamps shall be at no extra cost to owner.

TYPICAL THRUST BLOCKING

NTS

O:\PROJECTS LJA B000 – BXXX\B857–JEFFERSON COUNTY\1003 – GLO CDBG PHASE VI – GRINDER PUMP STATION\CAD\B857–1003–18 TRENCH DETAILS.DWG

Plot Date : 2/11/2021
File Name : B857/1003
File Drawer No. : B857/1003/CAD

STATE OF TEXAS — TOBY J. DAVIS — 81919 — REGISTERED PROFESSIONAL ENGINEER

THE SEAL APPEARING ON THIS DOCUMENT WAS AUTHORIZED BY TOBY J. DAVIS, P.E. 81919, ON 2/10, 2021

No.	Revisions	By	Checked	Date

LJA Engineering, Inc.
2615 Calder Avenue, Suite 500
Beaumont, Texas 77702
Phone 409.833.3363
Fax 409.833.0317
FRN - F-1386

JEFFERSON COUNTY, TEXAS PHASE IV
FIRST TIME SANITARY SEWER PROJECT
CDBG PROJECT NO. 7218240

TRENCH DETAILS

Action	Name	Date
Design	TJD	01/21
Drawn	RH	01/21
Checked	JAD	01/21
Approved	TJD	01/21
Scale	AS SHOWN	
Sheet	19 of 19	