JEFFERSON COUNTY PURCHASING DEPARTMENT

Deborah L. Clark, Purchasing Agent

1149 Pearl Street **OFFICE MAIN: (409) 835-8593**
1st Floor, Beaumont, TX 77701 **FAX: (409) 835-8456**

LEGAL NOTICE
Advertisement for Invitation for Bids

January 17, 2023

Notice is hereby given that sealed bids will be accepted by the Jefferson County Purchasing Department for Invitation for Bid **(IFB 22-073/JW) Main Terminal HVAC Rehabilitation at the Jack Brooks Regional Airport.** This project is 100% funded by the Federal Aviation Administration (FAA) Airport Improvement Program (AIP Grant #37). Specifications for this project may be obtained from the Jefferson County website, https://www.co.jefferson.tx.us/Purchasing/ or by calling 409-835-8593.

Bids are to be sealed and addressed to the Purchasing Agent with the bid number and name marked on the outside of the envelope or box. Bidders shall forward an original and two (2) copies of their bid to the address shown below. Jefferson County does not accept bids submitted electronically. Late bids will be rejected as non-responsive. Bids will be publicly opened and read aloud in the Jefferson County Engineering Department Conference Room (5th Floor, Historic Courthouse) 1149 Pearl Street, Beaumont, Texas 77701, at the time and date below. Bidders are invited to attend the sealed bid opening.

BID NAME:	**Main Terminal HVAC Rehabilitation at the Jack Brooks Regional Airport**
BID NUMBER:	**IFB 22-073/JW**
DUE BY TIME/DATE:	**11:00 AM CT, Wednesday, February 15, 2023**
MAIL OR DELIVER TO:	**Jefferson County Purchasing Department** **1149 Pearl Street, 1st Floor** **Beaumont, Texas 77701**

There will be a **Pre-Bid Conference and Walk-Through** at **2:00 PM CT**, **Thursday, January 26, 2023** at the Airport Administration Conference Room located at 5000 Jerry Ware Blvd. Beaumont, Texas 77705. **As access to certain areas of the airport is limited due to federal regulations, this conference will be the Bidder's only opportunity to view secured areas of the project.**

The County shall require the bidder to furnish a bid security in the amount of five percent (5%) of the total contract cost. The bid bond must be executed with a surety company authorized to do business in the State of Texas. Within ten (10) days after the date of the signing of a contract, the bidder shall furnish a performance bond to the County for the full amount of the contract, if the contract exceeds one hundred thousand dollars ($100,000). If the contract is for one hundred thousand dollars ($100,000) or less, the County may provide that no money be paid to the contractor until completion and acceptance of the work or the fulfillment of the purchase obligation to the County.

Any questions relating to these bid requirements should be directed to Jamey West, Contract Specialist with the Jefferson County Purchasing Department at 409-835-8793 or via email at: Jamey.West@jeffco.tx.us

Jefferson County encourages Disadvantaged Business Enterprises (DBEs), Minority/Women Business Enterprises (M/WBEs), and Historically Underutilized Businesses (HUBs) to participate in the bidding process. Jefferson County does not discriminate on the basis of race, color, national origin, sex, religion, age or disability in employment, or the provisions of services. Individuals requiring special accommodations are requested to contact our office at least seven (7) days prior to the bid due date at 409-835-8593.

All interested firms are invited to submit a bid in accordance with the terms and conditions stated in this bid.

Bidders are strongly encouraged to carefully read the entire invitation, as failure to return and/or complete all required documentation will result in a response being declared as non-responsive.

Deborah L. Clark, Purchasing Agent
Jefferson County, Texas

PUBLISH:
Beaumont Enterprise & Port Arthur News: January 18, 2023 and January 25, 2023
The Examiner: January 19, 2023

SECTION 1: GENERAL CONDITIONS OF BIDDING AND TERMS OF CONTRACT 5
1. BIDDING. 5
1.1 BIDS. 5
1.2 AUTHORIZED SIGNATURES. 5
1.3 LATE BIDS. 5
1.4 WITHDRAWAL OF BID PRIOR TO OPENING. 5
1.5 WITHDRAWAL OF BID AFTER OPENING. 5
1.6 BID AMOUNTS. 5
1.7 EXCEPTIONS AND/OR SUBSTITUTIONS. 5
1.8 ALTERNATES. 5
1.9 DESCRIPTIONS. 6
1.10 BID ALTERATIONS. 6
1.11 TAX EXEMPT STATUS. 6
1.12 QUANTITIES. 6
1.13 BID AWARD. 6
1.14 SILENCE OF SPECIFICATIONS FOR COMPLETE UNITS. 6
1.15 ADDENDA. 6
1.16 GENERAL BID BOND/SURETY REQUIREMENTS. 6
1.17 GENERAL INSURANCE REQUIREMENTS. 6
1.18 RESPONSIVENESS. 6
1.19 RESPONSIBLE STANDING OF BIDDER. 7
1.20 CONFIDENTIAL/PROPRIETARY INFORMATION. 7
1.21 PUBLIC BID OPENING. 7
2. PERFORMANCE. 7
2.1 DESIGN, STRENGTH, AND QUALITY. 7
2.2 AGE AND MANUFACTURE. 7
2.3 DELIVERY LOCATION. 7
2.4 DELIVERY SCHEDULE. 8
2.5 DELIVERY CHARGES. 8
2.6 INSTALLATION CHARGES. 8
2.7 OPERATING INSTRUCTIONS AND TRAINING. 8
2.8 STORAGE. 8
2.9 COMPLIANCE WITH FEDERAL, STATE, COUNTY, AND LOCAL LAWS. 8
2.10 OSHA. 8
2.11 PATENTS AND COPYRIGHTS. 8
2.12 SAMPLES, DEMONSTRATIONS, AND TESTING. 8
2.13 ACCEPTABILITY. 8
2.14 MAINTENANCE. 9

2.15 MATERIAL SAFETY DATA SHEETS. 9
2.16 EVALUATION. 9
3. PURCHASE ORDERS AND PAYMENT. 9
3.1 PURCHASE ORDERS. 9
3.2 INVOICES. 9
3.3 PROMPT PAYMENT. 9
3.4 FUNDING. 10
4. CONTRACT. 10
4.1 CONTRACT DEFINITION. 10
4.2 CHANGE ORDER. 10
4.3 PRICE RE-DETERIMINATION. 10
4.4 TERMINATION. 10
4.5 CONFLICT OF INTEREST. 10
4.6 INTEREST BY PUBLIC OFFICIALS. 10
4.7 PRE-AWARD/CONTRACT CONTACT BETWEEN COUNTY AND VENDORS. 11
4.8 INJURIES OR DAMAGES RESULTING FROM NEGLIGENCE. 11
4.9 WARRANTY. 11
4.10 UNIFORM COMMERCIAL CODE. 11
4.11 VENUE. 11
4.12 SALE, ASSIGNMENT, OR TRANSFER OF CONTRACT. 11
4.13 SILENCE OF SPECIFICATIONS. 12
5. REJECTION OR WITHDRAWAL. 12
6. EMERGENCY/DECLARED DISASTER REQUIREMENTS. 12
7. AWARD. 12
8. CONTRACT. 13
9. WAIVER OF SUBROGATION. 13
10. FISCAL FUNDING. 13
11. BID RESULTS. 13
12. CHANGES AND ADDENDA TO BID DOCUMENTS. 13
13. SPECIFICATIONS. 13
14. DELIVERY. 13
15. INTERPRETATION OF BID AN/OR CONTRACT DOCUMENTS. 14
16. CURRENCY. 14
17. PRICING. 14
18. NOTICE TO PROCEED/PURCHASE ORDER. 14
19. CERTIFICATION. 14
20. DEFINITIONS. 14
21. DISADVANTAGED BUSINESS ENTERPRISES (DBEs), MINORITY/WOMEN BUSINESS ENTERPRISES (M/WBEs), AND HISTORICALLY UNDERUTILIZED BUSINESSES (HUBs) 14
Affirmative Steps pursuant to 2 CFR §200.321 14

SECTION 2: FEDERAL MANDATED CONTRACT PROVISIONS 16
BREACH OF CONTRACT TERMS/REMEDIES 16
TERMINATION OF CONTRACT (FOR CAUSE AND CONVENIENCE) 16
EQUAL EMPLOYMENT OPPORTUNITY 16
DAVIS-BACON REQUIREMENTS 17
COPELAND ANTI-KICKBACK 17
CONTRACT WORK HOURS AND SAFETY STANDARDS ACT REQUIREMENTS 17
RIGHTS TO INVENTIONS 18
CLEAN AIR AND WATER POLLUTION CONTROL 19
DEBARMENT AND SUSPENSION 19
LOBBYING AND INFLUENCING FEDERAL EMPLOYEES 19
PROCUREMENT OF RECOVERED MATERIALS 20
ACCESS TO RECORDS AND REPORTS 20
AFFIRMATIVE ACTION REQUIREMENT 21
Solicitation Clause: 21
BUY AMERICAN PREFERENCES 22
CIVIL RIGHTS 23
TITLE VI SOLICITATION NOTICE 23
DBE CONTRACT ASSURANCES 24
DISTRACTED DRIVING 25
COMPLIANCE WITH FEDERAL LAW, REGULATIONS, AND EXECUTIVE ORDERS 25
NO OBLIGATION BY FEDERAL GOVERNMENTS 25
PROGRAM FRAUD AND FALSE OR FRAUDULENT STATEMENTS OR RELATED ACTS 25
BYRD ANTI-LOBBYING CERTIFICATION 27
DEBARMENT/SUSPENSION CERTIFICATION 28
CIVIL RIGHTS COMPLIANCE PROVISIONS 29
EQUAL EMPLOYMENT OPPORTUNITY (Equal Opportunity Clause) 29
CIVIL RIGHTS COMPLIANCE PROVISIONS (CONTINUED) 30
SECTION 3: SPECIAL REQUIREMENTS/BID SUBMISSION INSTRUCTIONS 31
1. SUBMISSION OF BID 31
2. PRE-BID MEETING AND WALK-THROUGH 32
3. QUESTIONS/DEADLINE FOR QUESTIONS. 32
4. VENDOR REGISTRATION (System for Award Management). 32
5. FORM 1295 (Texas Ethics Commission) SUBMISSSION REQUIREMENT/INSTRUCTIONS FOR BIDDERS. 33
INSERTION PAGE: PROOF OF BIDDER'S SAM REGISTRATION 34
INSERTION PAGE: FORM 1295 (COMPLETED BY BIDDER) 36
SECTION 3: SPECIAL REQUIREMENTS/BID SUBMISSION INSTRUCTIONS (CONTINUED) 37
6. MULTIPLE VENDOR AWARD. 37
7. DELIVERY. 37
8. PAYMENT. 37

9. USAGE REPORTS 37
10. INSURANCE. 37
11. WORKERS' COMPENSATION INSURANCE 38
INSERTION PAGE: BIDDER'S CERTIFICATE OF INSURANCE 40
INSERTION PAGE: BIDDER'S BID SURETY. 41
BIDDER INFORMATION FORM 42
SECTION 4: SCOPE 43
BID FORM (PAGE 1 OF 4) 44
BID FORM (CONTINUED – PAGE 2 OF 4) 45
BID FORM (CONTINUED – PAGE 3 OF 4) 46
VENDOR REFERENCES FORM 47
SIGNATURE PAGE 48
CERTIFICATION REGARDING LOBBYING 49
CONFLICT OF INTEREST QUESTIONNAIRE 50
LOCAL GOVERNMENT OFFICER 51
CONFLICTS DISCLOSURE STATEMENT – OFFICE USE ONLY 51
GOOD FAITH EFFORT (GFE) DETERMINATION CHECKLIST 52
NOTICE OF INTENT (NOI) TO SUBCONTRACT WITH 53
DISADVANTAGED BUSINESS ENTERPRISE (DBE) 54
SUBCONTRACTING PARTICIPATION DECLARATION FORM 54
RESIDENCE CERTIFICATION/TAX FORM 58
HOUSE BILL 89 VERIFICATION 59
SENATE BILL 252 CERTIFICATION 60
BID AFFIDAVIT 61
TECHNICAL SPECIFICATIONS 1-221
DRAWINGS 1-17

BID SUBMISSIONS:

One (1) Original and Two (2) Bid Copies; with all copies to include a Completed Copy of this specifications packet, drawings, and project manuals **IN THEIR ENTIRETY**. Technical Specifications/Project manuals, and drawings -only- may be submitted as double-sided copies.

Each Bidder shall ensure that required parts of their bid submission are completed with accuracy and submitted as per the requirements within this specifications packet, including any addenda.

Additionally, Bidder shall monitor the Jefferson County Purchasing Department Website for any addenda, additional instructions, or bid updates. https://www.co.jefferson.tx.us/Purchasing/

Failure to return and/or complete all required documentation will result in a response being declared as non-responsive.

SECTION 1: GENERAL CONDITIONS OF BIDDING AND TERMS OF CONTRACT

By execution of this document, the Vendor accepts all general and special conditions of the contract as outlined below and, in the specifications, and plans.

1. BIDDING.

1.1 BIDS.

All bids must be submitted on the bid form furnished in this package.

1.2 AUTHORIZED SIGNATURES.

The bid must be executed personally by the Vendor, duly authorized partner of the partnership, or duly authorized officer of the corporation. If executed by an agent, a power of attorney or other evidence of authority to act on behalf of the Vendor shall accompany the bid to become a valid bid.

1.3 LATE BIDS.

Bids must be in the office of the Jefferson County Purchasing Agent before or at the specified time and date bids are due. Bids received after the submission deadline shall be rejected as non-responsive and returned unopened.

1.4 WITHDRAWAL OF BID PRIOR TO OPENING.

A bid may be withdrawn before the opening date by submitting a written request to the Purchasing Agent. If time allows, the Bidder may submit a new bid. Bidder assumes full responsibility for submitting a new bid before or at the specified time and date bids are due. Jefferson County reserves the right to withdraw a request for bids before the opening date.

1.5 WITHDRAWAL OF BID AFTER OPENING.

Bidder agrees that its offer may not be withdrawn or cancelled by the Vendor for a period of ninety (90) days following the date and time designated for the receipt of bids unless otherwise stated in the bid and/or specifications.

1.6 BID AMOUNTS.

Bids shall show net prices, extensions where applicable and net total. In case of conflict between unit price and extension, the unit price will govern. Any ambiguity in the bid as a result of omission, error, unintelligible or illegible wording shall be interpreted in the favor of Jefferson County.

1.7 EXCEPTIONS AND/OR SUBSTITUTIONS.

All bids meeting the intent of the specifications and plans will be considered for award. Vendors taking exception to the specifications and plans, or offering substitutions, shall state these exceptions in the section provided. If bid is made on an article other than the one specified, which a Bidder considers comparable, the name and grade of said article must be specified in the bid and sufficient specifications and descriptive data must accompany same to permit thorough evaluation. The absence of stated exceptions and/or substitutions shall indicate that the Vendor has not taken any exceptions to the specifications and shall be responsible to perform in strict accordance with the specifications. As a matter of practice, Jefferson County rejects exception(s) and /or substitutions as non-responsive but reserves the right to accept any and/or all of the exception(s) and/or substitution(s) deemed to be in the best **interest of Jefferson County.**

1.8 ALTERNATES.

The Invitation for Bid and/or specifications may expressly allow Bidder to submit an alternate bid. Presence of such an offer shall not be considered an indication of non-responsiveness.

1.9 DESCRIPTIONS.

Unless otherwise specified, any reference to make, manufacturer and/or model used in the bid specifications is merely descriptive and not restrictive, and is used only to indicate type, style, or quality of material desired.

1.10 BID ALTERATIONS.

Bids cannot be altered or amended after submission deadline. Any interlineations, alterations, or erasures made before opening time must be initialed by the signer of the bid, guaranteeing authenticity.

1.11 TAX EXEMPT STATUS.

Jefferson County is exempt from federal excise tax and state sales tax. Unless the bid form or specifications specifically indicate otherwise, the bid price must be net, exclusive of above-mentioned taxes and will be so construed. Therefore, the bid price shall not include taxes.

1.12 QUANTITIES.

Quantities indicated are estimated quantities only and are not a commitment to buy. Approximate usage does not constitute an order, but only implies the probable quantity that will be used. Commodities will be ordered on an as-needed basis. Bidder is responsible for accurate final counts.

1.13 BID AWARD.

Award of contract shall be made to the most responsible, responsive Bidder, whose offer is determined to be the best value, taking into consideration the relative importance of price. Jefferson County reserves the right to be the sole judge as to whether items bid will serve the purpose intended.

Jefferson County reserves the right to award based upon individual line items, sections or total bid.

1.14 SILENCE OF SPECIFICATIONS FOR COMPLETE UNITS.

All materials, equipment and/or parts that will become a portion of the completed work, including items not specifically stated herein but, necessary to render the service(s) complete and operational per the specifications, are to be included in the bid price. Vendor may be required to furnish evidence that the service, as bid, will meet or exceed these requirements.

1.15 ADDENDA.

Any interpretations, corrections or changes to the specifications and plans will be made by addenda no later than forty-eight (48) hours prior to the bid opening. Addenda will be posted on the Purchasing web site. Vendors are responsible for monitoring the web site in order to remain informed on addenda. Vendors shall acknowledge receipt of all addenda with submission of bid.

1.16 GENERAL BID BOND/SURETY REQUIREMENTS.

Failure to furnish bid bond/surety, if requested, will result in bid being declared non-responsive. Non-responsive bids will not be considered for award.

1.17 GENERAL INSURANCE REQUIREMENTS.

Failure to furnish Affidavit of Insurance, if required in these specifications, will result in bid being declared non-responsive. Non-responsive bids will not be considered for award.

1.18 RESPONSIVENESS.

A responsive bid shall substantially conform to the requirements of this Invitation to Bid and/or specifications

contained herein. Bidders who substitute any other terms, conditions, specifications and/or requirements or who qualify their bids in such a manner as to nullify or limit their liability to the contracting entity shall have their bids deemed non-responsive. Also, bids containing any clause that would limit contracting authority shall be considered non-responsive. Examples of non-responsive bids include but shall not be limited to: a) bids that fail to conform to required delivery schedules as set forth in the bid request; b) bids with prices qualified in such a manner that the bid price cannot be determined, such as with vague wording that may include "price in effect at the time of delivery," and c) bids made contingent upon award of other bids currently under consideration.

1.19 RESPONSIBLE STANDING OF BIDDER.

To be considered for award, Bidder must at least: have the ability to obtain adequate financial resources, be able to comply with required or proposed delivery/completion schedule, have a satisfactory record of performance; have a satisfactory record of integrity and ethics, and be otherwise qualified and eligible to receive award.

1.20 CONFIDENTIAL/PROPRIETARY INFORMATION.

If any material in the bid submission is considered by Bidder to be confidential or proprietary information (including manufacturing and/or design processes exclusive to the Bidder), Bidder **must** clearly mark the applicable pages of bid submission to indicate each claim of confidentiality. Additionally, Bidder must include a statement on company letterhead identifying all Bid Submission section(s) and page(s) that have been marked as confidential. Jefferson County will protect from public disclosure such portions of a bid, unless directed otherwise by legal authority, including existing open records acts. Merely making a blanket claim that the entire bid submission is protected from disclosure because it contains some proprietary information is not acceptable, and will make the entire bid submission subject to release under the Texas Public Information Act.

By submitting a bid, Bidder agrees to reproduction by Jefferson County, without cost or liability, of any copyrighted portions of Bidder's bid submission or other information submitted by Bidder.

1.21 PUBLIC BID OPENING.

Bidders are invited to be present at the opening of bids. After the official opening of bids, a period of not less than one week is necessary to evaluate bids. The amount of time necessary for bid evaluation may vary and is determined solely by the County. Following the bid evaluation, all bids submitted are available for public review.

2. PERFORMANCE.

2.1 DESIGN, STRENGTH, AND QUALITY.

Design, strength, and quality of materials and workmanship must conform to the highest standards of manufacturing and engineering practices. The apparent silence of specifications and/or plans as to any detailed description concerning any point shall be regarded as meaning that only the best commercial practices are to prevail. All interpretations of these specifications and/or plans shall be made on the basis of this statement.

2.2 AGE AND MANUFACTURE.

All tangible goods being bid must be new and unused, unless otherwise specified, in first-class condition, of current manufacture, and furnished ready to use. All items not specifically mentioned that are required for a complete unit shall be furnished.

2.3 DELIVERY LOCATION.

All deliveries will be made to the address(es) specified on the purchase order during normal working hours of 8:00 am CT to 4:00 pm CT, Monday through Friday, unless otherwise authorized by the Purchasing Agent or designee.

2.4 DELIVERY SCHEDULE.

Delivery time may be an important consideration in the evaluation of best value. The maximum number of days necessary for delivery ARO shall be stated in the space, if provided, on the bid form.

2.5 DELIVERY CHARGES.

All delivery and freight charges, F.O.B. destination shown on Jefferson County purchase order, as necessary to perform contract are to be included in the bid price.

2.6 INSTALLATION CHARGES.

All charges for assembly, installation and set-up shall be included in the bid price. Unless otherwise stated, assembly, installation and set-up will be required.

2.7 OPERATING INSTRUCTIONS AND TRAINING.

Clear and concise operating instructions and descriptive literature will be provided in English, if requested. On-site detailed training in the safe and efficient use and general maintenance of item(s) purchased shall be provided as needed at the request of Jefferson County. Instructions and training shall be at no additional cost to the County.

2.8 STORAGE.

Bidder agrees to provide storage of custom ordered materials, if requested, for up to thirty (30) calendar days.

2.9 COMPLIANCE WITH FEDERAL, STATE, COUNTY, AND LOCAL LAWS.

Bids must comply with all federal, state, county and local laws, including, but not limited to, all applicable standard safety, emission, and noise control requirements. Any vehicles or equipment shall contain all standard safety, emission, and noise control requirements required for the types and sizes of equipment at the time of their manufacture. The contractor agrees, during the performance of work or service, to comply with all applicable codes and ordinances of Jefferson County or the State of Texas as they may apply, as these laws may now read, or as they may hereafter be changed or amended.

2.10 OSHA.

The Bidder will certify all equipment complies with all regulations and conditions stipulated under the Williams-Steiger Occupational Safety and Health Act of 1971, as amended. The successful Bidder will further certify that all items furnished under this project will conform and comply with federal and State of Texas OSHA standards. The successful Bidder will agree to indemnify and hold harmless Jefferson County for any and all damages that may be assessed against the County.

2.11 PATENTS AND COPYRIGHTS.

The successful Vendor agrees to protect the County from claims involving infringements of patents and/or copyrights.

2.12 SAMPLES, DEMONSTRATIONS, AND TESTING.

At Jefferson County's request and direction, Bidder shall provide product samples and/or testing of items bid to ensure compliance with specifications. Samples, demonstrations and/or testing may be requested at any point prior to or following bid award. Samples, demonstrations and/or testing may be requested upon delivery and/or any point during the term of resulting contract. All samples (including return thereof), demonstrations, and/or testing shall be at the expense of the Bidder/Vendor.

2.13 ACCEPTABILITY.

All articles enumerated in the bid shall be subject to inspection by an officer designated for that purpose by Jefferson

County. If found inferior to the quality called for, or not equal in value to the specifications, deficient in workmanship or otherwise, this fact shall be certified to the Purchasing Agent, who shall have the right to reject the whole or any part of the same. Items and/or work determined to be contrary to specifications must be replaced at the vendor's expense. Inferior items not retrieved by the vendor within thirty (30) calendar days, or an otherwise agreed upon time, shall become the property of the County. If disposal of such items warrants an expense, an amount equal to the disposal expense will be deducted from amounts payable to the vendor.

2.14 MAINTENANCE.

Maintenance required for equipment bid should be available in Jefferson County by a manufacturer authorized maintenance facility. Cost for this service shall be shown on the bid sheet as requested or on a separate sheet, as required. If Jefferson County opts to include maintenance, it shall be so stated in the purchase order and said cost will be included. Service will commence only upon expiration of applicable warranties and should be priced accordingly.

2.15 MATERIAL SAFETY DATA SHEETS.

Under the "Hazardous Communications Act," common known as the "Texas Right to Know Act," a Bidder must provide the user department, with each delivery, material safety data sheets which are applicable to hazardous substances defined in the Act. Failure of the Bidder to furnish this documentation, will be cause to reject any bid applying thereto.

2.16 EVALUATION.

Evaluation shall be used as a determinant as to which services are the most efficient and/or most economical for the County. It shall be based on all factors having a bearing on price and performance of the items in the user environment. All bids are subject to tabulation by the Jefferson County Purchasing Department and recommendation to Jefferson County Commissioners' Court. Compliance with all bid requirements and needs of the using department are considered in evaluating bids. Pricing is not the only criteria for making a recommendation. The Jefferson County Purchasing Department reserves to right to contact any Bidder, at any time, to clarify, verify or requirement information with regard to this bid.

3. PURCHASE ORDERS AND PAYMENT.

3.1 PURCHASE ORDERS.

A purchase order(s) shall be generated by the Jefferson County Purchasing Agent to the successful vendor. The purchase order number must appear on all itemized invoices and packing slips. The County will not be held responsible for any work orders placed and/or performed without a valid current purchase order number. Payment will be made for all services rendered and accepted by the contract administrator for which a valid invoice has been received.

3.2 INVOICES.

All invoices shall reference the Purchase Order number. Invoices shall reference the bid item number or a detailed description for each item invoiced. If an item purchased and itemized on the invoice does not correspond to an item in any of the categories awarded to the vendor, invoice shall reference the item as "N/C" to indicate that it is a non-contract item. This requirement is to assist the County in verifying contract pricing on all invoices. Payment will be made under terms of net thirty (30) days unless otherwise agreed upon by seller and the purchasing department.

3.3 PROMPT PAYMENT.

In accordance with the State of Texas Prompt Payment Act, Article 601f V.T.C.S., payment will be made after receive and acceptance by the County of the merchandise ordered and of a valid invoice. Successful Bidder(s) is required to pay subcontractors within ten (10) days after the successful Bidder receives payment from the County.

3.4 FUNDING.

Jefferson County is operated and funded on an October 1 to September 30 basis; accordingly, the County reserves the right to terminate, without liability to the County, any contract for which funding is not available.

4. CONTRACT.

4.1 CONTRACT DEFINITION.

The General Conditions of Bidding and Terms of Contract, Specifications, Plans, Bidding Forms, Addenda, and any other documents made a part of this bid shall constitute the complete bid. This bid, when duly accepted by Jefferson County, shall constitute a contract equally binding between the successful Bidder and Jefferson County.

4.2 CHANGE ORDER.

No different or additional terms will become part of this contract with the exception of a change order. No oral statement of any person shall modify or otherwise change, or affect the terms, conditions or specifications stated in the resulting contract. All change orders to the contract will be made in writing and at the discretion and approval of Jefferson County. No change order will be binding unless signed by an authorized representative of the County and the vendor.

4.3 PRICE RE-DETERIMINATION.

A price re-determination may be requested at the time of annual renewal. All requests for price re-determination shall be in written form. Cause for such request, i.e., manufacturer's direct cost, postage rates, Railroad Commission rates, Federal/State minimum wage law, Federal/State unemployment taxes, F.I.C.A, Insurance Coverage Rates, etc., shall be substantiated in writing by the source of the cost increase. The Bidder's past experience of honoring contracts at the bid price will be an important consideration in the evaluation of the lowest and best bid. Jefferson County reserves the right to accept or reject any/all requests for price re-determination as it deems to be in the best interest of the County.

4.4 TERMINATION.

Jefferson County reserves the right to terminate the contract for default if the Bidder breached any of the terms therein, including warranties of Bidder or if the Bidder becomes insolvent or commits acts of bankruptcy. Such right of termination is in addition to and not in lieu of any other remedies which Jefferson County may have in law or equity. Default may be construed as, but not limited to, failure to deliver the proper goods and/or service within the proper amount of time, and/or to properly perform any and all services required to Jefferson County's satisfaction and/or to meet all other obligations and requirements. Contracts may be terminated without cause upon thirty (30) days' written notice to either party unless otherwise specified. Jefferson County reserves the right to award canceled contract to the next lowest Bidder. Bidder, in submitting this bid, agrees that Jefferson County shall not be liable to prosecution for damages in the event that the County declares the Bidder in default.

4.5 CONFLICT OF INTEREST.

Employees of the County are not permitted to maintain financial interest in, or receive payment, directly or indirectly, borrow from, lend to, invest in, or engage in any substantial financial transaction with any individual, organization, supplier, or subcontractor who does business with the County without disclosure. When conflict of interest is discovered, it shall be grounds for termination of contract.

4.6 INTEREST BY PUBLIC OFFICIALS.

No public official shall have interest in this contract, in accordance with Texas Local Government Code.

4.7 PRE-AWARD/CONTRACT CONTACT BETWEEN COUNTY AND VENDORS.

The Jefferson County Purchasing Department may initiate discussions with selected vendors; however, discussions may not be initiated by vendors.

The Jefferson County Purchasing Department expects to conduct discussions with vendor's representatives authorized to contractually obligate the vendor with an offer. **Vendors shall not contact any Jefferson County personnel during the IFB process without the express permission from the Jefferson County Purchasing Agent. The Purchasing Agent will disqualify any vendor who has made site visits, contacted Jefferson County personnel, or distributed any literature without authorization from the Jefferson County Purchasing Department.**

All correspondence relating to this IFB, from advertisement to award shall be sent to the Jefferson County Purchasing Department. All presentations and/or meetings between Jefferson County and the vendor relating to this IFB shall be coordinated by the Jefferson County Purchasing Department.

Selected vendors may be expected to make a presentation/product demonstration to an Evaluation Committee. Proposals, vendor presentations, and product/service evaluations may develop into negotiating sessions with the vendor(s) as selected by the Evaluation Committee. Jefferson County expects to conduct negotiations with vendor representatives authorized to contractually obligate the vendor with an offer. If vendor is unable to agree to contract terms and conditions, Jefferson County reserves the right to terminate contract negotiations with that vendor and initiate negotiations with another vendor. In addition to a presentation, visits by the Evaluation Committee to representative vendor client sites may be conducted where the proposed solution can be demonstrated in a production environment.

4.8 INJURIES OR DAMAGES RESULTING FROM NEGLIGENCE.

Successful vendor shall defend, indemnify and save harmless Jefferson County and all its officers, agents and employees from all suits, actions, or other claims of any character, name and description brought for or on account of any injuries or damages received or sustained by any person, persons, or property on account of any negligent act or fault of the successful vendor, or of any agent, employee, subcontractor or supplier in the execution of, or performance under, any contract which may result from bid award. Successful vendor shall pay any judgment with cost which may be obtained against Jefferson County growing out of such injury or damages.

4.9 WARRANTY.

The successful vendor shall warrant that all materials utilized in the performance of this contract shall conform to the proposed specifications and/or all warranties as stated in the Uniform Commercial Code and be free from all defects in material, workmanship and title.

4.10 UNIFORM COMMERCIAL CODE.

The successful vendor and Jefferson County agree that both parties have all rights, duties, and remedies available as stated in the Uniform Commercial Code.

4.11 VENUE.

This agreement will be governed and construed according to the laws of the State of Texas. This agreement is performable in the County of Jefferson, Texas.

4.12 SALE, ASSIGNMENT, OR TRANSFER OF CONTRACT.

The successful vendor shall not sell, assign, transfer or convey this contract, in whole or in part, without the prior written consent of Jefferson County.

4.13 SILENCE OF SPECIFICATIONS.

The apparent silence of these specifications as to any detailed description concerning any point, shall be regarded as meaning that only the best commercial practices are to prevail. All interpretations of these specifications shall be made on the basis of this statement.

5. REJECTION OR WITHDRAWAL.

Submission of additional terms, conditions or agreements with the bid document are grounds for deeming a bid non-responsive and may result in bid rejection. Jefferson County reserves the right to reject any and all bids and to waive any informalities and minor irregularities or defects in bids. Bids may be withdrawn in person by a bidder or authorized representative, provided their identity is made known and a receipt is signed for the bid, but only if the withdrawal is made prior to the time set for receipt of bids. Bids are an irrevocable offer and may not be withdrawn within **90** days after opening date.

6. EMERGENCY/DECLARED DISASTER REQUIREMENTS.

In the event of an emergency or if Jefferson County is declared a disaster area, by the County, State, or Federal Government, this Acceptance of Offer may be subjected to unusual usage. Contractor shall service the county during such an emergency or declared disaster under the same terms and conditions that apply during non-emergency/disaster conditions. The pricing as specified in this Acceptance of Offer shall apply to serving the County's needs regardless of the circumstances. If Contractor is unable to supply the services under the terms of the Acceptance of Offer, then Contractor shall provide proof of such disruption and a copy of the invoice from Contractor's supplier(s).

Additional profit margin as a result of supplying services during an emergency or declared disaster shall not be permitted. In the event that additional equipment, supplies, and materials are required during the declared disaster, additional shipping, handling and drayage fees may apply.

7. AWARD.

The bid will be awarded to the responsible, responsive bidder(s) whose bid, conforming to the solicitation, will be most advantageous to Jefferson County – price and other factors considered. Unless otherwise specified in this IFB, Jefferson County reserves the right to accept a bid in whole or in part, and to award by item or by group, whichever is deemed to be in the best interest of Jefferson County. Any bidder who is in default to Jefferson County at the time of submittal of the bid shall have that bid rejected.

Jefferson County reserves the right to clarify any contractual terms with the concurrence of the Contractor; however, any substantial non-conformity in the offer, as determined by Jefferson County, shall be deemed non-responsive and the offer rejected.

In evaluating bids, Jefferson County shall consider the qualifications of the bidders, and, where applicable, operating costs, delivery time, maintenance requirements, performance data, and guarantees of materials and equipment.

In addition, Jefferson County may conduct such investigation as it deems necessary to assist in the evaluation of a bid and to establish the responsibility, qualifications, and financial ability of the bidders to fulfill the contract.

Jefferson County reserves the right to award this contract on the basis of **lowest and best bid** in accordance with the laws of the State of Texas, to waive any formality or irregularity, to make awards to more than one offeror, and/or to reject any or all bids. In the event the lowest dollar offeror meeting specifications is not a awarded a contract, Offeror may appear before the Commissioners' Court and present evidence concerning Offeror responsibility after officially notifying the Office of the Purchasing Agent of Offeror's intent to appear.

8. CONTRACT.

A response to an IFB is an offer to contract with Jefferson County based upon the terms, conditions, and specifications contained in the IFB. Bids do not become contracts unless and until they are executed by Jefferson County, eliminating a formal signing of a separate contract. For that reason, all of the terms and conditions of the contract are contained in the IFB, unless any of the terms and conditions is modified by an IFB Amendment, a Contract Amendment, or by mutually agreed terms and conditions in the contract documents.

9. WAIVER OF SUBROGATION.

Bidder and bidder's insurance carrier waive any and all rights whatsoever with regard to subrogation against Jefferson County as an indirect party to any suit arising out of personal or property damages resulting from bidder's performance under this agreement.

10. FISCAL FUNDING.

A multi-year contract (if requested by the specifications) continuing as a result of an extension option must include fiscal funding out. If, for any reason, funds are not appropriated to continue the contract, said contract shall become null and void.

11. BID RESULTS.

Bid results are not provided in response to telephone inquiries. A preliminary tabulation of bids received will be posted on the Purchasing web page at https://www.co.jefferson.tx.us/Purchasing/ as soon as possible following bid opening. A final tabulation will be posted following bid award, and will also be available for review in the Purchasing Department.

12. CHANGES AND ADDENDA TO BID DOCUMENTS.

Each change or addendum issued in relation to this IFB document will be on file in the Office of the Purchasing Agent, and will be posted on the Purchasing web site as soon as possible. It shall be the bidder's responsibility to make inquiry as to change or addenda issued, and to monitor the web site. All such changes or addenda shall become part of the contract and all bidders shall be bound by such addenda. Information on all changes or addenda issued will be available at the Office of the County Purchasing Agent.

13. SPECIFICATIONS.

Unless otherwise stated by the bidder, the bid will be considered as being in accordance with Jefferson County's applicable standard specifications, and any special specifications outlined in the bid document. References to a particular trade name, manufacturer's catalogue, or model number are made for descriptive purposes to guide the bidder in interpreting the requirements of Jefferson County, and should not be construed as excluding bids on other types of materials, equipment, and supplies. However, the bidder, if awarded a contract, will be required to furnish the particular item referred to in the specifications or description unless departure or substitution is clearly noted and described in the bid.

Jefferson County reserves the right to determine if equipment/ product being bid is an acceptable alternate. All goods shall be new unless otherwise so stated in the bid. Any unsolicited alternate bid, or any changes, insertions, or omissions to the terms and conditions, specifications, or any other requirements of the bid, may be considered non-responsive.

14. DELIVERY.

Bids shall include all charges for delivery, packing, crating, containers, etc. Unless otherwise stated by the bidder (in writing on the included Bid Form), prices bid will be considered as being based on F.O.B. destination/delivered freight included.

15. INTERPRETATION OF BID AN/OR CONTRACT DOCUMENTS.

All inquiries shall be made within a reasonable time prior to the date and time fixed for the bid opening, in order that a written response in the form of an addendum, if required, can be processed before the bids are opened. Inquiries received that are not made in a timely fashion may or may not be considered.

16. CURRENCY.

Prices calculated by the bidder shall be stated in U.S. dollars.

17. PRICING.

Prices shall be stated in units of quantity specified in the bid documents. In case of discrepancy in computing the amount of the bid, the unit price shall govern.

18. NOTICE TO PROCEED/PURCHASE ORDER.

The successful bidder may not commence work under this contract until authorized to do so by the Purchasing Agent.

19. CERTIFICATION.

By signing the offer section of the Offer and Acceptance page, Bidder certifies:

- The submission of the offer did not involve collusion or other anti-competitive practices.
- The Bidder has not given, offered to give, nor intends to give at any time hereafter, any economic opportunity, future employment, gift, loan, gratuity, special discount, trip, favor, or service to any public servant in connection with the submitted offer.
- The Bidder hereby certifies that the individual signing the bid is an authorized agent for the Bidder and has the authority to bind the Bidder to the contract.

20. DEFINITIONS.

"County" – Jefferson County, Texas.
"Contractor" – The Bidder whose proposal is accepted by Jefferson County.

21. DISADVANTAGED BUSINESS ENTERPRISES (DBEs), MINORITY/WOMEN BUSINESS ENTERPRISES (M/WBEs), AND HISTORICALLY UNDERUTILIZED BUSINESSES (HUBs)

It is the desire of Jefferson County to increase the participation of Disadvantaged (DBE), Minority (MBE), Women-Owned (WBE), and Historically Underutilized (HUB) Business Enterprises in its contracting and procurement programs. While the County does not have any preference or set aside programs in place, it is committed to a policy of equitable participation for these firms.

Affirmative Steps pursuant to 2 CFR §200.321

Good faith efforts will be taken to assure small and minority firms are used whenever possible, consistent with 49 CFR part 26. These steps and efforts include, but not limited to:

- Including qualified small business and minority forms on solicitation lists
- Assure that small businesses and minority firms are solicited whenever they are potential sources. Consultation with Airports Division, Office of Civil Rights and or State transportation offices is used.

- When economically feasible, the total requirements will be divided into tasks to permit maximum small business and DBE firm participation.
- Encourage consultants to subcontract portions of the work, even when they might otherwise perform the work with their own forces.

For the purposes of this IFB, respondents are to provide the following information:

- Certification of any DBEs on this project.
- Percentage of project DBEs will work on, if part of a team.
- The Bidder must clearly state that they have no DBEs on their team, if applicable. If Bidder has minority businesses as part of a team or is a minority business registered with the State of Texas but is not certified as a DBE, that information must also be clearly stated in bid response.

SECTION 2: FEDERAL MANDATED CONTRACT PROVISIONS

Some or all of the provisions in this section will be incorporated into a professional service agreement as a result of this solicitation.

BREACH OF CONTRACT TERMS/REMEDIES

Source: 2 CFR § 200 Appendix II (A)

Applicability: This provision requires Jefferson County, as the Airport Sponsor, to incorporate administrative, contractual, or legal remedies if contractor/consultant violate or breach contract terms. The sponsor must also include appropriate penalties and sanctions. Language acceptable to meet the intent of this requirement will be included in contractual documents.

This requirement applies to all FEMA grant and cooperative agreement programs

Contract Types: This provision is required for all contracts that exceed the simplified acquisition threshold as stated in 2 CFR § 200, Appendix II (A). This threshold is occasionally adjusted for inflation and is now equal to $150,000.

TERMINATION OF CONTRACT (FOR CAUSE AND CONVENIENCE)

Source: 2 CFR § 200 Appendix II (B)

FAA Advisory Circular 150/5370-10, Section 80-09

Applicability: This provision requires Jefferson County, as the Airport Sponsor, to incorporate in all contracts over $10,000, a provision that addresses termination for cause and termination for convenience, by the sponsor. The contractual provision must address the manner by which the sponsor's contract will be affected and the basis for settlement. Language acceptable to meet the intent of this requirement will be included in contractual documents.

This requirement applies to all FEMA grant and cooperative agreement programs.

Contract Types: This provision is required for all contracts that exceed $10,000.

EQUAL EMPLOYMENT OPPORTUNITY

Source: 2 CFR § 200 Appendix II (C) 41 CFR § 60-1.4

Executive Order 11246 41 CFR § 60-4.3

Applicability: The purpose of this provision is to provide equal opportunity for all persons, without regard to race, color, religion, sex, or national origin who are employed or seeking employment with contractors performing under a federally assisted construction contract. There are two provisions, a construction clause and a specification clause.

The equal opportunity contract clause must be included in any contract or subcontract when the amount exceeds $10,000. Once the equal opportunity clause is determined to be applicable, the contract or subcontract must include the clause for the remainder of the year, regardless of the amount of the contract.

This requirement applies to all FEMA grant and cooperative agreement programs.

Contract Types: This provision is required for all contracts that exceed $10,000.

Use of Provision: 41 CFR 60-1.4 provides the mandatory **contract** language. 41 CFR 60-4.3 provides the mandatory **specification** language. The sponsor will incorporate these clauses without modification.

Note: Any contracts resulting from this IFB will have the requisite language as set forth in 2 CFR 200 App II, 41 CFR 60-1.4, 41 CFR 60-4.3, and Executive Order 11246.

DAVIS-BACON REQUIREMENTS

Source: 2 CFR § 200 Appendix II (D)

29 CFR Part 5

Applicability: The Davis-Bacon Act ensures that laborers and mechanics employed under the contract receive pay no less than the locally prevailing wages and fringe benefits as determined by the Department of Labor.

For Professional Services: The emergence of different project delivery methods has created situations where Professional Service Agreements (PSAs) includes tasks that meet the definition of construction, alteration, or repair as defined in 29 CFR Part 5. If such tasks result in work that qualifies as construction, alteration, or repair and it exceeds $2,000, the PSA must incorporate this clause.

Use of Provision: 29 CFR 5 establishes the specific language the sponsor must use without modification. A/E firms that employ laborers and mechanics on a task that meets the definition of construction, alteration, or repair are acting as a contractor. The sponsor may not substitute the term "Contractor" for "Consultant" in such instances.

COPELAND ANTI-KICKBACK

Source: 2 CFR § 200 Appendix II (D)

29 CFR Part 3 & Part 5

Applicability: The Copeland Act (18 USC 874 and 40 USC 3145) makes it unlawful to induce by force, intimidation, threat of dismissal from employment, or by any other manner, any person employed in the construction or repair of public buildings or public works, financed in whole or in part by the United States, to give up any part of the compensation to which that person is entitled under a contract of employment. The Copeland Act also requires each contractor and subcontractor to furnish weekly a statement of compliance with respect to the wages paid each employee during the preceding week.

It DOES NOT apply to the FEMA Public Assistance Program.

For Professional Services: The emergence of different project delivery methods has created situations where Professional Service Agreements (PSAs) includes tasks that meet the definition of construction, alteration, or repair as defined in 29 CFR Part 5. If such tasks result in work that qualifies as construction, alteration, or repair and it exceeds $2,000, the PSA must incorporate the Copeland Anti-kickback provision.

Use of Provision: 29 CFR 5 establishes the specific language the sponsor must use without modification. A/E firms that employ laborers and mechanics on a task that meets the definition of construction, alteration, or repair are acting as a contractor. The sponsor may not substitute the term "Contractor" for "Consultant" in such instances.

CONTRACT WORK HOURS AND SAFETY STANDARDS ACT REQUIREMENTS

Source: 2 CFR § 200 Appendix II (E) 29 CFR Part 5

40 U.S.C. § 3701-3708

Applicability: Contract Workhours and Safety Standards Act Requirements (CWHSSA) requires contractors and subcontractors on covered contracts to pay laborers and mechanics employed in the performance of the contracts one and one-half times their basic rate of pay for all hours worked over 40 in a workweek and prohibits unsanitary, hazardous, or dangerous working conditions on federally assisted projects. The Wage and Hour division (WHD) within the U.S. Department of Labor (DOL) enforces the compensation requirements

of this Act, while DOL's Occupational Safety and Health Administration (OSHA) enforces the safety and health requirements.

Jefferson County urges all contractors, regardless of funding sources for projects, to follow all applicable Federal and State labor laws.

For Professional Services: This provision applies to professional service agreements that exceed $100,000 and employs laborers, mechanics, watchmen, and guards This includes members of survey crews and exploratory drilling operations.

Use of Provision: The following text will be included in applicable contracts without modification:

1. *Overtime requirements*. No contractor or subcontractor contracting for any part of the contract work which may require or involve the employment of laborers or mechanics shall require or permit any such laborer or mechanic in any workweek in which he or she is employed on such work to work in excess of forty hours in such workweek unless such laborer or mechanic receives compensation at a rate not less than one and one-half times the basic rate of pay for all hours worked in excess of forty hours in such workweek.

2. *Violation; liability for unpaid wages; liquidated damages.* In the event of any violation of the clause set forth in paragraph (1) of this clause, the Contractor and any subcontractor responsible therefor shall be liable for the unpaid wages. In addition, such contractor and subcontractor shall be liable to the United States (in the case of work done under contract for the District of Columbia or a territory, to such District or to such territory), for liquidated damages. Such liquidated damages shall be computed with respect to each individual laborer or mechanic, including watchmen and guards, employed in violation of the clause set forth in paragraph (1) of this section, **in the sum of $300 for each calendar day** on which such individual was required or permitted to work in excess of the standard workweek of forty hours without payment of the overtime wages required by the clause set forth in paragraph (1) of this clause.

3. *Withholding for unpaid wages and liquidated damages*. Jefferson County shall upon its own action or upon written request of an authorized representative of the Department of Labor withhold or cause to be withheld, from any moneys payable on account of work performed by the contractor or subcontractor under any such contract or any other Federal contract with the same prime contractor, or any other federally-assisted contract subject to the Contract Work Hours and Safety Standards Act, which is held by the same prime contractor, such sums as may be determined to be necessary to satisfy any liabilities of such contractor or subcontractor for unpaid wages and liquidated damages as provided in the clause set forth in paragraph (2) of this clause.

4. Subcontracts. The contractor or subcontractor shall insert in any subcontracts the clauses set forth in paragraph (1) through (4) of this section and also a clause requiring the subcontractors to include these clauses in any lower tier subcontracts. The prime contractor shall be responsible for compliance by any subcontractor or lower tier subcontractor with the clauses set forth in paragraphs (1) through (4) of this clause.

RIGHTS TO INVENTIONS

Source: 2 CFR § 200 Appendix II (F)

37 CFR § 401

Applicability: This provision applies to all contracts and subcontracts with small business forms or nonprofit organizations that include performance of *experimental, developmental, or research work*. This clause is not applicable to construction, equipment, or professional service contracts unless the contract includes *experimental, developmental, or research work*. This requirement applies to "funding agreements," but it DOES NOT apply to the Public Assistance, Hazard Mitigation Grant Program, Fire Management Assistance Grant Program, Crisis Counseling Assistance and Training Grant Program, Disaster Case Management Grant

Program, and Federal Assistance to Individuals and Households – Other Needs Assistance Grant Program, as FEMA awards under these programs do not meet the definition of "funding agreement."

Use of Provision: When applicable, the sponsor's language in the contract must fully satisfy the requirements of Appendix II to 2 CFR part 200.

CLEAN AIR AND WATER POLLUTION CONTROL

Source: 2 CFR § 200 Appendix II (G)

29 CFR Part 5

Applicability: This provision is required on all contracts and lower tier contracts that exceed $150,000.

Use of Provision: The following language will be included in applicable contracts:

1. Contractor agrees to comply with all applicable standards, orders, and regulations pursuant to the Clean Air Act (42 U.S.C. § 7401-7671q) and the Federal Water Pollution Control Act, as amended (33 U.S.C. § 1251-13870). The contractor agrees to report any violation to the owner immediately upon discovery. The owner assumes responsibility for notifying the EPA and the FAA.

DEBARMENT AND SUSPENSION

Source: 2 CFR Part 180 (Subpart C) 2 CFR Part 3000

2 CFR Part 1200 DOT Order 4200.5

Applicability: Required in all FEMA grant and cooperative agreement programs, regardless of amount. This requirement applies to covered transactions as defined in 2 CFR part 180. AIP funded contracts are non-procurement transactions as defined by §180.970. Covered transactions include any AIP-funded contract, regardless of tier, that is awarded by a contractor, subcontractor, supplier, consultant, or its agents or representative in any transaction, if the amount of the contract is expected to equal or exceed $25,000. Jefferson County must verify that the firm or individual that is entering into a contract with is not presently suspended, excluded, or debarred by any Federal department or agency from participating in federally assisted projects. This is accomplished by:

1. Checking SAM.gov to verify the firm's or individual's status;
2. Collecting a certification from the firm or individual that is not suspended, debarred, or excluded; and
3. Incorporating a clause into the contract that requires lower tier contracts to verify that no suspended, debarred, or excluded firm or individual is included in the project.

See Paragraph above for more information on SAM.gov.

Use of Provision: When applicable, the sponsor's language in the contract must fully satisfy the requirements of Appendix II to 2 CFR part 200.

LOBBYING AND INFLUENCING FEDERAL EMPLOYEES

Source: 2 CFR § 200 Appendix II (J) 31 USC § 1352 – Byrd Anti-Lobbying Amendment

49 CFR Part 20, Appendix A 44 CFR Part 18

Applicability: This requirement applies to all FEMA grant and cooperative agreement programs. Consultants and contractors that apply or bid an award of $100,000 or more must certify that it will not and has not used Federal appropriated funds to pay any person or organization for influencing or attempting to influence an officer or employee of any agency, a member of Congress, officer or employee of Congress, or an employee of a member of Congress in connection with obtaining any Federal contract, grant, or another award covered

by 31 USC 1352. Each tier must also disclose any lobbying with non-Federal funds that takes place in connection with obtaining any Federal award.

Use of Provision: When applicable, the sponsor's language in the contract must fully satisfy the requirements of Appendix II to 2 CFR part 200 Appendix (J) and 31 USC 1352.

If applicable, contractors ***must sign and submit*** to Jefferson County the "**Certification Regarding Lobbying**" Form included in this bid specification.

PROCUREMENT OF RECOVERED MATERIALS

Source: 2 CFR § 200 Appendix II (J) Solid Waste Disposal Act

40 CFR Part 247 2 CFR § 200.322

Applicability: Sponsors of AIP funded development and equipment projects must comply with Section 6002 of the Solid Waste Disposal Act, as amended by the Resource Conservation and Recovery Act. Section 6002 emphasizes maximizing energy and resource recovery through use of affirmative procurement actions for recovered materials identified in the EPA guidelines. When acquiring items designated in the guidelines, the sponsor must procure items that contain the highest percentage of recovered materials practicable, consistent with maintaining a satisfactory level of competition.

This requirement applies to:

- All contracts awarded by a non-Federal entity under FEMA grant and cooperative agreement programs.
- All construction and equipment projects.
- Any contract, professional and property acquisition, that includes procurement of a product that exceeds $10,000.

Information about this requirement, along with the list of EPA designated items, is available at EPA's Comprehensive Procurement Guidelines website:

https://www.epa.gov/smm/comprehensiveprocurement-guideline-cpg-program.

The Contractor also agrees to comply with all other applicable requirements of Section 6002 of the Solid Waste Disposal Act." The Uniform Rules authorize FEMA to require additional provisions for non-Federal entity contracts.

Use of Provision: When applicable, the sponsor's language in the contract must fully satisfy the requirements of Appendix II to 2 CFR part 200.

ACCESS TO RECORDS AND REPORTS

Source: 2 CFR § 200.333 FAA Order 5100.38

2 CFR § 200.336

Applicability: 2 CFR § 200.333 requires a sponsor to retain records pertinent to a federal award for a period of three years from submission of final closure documents. 2 CFR § 200.336 establishes that sponsors must provide Federal entities the right to access records pertinent to the Federal award. FAA policy extends these requirements to the sponsor's contracts and subcontracts of AIP funded projects.

Use of Provision: When applicable, the sponsor's language in the contract must fully satisfy the requirements of Appendix II to 2 CFR part 200. The following will be in applicable contracts:

1. The contractor must maintain an acceptable cost accounting system. The Contractor agrees to provide the local/state/federal entity providing funding for this project, the FEMA Administrator, the Comptroller

General of the United States, or any of their authorized representatives access to any books, documents, papers, and records of the Contractor which are directly pertinent to this contract for the purposes of making audits, examinations, excerpts, and transcriptions.

2. The contractor agrees to maintain all books, records and reports required under this contract for a period of not less than three years after final payment is made and all pending matters have been resolved.
3. The Contractor agrees to permit any of the foregoing parties to reproduce by any means whatsoever or to copy excerpts and transcriptions as reasonably needed.
4. The Contractor agrees to provide the FEMA Administrator or their representatives access to construction or other work sites pertaining to the work being completed under the contract.
5. In compliance with the Disaster Recovery Act of 2018, the County and the Contractor acknowledge and agree that no language in this contract is intended to prohibit audits or internal reviews by the FEMA Administrator or the Comptroller General of the United States.

AFFIRMATIVE ACTION REQUIREMENT

Source: 41 CFR Part 60-4 FAA Order 5100.38

Executive Order 11246

Applicability: Sponsors are required to set goals for minority participation in AIP funded projects exceeding $10,000. The goals for minority participation derive from Economic Area (EA) and Standard Metropolitan Statistical Area (SMSA) as established in Volume 45 of the Federal Register dated 10/03/80. Page 65984 contains a table of all EAs and SMSAs and the associated minority participation goals.

Executive Order 11246 has set a goal of 6.9% nationally for female participation for all construction projects. This value remains constant for all counties and states.

Contract Types:

- **Construction:** The sponsor must incorporate this notice in all solicitations for bids or requests for proposals for AIP funded construction work contracts and subcontracts that exceed $10,000.
- **Equipment:** The sponsor must incorporate this notice in all solicitations for equipment project exceeding $10,000 that involves installation of equipment onsite (e.g. electrical vault equipment, generators). This provision does not apply to equipment acquisition projects where the manufacturer of the equipment takes place offsite at a manufacturer's plant (e.g. firefighting and vehicles).
- **Professional Services:** The sponsor must incorporate this notice in any professional service agreement if the agreement includes tasks that meet the definition of construction work, as defined by the DOL, and exceeds $10,000.

Use of Provision: When applicable, the sponsor's language in the contract must fully satisfy the requirements of 41 CFR Part 60-4. The following will be in applicable contracts:

Solicitation Clause*:*

NOTICE OF REQUIREMENT FOR AFFIRMATIVE ACTION TO ENSURE EQUAL EMPLOYMENT OPPORTUNITY

1. The Offeror's or Bidder's attention is called to the "Equal Opportunity Clause" and the "Standard Federal Equal Employment Opportunity Construction Contract Specifications" set forth herein.
2. The goals and timetables for minority and female participation, expressed in percentage terms for the contractor's aggregate workforce in each trade on all construction work in the covered area, are as follows:

a. Goals for minority participation for each trade: 10.01 %

b. Goals for female participation in each trade: 10.01 %

These goals are applicable to all of the contractor's construction work, whether or not it is federal or federally assisted, performed in the covered area. If the contractor performs construction work in a geographical area located outside of the covered area, it shall apply the goals established for such geographical area where the work is actually performed. With regard to this second area, the contractor also is subject to the goals for both its federally involved and non-federally involved construction.

The contractor's compliance with the Executive Order and the regulations in 41 CFR Part 60-4 shall be based on its implementation of the Equal Opportunity Clause, specific affirmative action obligations required by the specifications set forth in 41 CFR Part 60-4.3(a) and its efforts to meet the goals. The hours of minority and female employment and training must be substantially uniform throughout the length of the contract, and in each trade, and the contractor shall make a good faith effort to employ minorities and women evenly on each of its projects. The transfer of minority or female employees or trainees from contractor to contractor or from project to project for the sole purpose of meeting the contractor's goals shall be a violation of the contract, the Executive Order and the regulations in 41 CFR Part 60-4. Compliance with these goals will be measured against the total work hours performed.

The contractor shall provide written notification to the Director of the Office of Federal Contract Compliance Programs (OFCCP) within 10 working days of award of any construction subcontract in excess of $10,000 at any tier for construction work under the contract resulting from this solicitation. The notification shall list the name, address, and telephone number of the subcontractor; employer identification number of the subcontractor; estimated dollar amount of these subcontract; estimated starting and completion dates of the subcontract; and the geographical area in which the subcontract is to be performed.

As used in this notice and in the contract resulting from this solicitation, the covered area is Texas, Jefferson County, Beaumont.

BUY AMERICAN PREFERENCES

Source: 49 USC § 50101

Applicability: the buy American preference requirement in 49 USC § 50101 requires that all still in manufactured goods used on AIP projects be produced in the United States. This statute gives the FAA the ability to issue a waiver to a sponsor to use non-domestic material on an AIP funded project subject to meeting certain conditions a sponsor may request that the FAA issue a waiver from the by American preference requirements if the FA finds that:

1. Applying the provision is not in the public interest;
2. The steel or manufactured goods are not available in sufficient quantity or quality in the United States;
3. The cost of components in subcomponents produced in the United States is more than 60% of the total components of a facility or equipment, and final assembly has taken place in the United States. Items that have an FAA standard specification item number, such as specific airport lighting equipment, are considered the equipment.
4. Applying this provision would increase the cost of the overall project by more than 25%.

For construction and equipment procurement projects, language, forms, and references to 49 USC § 50101 will be included in the solicitation.

Professional Service Agreements typically do not result in a deliverable that meets the definition of a manufactured product. If a PSA includes providing a manufactured good as a deliverable under the contract, the sponsor must include the Buy American Preference provision in the agreement.

Use of Provision: When applicable, the sponsor's language in the contract must fully satisfy the requirements of 49 USC § 50101.

CIVIL RIGHTS

Source: 49 USC § 47123 Title VI of the Civil Rights Act of 1964

FAA Order 1400.11 US DOT Order 1050.2

Applicability: Title VI of the Civil Rights Act of 1964, as amended, Title VI, prohibits discrimination on the grounds of race, color, or national origin under any program or activity receiving Federal financial assistance. Sponsors must include appropriate clauses from the Standard DOT Title VI Assurances in all contracts and solicitations.

The text of each individual clause comes from the U.S. DOT Order 1050.2 Standard Title VI Assurances and Nondiscrimination Provisions, effective 04/24/2013. These assurances require the sponsor insert the appropriate clauses in the form provided by the DOT. Where the clause refers to the applicable activity, project, or program, it means the AIP project.

TITLE VI SOLICITATION NOTICE

Jefferson County, in accordance with the provisions of Title VI of the Civil Rights Act of 1964 (78 Stat. 252, 42 USC § 2000d to 2000d-4) and the Regulations, hereby notifies all bidders or offerors that it will affirmatively ensure that any contract entered into pursuant to this advertisement, Disadvantaged Business Enterprises will be afforded full and fair opportunity to submit bids in response to this invitation and will not be discriminated against on the grounds of race, color, or national origin in consideration for an award.

Title VI List of Pertinent Nondiscrimination Acts and Authorities

During the performance of any contract as a result of this bid, the Contractor, for itself, its assignees, and successors in interest, hereinafter referred to as the Contractor, agrees to comply with the following non-discrimination statutes and authorities, including but not limited to:

- Title VI of the Civil Rights Act of 1964
- 49 CFR part 21
- The Uniform Relocation Assistance and Real Property Acquisition Policies Act of 1970
- Section 504 of the Rehabilitation Act of 1973
- The Age Discrimination Act of 1975
- Airport and Airway Improvement Act of 1982
- The Civil Rights Restoration Act of 1987
- Titles II and III of the Americans with Disabilities Act of 1990
- The Federal Aviation Administration's Nondiscrimination Statute
- Executive Order 12898, Federal Actions to Address Environmental Justice in Minority Populations and Low-Income Populations
- Executive Order 13166, Improving Access to Services for Persons with Limited English Proficiency
- Title IX of the Education Amendments of 1972

DISADVANTAGED BUSINESS ENTERPRISE

Source: 49 CFR part 26

Applicability: A sponsor that anticipates awarding $250,000 or more in AIP funding prime contracts in a federal fiscal year must have an approved Disadvantaged Business Enterprise (DBE) program on file with the FAA Office of Civil Rights (§26.21). The approved DBE program will identify a 3-year overall program goal that the sponsor bases on the availability of ready, willing, and able DBEs relative to all businesses ready, willing, and able to participate on the project. (§26.45).

Sponsors with a DBE program on file with the FAA must include the three following provisions, if applicable:

- Clause in all solicitations for proposals for which a contract goal has been established;
- Clause in each prime contract, and;
- Clause in solicitations that are obtaining DBE participation through race/gender neutral means.

As a condition of bid responsiveness, the Bidder or Offeror must submit the following information with its proposal on the forms provided herein:

1. Names and addresses of the DBE firms that will participate in the contract;
2. A description of the work each DBE firm will perform;
3. Percentage/dollar amount of the participation of each DBE firm listed under 1.
4. Written statement from Bidder or Offeror that attests their commitment to use the DBE firm(s) listed under (1) to meet the Owner's project goal; and
5. If Bidder or Offeror cannot meet the advertised project DBE goal, evidence of good faith efforts undertaken by the Bidder or Offeror as described in 49 CFR part 26 Appendix A

The requirements of 49 CFR part 26 apply to this contract. It is the policy of Jefferson County to practice nondiscrimination based on race, color, sex, or national origin in the award or performance of this contract. Jefferson County encourages participation by all firms qualifying under this solicitation regardless of business size or ownership.

DBE CONTRACT ASSURANCES

Contracts as a result of this bid will include contract assurances per §26.13, if applicable:

The contractor or subcontractor shall not discriminate on the basis of race, color, national origin, or sex in the performance of this contract. The contractor shall carry out applicable requirements of 49 CFR part 26 and the award and administration of Department of Transportation-assisted contracts. Failure by contractor to carry out these requirements is a material breach of this contract which may result in the termination of this contract or such other remedy as the owner deems appropriate, which may include but is not limited to:

1. Withholding monthly progress payments;
2. Accessing sanctions;
3. Liquidated damages; and/or
4. Disqualifying the Contractor from future bidding as non-responsible.

Prompt Payment (§26.29) – **The prime contractor agrees to pay each subcontractor under this prime contract for satisfactory performance of its contract no later than 30 days from the receipt of each payment the prime contractor receives from Jefferson County. The prime contractor agrees further to return payments to each subcontractor within 30 days after the subcontractor's work is satisfactorily completed. Any delay or postponement of payment from the above referenced time frame may occur only for good cause following written approval of Jefferson County. This clause applies to both DBE and non-DBE subcontractors.**

DISTRACTED DRIVING

Source: Executive Order 13513 2 CFR §200.67

DOT Order 3902.10

Applicability: The FAA encourages recipients of federal grant funds to adopt and enforce safety policies that decrease crashes by distracted drivers, including policies to ban text messaging while driving when performing work related to a grant or subgrant.

Use of Provision: The following clause will be included in all Federally-assisted contracts regardless of amount:

In accordance with executive order 13513, federal leadership on reducing text messaging while driving, Andy OT order 3902.10, text messaging while driving, the FAA encourages recipients of Federal grant funds to adopt and enforce safety policies that decrease crashes by distracted drivers including policies to ban text messaging while driving when performing work related to a grant or subgrant.

In support of this initiative, Jefferson County encourages the contractor to promote policies and initiatives for its employees and other work personnel that decrease crashes by distracted drivers, including policies that ban text messaging while driving motor vehicles Papa forming work activities associated with the project. The contractor must include the substance of this clause and other sub tier contracts exceeding $3,500 that involve driving a motor vehicle and performance of work activities associated with the project.

COMPLIANCE WITH FEDERAL LAW, REGULATIONS, AND EXECUTIVE ORDERS

The recipient and its contractors are required to comply with all Federal laws, regulations, and executive orders.

Applicability: FEMA recommends that all non-Federal entities place into their contracts an acknowledgement that FEMA financial assistance will be used to fund the contract along with the requirement that the contractor will comply with all applicable Federal law, regulations, executive orders, and FEMA policies, procedures, and directives.

"*This is an acknowledgement that FEMA financial assistance will be used to fund all or a portion of the contract. The contractor will comply with all applicable Federal law, regulations, executive orders, FEMA policies, procedures, and directives."*

NO OBLIGATION BY FEDERAL GOVERNMENTS

The FAA and or FEMA is not a party to any transaction between the recipient and its contractor. The FAA and or FEMA is not subject to any obligations or liable to any party for any matter relating to the contract.

Applicability: FEMA recommends that the non-Federal entity include a provision in its contract that states that the Federal Government is not a party to the contract and is not subject to any obligations or liabilities to the non-Federal entity, contractor, or any other party pertaining to any matter resulting from the contract.

"The Federal Government is not a party to this contract and is not subject to any obligations or liabilities to the non-Federal entity, contractor, or any other party pertaining to any matter resulting from the contract."

PROGRAM FRAUD AND FALSE OR FRAUDULENT STATEMENTS OR RELATED ACTS

Recipients must comply with the requirements of The False Claims Act (31 U.S.C. §§ 3729-3733) which prohibits the submission of false or fraudulent claims for payment to the federal government. See DHS Standard Terms and Conditions: Version 8.1 (2018); and 31 U.S.C. §§ 3801-3812, which details the administrative remedies for false claims and statements made. The non-Federal entity must include a provision in its contract that the contractor acknowledges that 31 U.S.C. Chap. 38 (Administrative Remedies for False Claims and Statements) applies to its actions pertaining to the contract.

FEMA recommends that the non-Federal entity include a provision in its contract that the contractor acknowledges that 31 U.S.C. Chap. 38 (Administrative Remedies for False Claims and Statements) applies to its actions pertaining to the contract.

"The Contractor acknowledges that 31 U.S.C. Chap. 38 (Administrative Remedies for False Claims and Statements) applies to the Contractor's actions pertaining to this contract."

BYRD ANTI-LOBBYING CERTIFICATION

Certification for Contracts, Grants, Loans, and Cooperative Agreements-The undersigned certifies, to the best of his or her knowledge and belief, that:

No Federal appropriated funds have been paid or will be paid, by or on behalf of the undersigned, to any person for influencing or attempting to influence an officer or employee of an agency, a Member of Congress, an officer or employee of Congress, or an employee of a Member of Congress in connection with the awarding of any Federal contract, the making of any Federal grant, the making of any Federal loan, the entering into of any cooperative agreement, and the extension, continuation, renewal, amendment, or modification of any Federal contract, grant, loan, or cooperative agreement.

If any funds other than Federal appropriated funds have been paid or will be paid to any person for influencing or attempting to influence an officer or employee of any agency, a Member of Congress, an officer or employee of Congress, or an employee of a Member of Congress in connection with this Federal contract, grant, loan, or cooperative agreement, the undersigned shall complete and submit Standard Form-LLL, "Disclosure Form to Report Lobbying," in accordance with its instructions.

The undersigned shall require that the language of this certification be included in the award documents for all subawards at all tiers (including subcontracts, subgrants, and contracts under grants, loans, and cooperative agreements) and that all subrecipients shall certify and disclose accordingly.
This certification is a material representation of fact upon which reliance was placed when this transaction was made or entered into. Submission of this certification is a prerequisite for making or entering into this transaction imposed by section 1352, title 31, U.S. Code. Any person who fails to file the required certification shall be subject to a civil penalty of not less than $10,000 and not more than $100,000 for each such failure.

The Contractor _____ certifies or affirms the truthfulness and accuracy of each statement of its certification and disclosure, if any. In addition, the Contractor understands and agrees that the provisions of 31 U.S.C. Chap. 38, Administrative Remedies for False Claims and Statements, apply to this certification and disclosure, if any.

_____
Signature of Contractor's Authorized Official

_____
Name and Title of Contractor's Authorized Official

_____
Date

REQUIRED FORM
<u>Bidder</u>: Please complete this form and include with bid submission.

DEBARMENT/SUSPENSION CERTIFICATION

Non-Federal entities and contractors are subject to the debarment and suspension regulations implementing Executive Order 12549, Debarment and Suspension (1986) and Executive Order 12689, Debarment and Suspension (1989) at 2 C.F.R. Part 180 and the Department of Homeland Security's regulations at 2 C.F.R. Part 3000 (No procurement Debarment and Suspension).

This requirement applies to all FEMA grant and cooperative agreement programs.

Federal Executive Order (E .O.) 12549 "Debarment" requires that all contractors receiving individual awards, using federal funds, and all sub recipients certify that the organization and its principals are not debarred, suspended, proposed for debarment, declared ineligible, or voluntarily excluded by any Federal department or agency from doing business with the Federal Government. By signing this document, you certify that your organization and its principals are not debarred. Failure to comply or attempts to edit this language may disqualify your bid. Information on debarment is available at the following websites: www.sam.gov and https://acguisition.qov/far/index.html see section 52.209-6.

The Contractor _____ certifies or affirms by your signature that neither you nor your principal is presently debarred, suspended, proposed for debarment, declared ineligible, or voluntarily excluded from participation in this transaction by any federal department or agency.

_____

Signature of Contractor's Authorized Official

_____

Name and Title of Contractor's Authorized Official

_____

Date

REQUIRED FORM
<u>Bidder</u>: Please complete this form and include with bid submission.

CIVIL RIGHTS COMPLIANCE PROVISIONS

EQUAL EMPLOYMENT OPPORTUNITY (Equal Opportunity Clause)

(For all awarded contracts that meet the definition of "federally assisted construction contract" provided in 41 CFR Part 60-1.3)

During the performance of this contract, the contractor agrees as follows:

1) The contractor will not discriminate against any employee or applicant for employment because of race, color, religion, sex, sexual orientation, gender identity, or national origin. The contractor will take affirmative action to ensure that applicants are employed, and that employees are treated during employment without regard to their race, color, religion, sex, sexual orientation, gender identity, or national origin. Such action shall include, but not be limited to the following:

   Employment, upgrading, demotion, or transfer; recruitment or recruitment advertising; layoff or termination; rates of pay or other forms of compensation; and selection for training, including apprenticeship. The contractor agrees to post in conspicuous places, available to employees and applicants for employment, notices to be provided setting forth the provisions of this nondiscrimination clause.

2) The contractor will, in all solicitations or advertisements for employees placed by or on behalf of the contractor, state that all qualified applicants will receive consideration for employment without regard to race, color, religion, sex, sexual orientation, gender identity, or national origin.

3) The contractor will not discharge or in any other manner discriminate against any employee or applicant for employment because such employee or applicant has inquired about, discussed, or disclosed the compensation of the employee or applicant or another employee or applicant. This provision shall not apply to instances in which an employee who has access to the compensation information of other employees or applicants as a part of such employee's essential job functions discloses the compensation of such other employees or applicants to individuals who do not otherwise have access to such information, unless such disclosure is in response to a formal complaint or charge, in furtherance of an investigation, proceeding, hearing, or action, including an investigation conducted by the employer, or is consistent with the contractor's legal duty to furnish information.

4) The contractor will send to each labor union or representative of workers with which he has a collective bargaining agreement or other contract or understanding, a notice to be provided advising the said labor union or workers' representatives of the contractor's commitments under this section and shall post copies of the notice in conspicuous places available to employees and applicants for employment.

5) The contractor will comply with all provisions of Executive Order 11246 of September 24, 1965, and of the rules, regulations, and relevant orders of the Secretary of Labor.

6) The contractor will furnish all information and reports required by Executive Order 11246 of September 24, 1965, and by rules, regulations, and orders of the Secretary of Labor, or pursuant thereto, and will permit access to his books, records, and accounts by the administering agency and the Secretary of Labor for purposes of investigation to ascertain compliance with such rules, regulations, and orders.

7) In the event of the contractor's noncompliance with the nondiscrimination clauses of this contract or with any of the said rules, regulations, or order this contract may be canceled, terminated, or suspended in whole or in part and the contractor may be declared ineligible for further Government contracts or federally assisted construction contracts in accordance with procedures authorized in Executive Order 11246 of September 24, 1965, and such other sanctions may be imposed and remedies invoked as provided in Executive Order 11246 of September 24, 1965, or by rule, regulation, or order of the Secretary of Labor, or as otherwise provided by law.

8) The contractor will include the portion of the sentence immediately preceding paragraph (1) and the provisions of paragraphs (1) through (8) in every subcontract or purchase order unless exempted by rules, regulations, or orders of the Secretary of Labor issued pursuant to section 204 of Executive Order 11246 of September 24, 1965, so that such provisions will be binding upon each subcontractor or vendor. The contractor will take such action with respect to any subcontract or purchase order as the administering agency may direct as a means of enforcing such provisions, including sanctions for noncompliance:

Provided, however, that in the event a contractor becomes involved in, or is threatened with, litigation with a subcontractor or vendor as a result of such direction by the administering agency, the contractor may request the United States to enter into such litigation to protect the interests of the United States.

The applicant further agrees that it will be bound by the above equal opportunity clause with respect to its own employment practices when it participates in federally assisted construction work: Provided, that if the applicant so participating is a State or local government, the above equal opportunity clause is not applicable to any agency, instrumentality or subdivision of such government which does not participate in work on or under the contract.

The applicant agrees that it will assist and cooperate actively with the administering agency and the Secretary of Labor in obtaining the compliance of contractors and subcontractors with the equal opportunity clause and the rules, regulations, and relevant orders of the Secretary of Labor, that it will furnish the administering agency and the Secretary of Labor such information as they may require for the supervision of such compliance, and that it will otherwise assist the administering agency in the discharge of the agency's primary responsibility for securing compliance.

The applicant further agrees that it will refrain from entering into any contract or contract modification subject to Executive Order 11246 of September 24, 1965, with a contractor debarred from, or who has not demonstrated eligibility for, Government contracts and federally assisted construction contracts pursuant to the Executive Order and will carry out such sanctions and penalties for violation of the equal opportunity clause as may be imposed upon contractors and subcontractors by the administering agency or the Secretary of Labor pursuant to Part II, Subpart D of the Executive Order. In addition, the applicant agrees that if it fails or refuses to comply with these undertakings, the administering agency may take any or all of the following actions: Cancel, terminate, or suspend in whole or in part this grant (contract, loan, insurance, guarantee); refrain from extending any further assistance to the applicant under the program with respect to which the failure or refund occurred until satisfactory assurance of future compliance has been received from such applicant; and refer the case to the Department of Justice for appropriate legal proceedings.

_____

Signature of Contractor's Authorized Official

_____

Name and Title of Contractor's Authorized Official

_____

Date

REQUIRED FORM
<u>Bidder</u>: Please complete this form and include with bid submission.

SECTION 3: SPECIAL REQUIREMENTS/BID SUBMISSION INSTRUCTIONS

The following requirements and instructions **supersede** General Requirements where applicable.

1. SUBMISSION OF BID.

Bidder is Responsible for Submitting:

One (1) Original and Two (2) Bid Copies; with all copies to include a Completed Copy of this specifications packet, drawings, and project manuals IN THEIR ENTIRETY. Technical Specifications/Project manuals, and drawings -only- may be submitted as double-sided copies.

The County requests that bid submissions NOT be bound by staples or glued spines.

Each Bidder shall ensure that required parts of their bid submission are completed with accuracy and submitted as per the requirements within this specifications packet, including any addenda.

Additionally, Bidder shall monitor the Jefferson County Purchasing Department Website for any addenda, additional instructions, or bid updates. https://www.co.jefferson.tx.us/Purchasing/

Failure to return and/or complete all required documentation will result in a response being declared as non-responsive.

Bids must be submitted in complete original form by mail or messenger to the following address:
Jefferson County Purchasing Department
1149 Pearl Street, 1st Floor
Beaumont, TX 77701

BID PACKAGING: Bidder shall submit response in a tightly sealed opaque envelope or box, plainly marked "SEALED BID." The outside of the envelope of box shall also include the IFB Number, IFB Name, IFB Due Date, and the Bidder's Name and Address; and shall be addressed to the Purchasing Agent.

All submissions must be received by 11:00 am CT, Wednesday, February 15, 2023.

Bids will be accepted at the above address until the time and date specified herein, and immediately after will be publicly opened and read aloud.

Jefferson County will not accept any responsibility for bids being delivered by third party carriers.

Late bids will not be accepted and will be returned unopened to the Bidder.
Jefferson County shall not be responsible for any effort or cost expended in the preparation of a response to this IFB.

All bid responses submitted in response to this invitation shall become the property of Jefferson County and will be a matter of public record available for review.

All protests should be coordinated through the Purchasing Office prior to award recommendation to Commissioners' Court.

COURTHOUSE SECURITY: All visitors to the Courthouse must pass through Security. Respondents planning to hand deliver proposals must allow time to get through Security, as a delay in entering the Courthouse will not be accepted as an excuse for late submittal. Mondays and Tuesdays are particularly heavy days.

In response to the Covid-19 pandemic, Jefferson County has implemented precautionary measures as currently recommended by the CDC within its facilities. Bidders are strongly urged to plan accordingly.

COUNTY HOLIDAYS (2023):

~~January 16~~	~~Martin Luther King, Jr. Day~~	~~Monday~~
February 20	President's Day	Monday
April 7	Good Friday	Friday
May 29	Memorial Day	Monday
July 4	Independence Day	Tuesday
September 4	Labor Day	Monday
November 10	Veteran's Day	Friday
November 23 & 24	Veteran's Day	Thursday & Friday
December 25 & 26	Christmas	Monday
January 1, 2024	New Year's	Monday

Submissions During Time of Inclement Weather, Disaster, or Emergency:

In case of inclement weather or any other unforeseen event causing the County to close for business on the date of a bid/proposal/statement of qualifications submission deadline, the IFB closing will automatically be postponed until the next business day that County offices are open to the public. Should inclement weather conditions or any other unforeseen event cause delays in courier service operations, the County may issue an addendum to all known vendors interested in the project to extend the deadline. It will be the responsibility of the vendor to notify the county of their interest in the project should these conditions impact their ability to submit a bid/proposal/statement of qualifications submission before the stated deadline. The County reserves the right to make the final judgement call to extend any deadline.

Should an emergency or unanticipated event interrupt normal County processes, and bid/proposal/statement of qualifications submissions cannot be received by the Jefferson County Purchasing Department's office by the exact time specified in the IFB and urgent County requirements preclude amendment to the IFB, the time specified for receipt of Statements of Qualifications will be deemed to be extended to the same time of day specified in the solicitation on the first business day on which normal County processes resume.

2. PRE-BID MEETING AND WALK-THROUGH.

There will be a **non-mandatory Pre-Bid Conference and Walk-Through at 2:00 PM CT, Thursday, January 26, 2023** at the Airport Administration Conference Room located at 5000 Jerry Ware Blvd. Beaumont, Texas 77705.

As access to certain areas of the airport is limited due to federal regulations, this conference will be the Bidder's only opportunity to view secured areas of the project.

3. QUESTIONS/DEADLINE FOR QUESTIONS.

Questions may be emailed to Jamey West, Contract Specialist at: Jamey.West@jeffcotx.us

The Deadline for asking questions or requesting additional information (in writing) is 5:00 pm CT, Friday, February 3, 2023.

4. VENDOR REGISTRATION (System for Award Management).

Vendors doing business with Jefferson County are required to be registered with The System for Award Management (SAM), with an "active" status. The System for Award Management (SAM) is the Official U.S. Government system that consolidated the capabilities of CCR/FedReg, ORCA, and EPLS. There is NO fee to register for this site. Entities may register at no cost directly from the SAM website at: ***https://www.sam.gov***

In instances where a vendor has either an "Inactive" SAM Registration or is not currently registered with the System for Award Management, the Purchasing Department may *initially* accept proof (printout from the SAM website) that the vendor has begun the registration process in order for the IFB/RFQ/RFP submission to be considered as "responsive" to the specifications for the project.

However, the SAM Registration must be completed (showing "active" status, with no exclusions) prior to the award and/or execution of an agreement or contract for the project.

5. FORM 1295 (Texas Ethics Commission) SUBMISSSION REQUIREMENT/INSTRUCTIONS FOR BIDDERS.

All Non-Exempt Bidders are required to submit a completed FORM 1295 with bid submission.

1. Submit a FORM 1295 online via the Texas Ethics Commission website link below.
Vendors must enter the required information on Form 1295, and print a copy of the completed form.
The form will include a certification of filing that will contain a unique certification number.

2. Submit a FORM 1295 hard copy (completed & signed by an Authorized Agent of the Awarded Vendor), to the Jefferson County Purchasing Department **with bid submission.**

FORM 1295, Completion Instructions, and Login Instructions are available via the Texas Ethics Commission Website at: https://www.ethics.state.tx.us/whatsnew/elf_info_form1295.htm

A sample of a completed FORM 1295 is included on **PAGE 35**.

FORM 1295 Implementation Background:

In accordance with House Bill 1295 (passed January 1, 2016), Vendors entering into contracts and professional agreements with Jefferson County will be required to complete a Certificate of Interested Parties (FORM 1295), **unless contract is considered exempt as described below.**

In 2017, the Texas legislature amended the law to require Form 1295 to include an "unsworn declaration" which includes, among other things, the date of birth and address of the authorized representative signing the form. The unsworn declaration, including the date of birth and address of the signatory, replaces the notary requirement that applied to contracts entered into before January 1, 2018. The TEC filing application does not capture the date of birth or street address of the signatory and it will not appear on forms that are filed using the TEC filing application.

Changes to the law requiring certain businesses to file a Form 1295 are in effect for contracts entered into or amended on or after January 1, 2018. The changes exempt businesses from filing a Form 1295 for certain types of contracts and replace the need for a completed Form 1295 to be notarized. Instead, the person filing a 1295 needs to complete an "unsworn declaration."

Question: Will the date of birth and address provided appear on the TEC's website when the form is filed?

Answer: No. The TEC filing application does not capture the date of birth or street address of the signatory and it will not appear on forms that are filed using the TEC filing application. Although the TEC does not capture the date of birth and street address of the signatory, the contracting state agency or governmental agency will have a physical copy of the form that includes the date of birth and address of the signatory. The TEC cannot answer whether the contracting state agency or governmental agency may release such information. Questions regarding the Texas Public Information Act may be directed to the Office of the Attorney General. See also Paxton v. City of Dall., No. 03-13-00546-CV, 2015 Tex. App. LEXIS 5228, at *10-11 (App.—Austin May 22, 2015) (mem. op.) (pet. denied) (available here)

FORM 1295 EXEMPTIONS:

What type of contracts are exempt from the Form 1295 filing requirement under the amended law?
The amended law adds to the list of types of contract exempt from the Form 1295 filing requirement.

A completed Form 1295 is not required for:
• a sponsored research contract of an institution of higher education
• an interagency contract of a state agency or an institution of higher education
• a contract related to health and human services if: the value of the contract cannot be determined at the time the contract is executed; and any qualified vendor is eligible for the contract
• a contract with a publicly traded business entity, including a wholly owned subsidiary of the business entity
• a contract with an electric utility, as that term is defined by Section 31.002, Utilities Code
• a contract with a gas utility, as that term is defined by Section 121.001, Utilities Code

<u>BIDDER</u>: INSERT PROOF OF SYSTEM FOR AWARD MANAGEMENT (SAM) REGISTRATION BEHIND THIS PAGE.

SAMPLE COMPLETED FORM 1295

CERTIFICATE OF INTERESTED PARTIES

FORM 1295

OFFICE USE ONLY

Complete Nos. 1 - 4 and 6 if there are interested parties.
Complete Nos. 1, 2, 3, 5, and 6 if there are no interested parties.

1 **Name of business entity filing form, and the city, state and country of the business entity's place of business.**

YOUR FIRM NAME HERE

2 **Name of governmental entity or state agency that is a party to the contract for which the form is being filed.**

**JEFFERSON COUNTY, TEXAS*

3 **Provide the identification number used by the governmental entity or state agency to track or identify the contract, and provide a description of the services, goods, or other property to be provided under the contract.**

BID/CONTRACT/PO NUMBER GOES HERE

4

Name of Interested Party	City, State, Country (place of business)	Nature of Interest (check applicable)	
		Controlling	Intermediary
NAME OF PERSON/PERSONS THAT OWN BUSINESS GOES HERE. MUST LIST ANY PERSON THAT DOES NOT WORK FOR THE COMPANY LISTED IN #1 THAT WILL PROFIT FROM THE BID/CONTRACT/PO			

5 **Check only if there is NO Interested Party.** ☐ **ONLY CHECK IF NO CONTROLLING OR INTERMEDIARY PARTY**

6 **UNSWORN DECLARATION** Vendor is to complete #6 - Unsworn Declaration

My name is _____, and my date of birth is _____.

My address _____, _____, _____, _____, _____.
(street) (city) (state) (zip code) (country)

I declare under penalty of perjury that the foregoing is true and correct.

Executed in _____ County, State of _____, on the _____ day of _____, 20_____.
(month) (year)

_____
Signature of authorized agent of contracting business entity
(Declarant)

ADD ADDITIONAL PAGES AS NECESSARY

Form provided by Texas Ethics Commission www.ethics.state.tx.us Revised 12/22/2017

Must file online at www.ethics.state.tx.us/File

<u>BIDDER</u>: INSERT COMPLETED FORM 1295 BEHIND THIS PAGE.

6. MULTIPLE VENDOR AWARD.

Jefferson County reserves the right to award this contract to more than one vendor at the County's discretion.

7. DELIVERY.

If delivery is required, all items must be packaged so as to be protected from damage during shipping and handling. Any item(s) damaged in shipping must be replaced in kind, or repaired, by the contractor, at the discretion of, and at no additional charge to, Jefferson County.

8. PAYMENT.

Jefferson County will pay original invoices that clearly itemize the goods and/or services provided as to quantity, part number, description, price, applicable discount (if any), labor charges showing time differential, if applicable and if previously agreed to, and delivery, installation, and set-up costs, if applicable and if previously agreed to. Only charges as stated on the Bid Form(s) submitted as a part of the bid will be considered.

Invoices must indicate Jefferson County as applicable, the address to which the product(s) and/or service(s) were delivered, and the applicable purchase order number. Invoices will be matched to delivery tickets prior to payment; therefore, all delivery tickets should have an accurate description of the product(s) and/or service(s).

Invoices shall be submitted to:
Jefferson County Auditing Department
Attention: Accounts Payable
1149 Pearl Street, 7th floor
Beaumont, TX 77701.

9. USAGE REPORTS.

Jefferson County reserves the right to request, and receive at no additional cost, up to two (2) times during the contract period, a usage report detailing the products and/or services furnished to date under a contract resulting from this IFB. The reports must be furnished no later than five (5) working days after written request and itemize all purchases to date by Jefferson County department, description of each item purchased, including manufacturer, quantity of each item purchased, per unit and extended price of each item purchased, and total amount and price of all items purchased.

10. INSURANCE.

The contractor (including any and all subcontractors as defined in Section 11.1.3 below) shall, at all times during the term of this contract, maintain insurance coverages with not less than the type and requirements shown below. Such insurance is to be provided at the sole cost of the contractor. These requirements do not establish limits of the contractor's liability.

All policies of insurance shall waive all rights of subrogation against the County, its officers, employees and agents; a copy of the policy wording or endorsement is required.

Contractor shall furnish Jefferson County with Certificate of Insurance naming Jefferson County as additional insured and will provide the actual policy wording or endorsement showing as such.

All insurance must be written by an insurer licensed to conduct business in the State of Texas.

Minimum Insurance Requirements:

Public Liability, including Products & Completed Operations	$1,000,000
Excess Liability	$1,000,000

Property Insurance (policy below that is applicable to this project):
Improvements & Betterments Policy: Improvements/Remodeling (for Lease Tenants)
Builder's Risk Policy: Structural Coverage for Construction Projects
Installation Floater Policy: Improvements/Alterations to Existing Structure

Workers' Compensation Statutory Coverage (See Section 9 Below)

11. WORKERS' COMPENSATION INSURANCE

11.1 Definitions:

11.1.1 **Certificate of coverage ("Certificate")** – A copy of a certificate of insurance, a certificate of authority to self-insure issued by the commission, or a coverage agreement, DWC-81, DWC-82, DWC-83, or DWC-84 showing statutory workers' compensation insurance coverage for the person's or entity's employees providing services on a project, for the duration of the project.

11.1.2 **Duration of the project** – Includes the time from the beginning of the work on the project until the contractor's/person's work on the project has been completed and accepted by the governmental entity.

11.1.3 **Persons providing services on the project ("subcontractor") in article 406.096** – Includes all persons or entities performing all or part of the services under the contractor has undertaken to perform on the project, regardless of whether that person contracted directly with the contractor and regardless of whether that person has employees. This includes, without limitation, independent contractors, subcontractor, leasing companies, motor carriers, owner-operators, employees of any such entity, or employees of any entity which furnishes persons to provide services on the project. "Services" includes, without limitation, providing, hauling or delivering equipment or materials, or providing labor, transportation, or other service related to a project. "Services" does not include activities unrelated to the project, such as food/beverage vendors, office supply deliveries, and delivery of portable toilets.

11.2 The Contractor shall provide coverage, based on proper reporting of classification code and payroll amounts and filing any coverage agreements, which meets the statutory requirements of Texas Labor Code, Section 401.011(44) for all employees of the contractor providing services on the project, for the duration of the project.

11.3 The Contractor must provide a certificate of coverage to the governmental entity prior to being awarded the contract – <u>refer to Section 10 above</u>.

11.4 If the coverage period shown on the Contractor's current certificate of coverage ends during the duration of the project, the Contractor must, prior to the end of the coverage period, file a new certificate of coverage with the governmental entity showing that coverage has been extended.

11.5 The Contractor shall obtain from each person providing services on a project, and provide to the governmental entity:

11.5.1 A certificate of coverage, prior to that person beginning work on the project, so the governmental entity will have on file certificates of coverage showing coverage for all persons providing services on the project; and

11.5.2 No later than seven (7) days after receipt by the Contractor, a new certificate of coverage showing extension of coverage, if the coverage period shown on the current certificate ends during the duration of the project.

11.6 The Contractor shall retain all required certificates of coverage for the duration of the project and for one (1) year thereafter.

11.7 The Contractor shall notify the governmental entity in writing by certified mail or personal delivery, within ten (10) days after the contractor knew or should have known, of any change that materially affects the provision of coverage of any person providing services on the project.

11.8 The Contractor shall post on each project site a notice, in the text, form and manner prescribed by the Texas Department of Workers' Compensation, informing all persons providing services on the project that they are required to be covered, and stating how a person may verify coverage and report lack of coverage.

11.9 The Contractor shall contractually require each person with whom it contracts to provide services on a project to:

11.9.1 Provide coverage, based on reporting of classification codes and payroll amounts and filing of any coverage agreements, which meets the statutory requirements of Texas Labor Code, Section 401.011(44) for all its employees providing services on the project, for the duration of the project.

11.9.2 Provide to the Contractor, prior to that person beginning work on the project a certificate of coverage showing that coverage is being provided for all employees of the person providing services on the project, for the duration of the project.

11.9.3 Provide the Contractor, prior to the end of coverage period, a new certificate of coverage showing extension of coverage, if the coverage period shown on the current certificate of coverage ends during the duration of the project.

11.9.4 Obtain from each person with whom it contracts, and provide to the Contractor:

11.9.4.1 A certificate of coverage, prior to the other person beginning work on the project; and

11.9.4.2 the coverage period, if the coverage period shown on the current certificate of a new certificate of coverage showing extension of coverage, prior to the end of coverage ends during the duration of the project.

11.9.5 Retain all required certificates of coverage on file for the duration of the project and for one (1) year thereafter.

11.9.6 Notify the governmental entity in writing by certified mail or personal delivery, within ten (10) days after the person knew or should have known, of any change that materially affects the provision of coverage of any person providing services on the project; and

11.9.7 Contractually require each person with whom it contracts to perform as required by paragraphs 11.1. – 11.7., with the certificates of coverage to be provided to the person for whom they are providing services.

11.10 By signing this contract or providing or causing to be provided a certificate of coverage, the Contractor is representing to the governmental entity that all employees of the contractor who will provide services of the project will be covered by workers' compensation coverage for the duration of the project, that the coverage will be based on proper reporting of classification codes and payroll amounts, and that all coverage agreements will be filed with the appropriate insurance carrier or, in the case of a self-insured, with the commission's Division of Self-Insurance Regulation. Providing false or misleading information may subject the contractor to administrative penalties, criminal penalties, civil penalties, or other civil actions.

11.11 The Contractor's failure to comply with any of these provisions is a breach of contract by the Contractor which entitles the governmental entity to declare the contract void if the Contractor does not remedy the breach within ten (10) days after receipt of notice of breach from the governmental entity.

<u>BIDDER</u>: INSERT COPY OF CERTIFICATE OF INSURANCE (COI) BEHIND THIS PAGE.

Note: For bid purposes, a general COI will suffice. However, a COI that includes the notation that "Jefferson County as an additional insured" will be required from Awarded Bidder(s) prior to the issuance of a Purchase Order.

<u>BIDDER</u>: INSERT BID SURETY BEHIND THIS PAGE.

BIDDER INFORMATION FORM

Instructions: Complete the form below. Please provide legible, accurate, and complete contact information. PLEASE PRINT.

Bid Number & Name: Invitation for Bid (IFB 22-073/JW)
Main Terminal HVAC Rehabilitation at the Jack Brooks Regional Airport

Bidder's Company/Business Name: _____

Bidder's TAX ID Number: _____

If Applicable: **HUB Vendor No**. _____ **DBE Vendor No**. _____

Contact Person: _____ **Title:** _____

Phone Number (with area code): _____

Alternate Phone Number if available (with area code):_____

Fax Number (with area code):_____

Email Address: _____

Mailing Address (Please provide a <u>physical address for bid bond return</u>, if applicable):

_____
Address

_____
City, State, Zip Code

REQUIRED FORM
<u>Bidder</u>: Please complete this form and include with bid submission.

SECTION 4: SCOPE

The following requirements and specifications supersede General Bid Requirements where applicable. Any questions relating to bid submission or bid item specifications requirements should be directed to Jamey West, Contract Specialist with the Jefferson County Purchasing Department at 409-835-8593 or via email at: Jamey.West@jeffcotx.us . Please reference Bid Number: IFB 22-073/JW.

SCOPE OF PROJECT:

The project's scope consists of rehabilitation of the HVAC system at the Jack Brooks Regional Airport Terminal. The scope includes replacement of one chiller and one boiler, including associated pumps, accessories, and BAS controls and related electrical & plumbing. The scope also includes miscellaneous repairs and improvements to the air handler control valves and piping insulation. The bid alternate's scope includes replacement of existing air handlers, associated accessories, and BAS controls.

Work is in at an existing and operating airport terminal with portions of work area is under control of TSA. Contractor is responsible to coordinate the work schedule and obey by all required security protocols.

REQUIRED FORM
Bidder: Please complete this form and include with bid submission.

22-413 Jefferson County Regional Airport Main Terminal HVAC

Date:_____

_____
CONTRACTOR

_____
ADDRESS

_____

Gentlemen:

We propose to furnish all labor, material, and equipment to perform all work necessary to furnish and install the HVAC equipment, piping, controls and related work for the **Southeast Texas Reginal Airport Main Terminal, Jefferson County** in strict accordance with contract documents prepared by Sigma Engineers, Inc., for the following lump sum:

BIDDER: PLEASE TYPE OR WRITE LEGIBALLY.

Base Bid to perform all work less the replacement of the Air Handling Units:

_____
BASE BID WRITTEN IN WORDS

DOLLARS: $_____ . _____
BASE BID WRITTEN NUMERICALLY

Summarized cost breakdown of the above is as follows:

Chiller & Associated Piping/Electrical	$_____ . ____
Chilled Water Pumps 1 & 2 and Associated Piping/Electrical	$_____ . ____
Boiler B-1, Hot Water Pumps 2 & 3 and Associated Piping/Electrical	$_____. ____
Control Integration	$_____. ____
Insulation Replacement	$_____. ____

BID FORM CONTINUED ON NEXT PAGE.

Alternate #1 Bid to provide removal and replacement of all Air Handling Units 1-7:

_____
ALTERNATE #1 BID WRITTEN IN WORDS

DOLLARS: $_____ . _____
ALTERNATE #1 BID WRITTEN NUMERICALLY.

Summarized cost breakdown of the above is as follows:

Air Handler Units 1	$_____
Air Handler Units 2	$_____
Air Handler Units 3	$_____
Air Handler Units 4	$_____
Air Handler Units 5	$_____
Air Handler Units 6	$_____
Air Handler Units 7	$_____

Total Base Bid & Alternate #1 Bid:

_____
ALTERNATE #1 BID WRITTEN IN WORDS

DOLLARS: $_____ . _____
ALTERNATE #1 BID WRITTEN NUMERICALLY.

PERCENT OF MARKUP ON MATERIALS & SUBCONTRACTORS FOR ADDITIONAL WORK
To be applied for overhead and profit excluding markup on direct contractor's labor:

PERCENT: _____ %

BIDDER ACKNOWLEDGEMENT OF BID ADDENDA (IF APPLICABLE):

Addendum 1	_____	Date Received_____
Addendum 2	_____	Date Received_____
Addendum 3	_____	Date Received_____

BIDDER: INCLUDE FULL, SIGNED, & ATTESTED COPY OF EACH ADDENDUM ISSUED WITH BID SUBMISSION.

BID FORM CONTINUED ON NEXT PAGE.

LIST OF PROPOSED SUBCONTRACTORS:

Demolition _____

Foundation/ Concrete/ Supports _____

Mechanical _____

Electrical _____

Plumbing/ Piping _____

Proposed Project Manager _____

Proposed Project Superintendent _____

The proposed persons and their experience are a gauge for a selection of the successful contractor and shall remain the same through the construction.

BIDDER: PLEASE PROVIDE # OF DAYS FOR SUBSTANTIAL COMPLETION (BELOW):
Upon receipt of notice of acceptance of our bid, we agree to execute the formal contract within ten (10) days after such notice. We further agree that, if awarded the Contract, the work will be substantially completed not later than, _____ calendar days.

We have examined the site of the work and nature and kind of work to be performed and informed ourselves of all local conditions and other things that might affect the cost of difficulties of performance and we represent that we have had the experience in the use of materials and methods of performance specified and that we can and will do the work and construct the improvements with the specified materials as contemplated and indicated by the contract documents.

Any additional work schedule be on lumpsum basis or cost plus per enclosed all-inclusive billing rate without any another charges or markup.

We commit to honor this proposal valid for 30 days from this date:

Respectfully submitted,

_____
Firm Name

_____
Address

_____
By Authorized Agent: (Name)

_____
Signature
SEAL (IF BID BY CORPORATION)

END OF SECTION 00 41 00

VENDOR REFERENCES FORM

Bidder: Please list at least three (3) companies or governmental agencies (preferably a municipality) where the same or similar products and/or services as contained in this specification package were recently provided.

REQUIRED FORM
Bidder: Please complete this form and include with bid submission.

REFERENCE ONE

Government/Company Name: _____

Address: _____

Contact Person and Title: _____

Phone: _____ Fax: _____

Email Address: _____ Contract Period: _____

Scope of Work:

REFERENCE TWO

Government/Company Name: _____

Address: _____

Contact Person and Title: _____

Phone: _____ Fax: _____

Email Address: _____ Contract Period: _____

Scope of Work:

REFERENCE THREE

Government/Company Name: _____

Address: _____

Contact Person and Title: _____

Phone: _____ Fax: _____

Email Address: _____ Contract Period: _____

Scope of Work: _____

SIGNATURE PAGE

As permitted under Article 4413 (32c) V.A.C.S., other governmental entities may wish to participate under the same terms and conditions contained in this contract (i.e., piggyback). In the event any other entity participates, all purchase orders will be issued directly from and shipped directly to the entity requiring supplies/services. Jefferson County shall not be held responsible for any orders placed, deliveries made or payment for supplies/services ordered by another entity. Each entity reserves the right to determine their participation in this contract.

Would Bidder be willing to allow other governmental entities to piggyback off this contract, if awarded, under the same terms and conditions? ..... **Yes** ☐ **No** ☐

This bid shall remain in effect for ninety (90) days from bid opening and shall be exclusive of federal excise and state and local sales tax (exempt).

The undersigned agrees, if this bid is accepted, to furnish any and all items upon which prices are offered, at the price and upon the terms and conditions contained in the Invitation for Bid, Conditions of Bidding, Terms of Contract, and Specifications and all other items made a part of the accepted contract.

The undersigned affirms that they are duly authorized to execute the contract, that this company, corporation, firm, partnership or individual has not prepared this bid in collusion with any other Bidder, and that the contents of this bid as to prices, terms or conditions of said bid have not been communicated by the undersigned nor by any employee or agent to any other Bidder or to any other person(s) engaged in this type of business prior to the official opening of this bid. And further, that neither the Bidder nor their employees nor agents have been for the past six (6) months directly nor indirectly concerned in any pool or agreement or combination to control the price of goods or services on, nor to influence any person to bid or not to bid thereon.

Bidder (Entity Name)	Signature
Street & Mailing Address	Print Name
City, State & Zip	Date Signed
Telephone Number	Fax Number
E-mail Address	

REQUIRED FORM
<u>Bidder</u>: Please complete this form and include with bid submission.

CERTIFICATION REGARDING LOBBYING

Certification for Contracts, Grants, Loans, and Cooperative Agreements

The undersigned certifies, to the best of his or her knowledge and belief, that:

1. No Federal appropriated funds have been paid or will be paid, by or on behalf of the undersigned, to any person for influencing or attempting to influence an officer or employee of an agency, a Member of Congress, an officer or employee of Congress, or an employee of a Member of Congress in connection with the awarding of any Federal contract, the making of any Federal grant, the making of any Federal loan, the entering into of any cooperative agreement, and the extension, continuation, renewal, amendment, or modification of any Federal contract, grant, loan, or cooperative agreement.

2. If any funds other than Federal appropriated funds have been paid or will be paid to any person for influencing or attempting to influence an officer or employee of any agency, a Member of Congress, an officer or employee of Congress, or an employee of a Member of Congress in connection with this Federal contract, grant, loan, or cooperative agreement, the undersigned shall complete and submit Standard Form-LLL, "Disclosure Form to Report Lobbying," in accordance with its instructions.

3. The undersigned shall require that the language of this certification be included in the award documents for all subawards at all tiers (including subcontracts, subgrants, and contracts under grants, loans, and cooperative agreements) and that all subrecipients shall certify and disclose accordingly.

This certification is a material representation of fact upon which reliance was placed when this transaction was made or entered into. Submission of this certification is a prerequisite for making or entering into this transaction imposed by section 1352, title 31, U.S. Code. Any person who fails to file the required certification shall be subject to a civil penalty of not less than $10,000 and not more than $100,000 for each such failure.

The Contractor, certifies or affirms the truthfulness and accuracy of each statement of its certification and disclosure, if any. In addition, the Contractor understands and agrees that the provisions of 31 U.S.C. Chap. 38, Administrative Remedies for False Claims and Statements, apply to this certification and disclosure, if any.

_____

Signature of Contractor's Authorized Official

_____

Name and Title of Contractor's Authorized Official *(Please Print)*

_____

Date

REQUIRED FORM
<u>Bidder</u>: Please complete this form and include with bid submission.

CONFLICT OF INTEREST QUESTIONNAIRE

FORM CIQ

For vendor doing business with local governmental entity

This questionnaire reflects changes made to the law by H.B. 23, 84th Leg., Regular Session.

This questionnaire is being filed in accordance with Chapter 176, Local Government Code, by a vendor who has a business relationship as defined by Section 176.001(1-a) with a local governmental entity and the vendor meets requirements under Section 176.006(a).

By law this questionnaire must be filed with the records administrator of the local governmental entity not later than the 7th business day after the date the vendor becomes aware of facts that require the statement to be filed. *See* Section 176.006(a-1), Local Government Code.

A vendor commits an offense if the vendor knowingly violates Section 176.006, Local Government Code. An offense under this section is a misdemeanor.

OFFICE USE ONLY

Date Received

1 **Name of vendor who has a business relationship with local governmental entity.**

2 ☐ **Check this box if you are filing an update to a previously filed questionnaire.**

(The law requires that you file an updated completed questionnaire with the appropriate filing authority not later than the 7th business day after the date on which you became aware that the originally filed questionnaire was incomplete or inaccurate.)

3 **Name of local government officer about whom the information in this section is being disclosed.**

_____
Name of Officer

This section (item 3 including subparts A, B, C, & D) must be completed for each officer with whom the vendor has an employment or other business relationship as defined by Section 176.001(1-a), Local Government Code. Attach additional pages to this Form CIQ as necessary.

A. Is the local government officer named in this section receiving or likely to receive taxable income, other than investment income, from the vendor?

☐ Yes ☐ No

B. Is the vendor receiving or likely to receive taxable income, other than investment income, from or at the direction of the local government officer named in this section AND the taxable income is not received from the local governmental entity?

☐ Yes ☐ No

C. Is the filer of this questionnaire employed by a corporation or other business entity with respect to which the local government officer serves as an officer or director, or holds an ownership interest of one percent or more?

☐ Yes ☐ No

D. Describe each employment or business and family relationship with the local government officer named in this section.

4

_____ _____
Signature of vendor doing business with the governmental entity Date

Adopted 8/7/2015

REQUIRED FORM
<u>Bidder</u>: Please complete this form and include with bid submission.

LOCAL GOVERNMENT OFFICER CONFLICTS DISCLOSURE STATEMENT

FORM CIS

This questionnaire reflects changes made to the law by H.B. 23, 84th Leg., Regular Session.

This is the notice to the appropriate local governmental entity that the following local government officer has become aware of facts that require the officer to file this statement in accordance with Chapter 176, Local Government Code.

OFFICE USE ONLY

Date Received

1 **Name of Local Government Officer**

2 **Office Held**

3 **Name of vendor described by Sections 176.001(7) and 176.003(a), Local Government Code**

4 **Description of the nature and extent of employment or other business relationship with vendor named in item 3**

5 **List gifts accepted by the local government officer and any family member, if aggregate value of the gifts accepted from vendor named in item 3 exceeds $100 during the 12-month period described by Section 176.003(a)(2)(B).**

Date Gift Accepted _____ Description of Gift _____

Date Gift Accepted _____ Description of Gift _____

Date Gift Accepted _____ Description of Gift _____

(attach additional forms as necessary)

6 **AFFIDAVIT**

I swear under penalty of perjury that the above statement is true and correct. I acknowledge that the disclosure applies to each family member (as defined by Section 176.001(2), Local Government Code) of this local government officer. I also acknowledge that this statement covers the 12-month period described by Section 176.003(a)(2)(B), Local Government Code.

_____
Signature of Local Government Officer

AFFIX NOTARY STAMP / SEAL ABOVE

Sworn to and subscribed before me, by the said _____, this the _____ day of _____, 20 _____ , to certify which, witness my hand and seal of office.

_____
Signature of officer administering oath | Printed name of officer administering oath | Title of officer administering oath

Adopted 8/7/2015

THIS FORM IS FOR OFFICE USE ONLY

GOOD FAITH EFFORT (GFE) DETERMINATION CHECKLIST

Bidder intends to utilize subcontractors/subconsultants in the fulfillment of this contract (if awarded).
☐ Yes ☐ No

Instructions: In order to determine if a "Good Faith Effort" was made in soliciting DBEs for subcontracting opportunities, the following checklist and supporting documentation shall be completed by the Prime Contractor/Consultant, and returned with the Prime Contractor/ Consultant's bid. This list contains the **minimum** efforts that should be put forth by the Prime Contractor/Consultant when attempting to achieve or exceed the goals of DBE Subcontractor participation. The Prime Contractor/Consultant may extend his/her efforts in soliciting DBE Subcontractor participation beyond what is listed below.

Did the Prime Contractor/Consultant . . .?

☐ Yes ☐ No 1. To the extent practical, and consistent with standard and prudent industry standards, divide the contract work into the smallest feasible portions, to allow for maximum DBE Subcontractor participation?

☐ Yes ☐ No 2. **Notify** in writing a reasonable number of DBEs, allowing sufficient time for effective participation of the planned work to be subcontracted?

☐ Yes ☐ No 3. **Provide** DBEs that were genuinely interested in bidding on a subcontractor, adequate information regarding the project (i.e., plans, specifications, scope of work, bonding and insurance requirements, and a point of contract within the Prime Contractor/Consultant's organization)?

☐ Yes ☐ No 4. **Negotiate** in good faith with interested DBEs, and not reject bids from DBEs that qualify as lowest and responsive Bidders?

☐ Yes ☐ No 5. **Document** reasons DBEs were rejected? Was a written rejection notice, including the reason for rejection, provided to the rejected DBEs?

☐ Yes ☐ No 6. If Prime Contractor/Consultant has zero (0) DBE participation, **please explain the reasons why.**

If "No" was selected, please explain and include any pertinent documentation with your bid.
If necessary, please use a separate sheet to answer the above questions.

Printed Name of Authorized Representative	Signature
Title	Date

REQUIRED FORM
<u>Bidder</u>: Please complete this form and include with bid submission.

NOTICE OF INTENT (NOI) TO SUBCONTRACT WITH DISADVANTAGED BUSINESS ENTERPRISE (DBE)

Bidder intends to utilize subcontractors/subconsultants in the fulfillment of this contract (if awarded).
☐ Yes ☐ No

Instructions for Prime Contractor/Consultant: Bidder shall submit this form with the bid; however, the information below may be submitted after contract award, but prior to beginning performance on the contract. Please submit one form for each DBE Subcontractor/Subconsultant with proper signatures, per the terms and conditions of your contract.

Contractor Name: _____ DBE: ☐ Yes ☐ No

Address: _____
Street City State Zip

Phone (with area code): _____ Fax (with area code): _____

Project Title & No.: _____

Prime Contract Amount: $ _____

DBE Subcontractor Name: _____

DBE Status (Gender & Ethnicity): _____

Certifying Agency: ☐ Tx. Bldg & Procurement Comm. ☐ Jefferson County ☐ Tx Unified Certification Prog.

Address: _____
Street City State Zip

Phone (with area code): _____ Fax (with area code): _____

Proposed Subcontract Amount: $ _____ Percentage of Prime Contract: _____ %

Description of Subcontract Work to be Performed: _____

_____

_____	_____	_____
Printed Name of Contractor Representative	Signature of Representative	Date
_____	_____	_____
Printed Name of DBE	Signature of Representative	Date

Note: Nothing on this Notice of Intent Form is intended to confer any rights, expressed or implied, to any third parties.

Pre-Approval for Subcontractor Substitutions must be obtained from the Jefferson County Purchasing Agent's Representative. The "DBE Subcontractor/Subconsultant Change Form" must be completed and faxed to 409-835-8456.

REQUIRED FORM
<u>Bidder</u>: Please complete this form and include with bid submission.

DISADVANTAGED BUSINESS ENTERPRISE (DBE)
SUBCONTRACTING PARTICIPATION DECLARATION FORM

Bidder intends to utilize subcontractors/subconsultants in the fulfillment of this contract (if awarded).
☐ Yes ☐ No

Prime Contractor: _____ DBE: ☐ Yes ☐ No

DBE Status (Gender & Ethnicity): _____

Address: _____
Street City State Zip

Phone (with area code): _____ Fax (with area code): _____

Project Title & No.: _____ IFB/RFP No.: _____

Total Contract: $ _____ Total DBE Subcontract(s): $ _____

Construction DBE Goals: ____% MBE: _____ % WBE: _____ %

Sub-goals: 1.7 African-American, 9.7% Hispanic, 0.7% Native American, 0.8% Asian American.
Use these goals as a guide to diversify.

FOR DBE OFFICE USE ONLY:

Verification date DBE Program Office reviewed and verified DBE Sub information Date: _____ Initials: _____

PART I. DBE SUBCONTRACTOR DISCLOSURE

DBE Subcontractor Name: _____

DBE Status (Gender & Ethnicity): _____

Certifying Agency: ☐ Texas Bldg & Procurement Comm. ☐ Texas Unified Certification Prog.

Address: _____
Street City State Zip

Contact person: _____ Title: _____

Phone (with area code): _____ Fax (with area code): _____

Proposed Subcontract Amount: $ _____ Percentage of Prime Contract: _____ %

Description of Subcontract Work to be Performed: _____

REQUIRED FORM
<u>Bidder</u>: Please complete this form and include with bid submission.

DBE Subcontractor Disclosure

PART I: Continuation Sheet (Duplicate as Needed)

DBE Subcontractor Name: _____

DBE Status (Gender & Ethnicity): _____

Certifying Agency: ☐ Tx. Bldg & Procurement Comm. ☐ Jefferson County ☐ Tx Unified Certification Prog.

Address: _____
Street City State Zip

Contact person: _____ Title: _____

Phone (with area code): _____ Fax (with area code): _____

Proposed Subcontract Amount: $ _____ Percentage of Prime Contract: _____ %

Description of Subcontract Work to be Performed: _____

DBE Subcontractor Name: _____

DBE Status (Gender & Ethnicity): _____

Certifying Agency: ☐ Tx. Bldg & Procurement Comm. ☐ Jefferson County ☐ Tx Unified Certification Prog.

Address: _____
Street City State Zip

Contact person: _____ Title: _____

Phone (with area code): _____ Fax (with area code): _____

Proposed Subcontract Amount: $ _____ Percentage of Prime Contract: _____ %

Description of Subcontract Work to be Performed: _____

All DBE Subcontractor Participation may be verified with the DBE Subcontractor(s) listed on Part I.

REQUIRED FORM
Bidder: Please complete this form and include with bid submission.

PART II: STATEMENT OF NON-COMPLIANCE FOR NOT MEETING DBE SUBCONTRACTING GOALS

Please complete Good Faith Effort (GFE) Checklist and attach any supporting documentation.

Our firm was unable to meet the DBE goals for this project for the following reasons:

- ☐ All subcontractors to be utilized are "Non-DBEs." *(Complete Part III)*
- ☐ DBEs were solicited but did not respond.
- ☐ DBEs solicited were not competitive.
- ☐ DBEs were unavailable for the following trade(s):
- ☐ Other: _____

Was the Jefferson County DBE Office contacted for assistance in locating DBEs? ☐ Yes ☐ No

PART III: DISCLOSURE OF OTHER "NON-DBE" SUBCONTRACTS

The Bidder shall use this area to provide a listing of all "Non-DBE" Subcontractors, including suppliers, that will perform under this project. A list of those "Non-DBE" Subcontractors the Bidder selects, after bid submission, shall be provided to the Purchasing Office not later than five (5) calendar days after being notified that Bidder is the apparent low Bidder. A list of those "Non-DBE" Subcontractors that are selected after contract award must be provided **immediately** after their selection.

Subcontractor Name: _____

Address: _____
Street City State Zip

Contact person: _____ Title: _____

Phone (with area code): _____ Fax (with area code): _____

Proposed Subcontract Amount: $ _____ Percentage of Prime Contract: _____ %

Description of Subcontract Work to be Performed: _____

Subcontractor Name: _____

Address: _____
Street City State Zip

Contact person: _____ Title: _____

Phone (with area code): _____ Fax (with area code): _____

Proposed Subcontract Amount: $ _____ Percentage of Prime Contract: _____ %

Description of Subcontract Work to be Performed: _____

REQUIRED FORM
<u>Bidder</u>: Please complete this form and include with bid submission.

DISADVANTAGED BUSINESS ENTERPRISE (DBE)
SUBCONTRACTING PARTICIPATION DECLARATION FORM

Subcontractor Name: _____

Address: _____
Street City State Zip

Contact person: _____ Title: _____

Phone (with area code): _____ Fax (with area code): _____

Proposed Subcontract Amount: $ _____ Percentage of Prime Contract: _____ %

Description of Subcontract Work to be Performed: _____

Subcontractor Name: _____

Address: _____
Street City State Zip

Contact person: _____ Title: _____

Phone (with area code): _____ Fax (with area code): _____

Proposed Subcontract Amount: $ _____ Percentage of Prime Contract: _____ %

Description of Subcontract Work to be Performed: _____

I hereby certify that I have read the *DBE Program Instructions and Information*, truthfully completed all applicable parts of this form, and **attached any necessary support documentation as required**. I fully understand that intentionally falsifying information on this document may result in my not receiving a contract award or termination of any resulting contract.

Name (print or type): _____

Title: _____

Signature: _____

Date: _____

E-mail address: _____

Contact person that will be in charge of invoicing for this project:

Name (print or type): _____

Title: _____

Date: _____

E-mail address: _____

REQUIRED FORM
<u>Bidder</u>: Please complete this form and include with bid submission.

RESIDENCE CERTIFICATION/TAX FORM

Pursuant to Texas Government Code §2252.001 *et seq*., as amended, Jefferson County requests Resident Certification. §2252.001 *et seq*. of the Government Code provides some restrictions on the awarding of governmental contracts; pertinent provisions of §2252.001 are stated below:

(3) "Non-resident Bidder" refers to a person who is not a resident.

(4) "Resident Bidder" refers to a person whose principal place of business is in this state, including a contractor whose ultimate parent company or majority owner has its principal place of business in this state.

☐ I certify that _____ [company name] is a Resident Bidder of Texas as defined in Government Code §2252.001.

☐ I certify that _____ [company name] is a Nonresident Bidder as defined in Government Code §2252.001 and our principal place of business is _____ _____ (city and state).

Taxpayer Identification Number (T.I.N.):	
Company Name submitting bid/proposal:	
Mailing address:	
If you are an individual, list the names and addresses of any partnership of which you are a general partner:	

Property: List all taxable property owned by you or above partnerships in Jefferson County.

Jefferson County Tax Acct. No.*	Property address or location**

* This is the property amount identification number assigned by the Jefferson County Appraisal District.

** For real property, specify the property address or legal description. For business property, specify the address where the property is located. For example, office equipment will normally be at your office, but inventory may be stored as a warehouse or other location.

REQUIRED FORM
<u>Bidder</u>: Please complete this form and include with bid submission.

HOUSE BILL 89 VERIFICATION

I, _____, the undersigned representative of (company or business name)_____ (heretofore referred to as company) being an adult over the age of eighteen (18) years of age, after being duly sworn by the undersigned notary, do hereby depose and verify under oath that the company named above, under the provisions of Subtitle F, Title 10, Government Code Chapter 2270:

1. Does not boycott Israel currently; and
2. Will not boycott Israel during the term of the contract.

Pursuant to Section 2270.002, Texas Government Code:

1. "**Boycott Israel**" means refusing to deal with, terminating business activities with, or otherwise taking any action that is intended to penalize, inflict economic harm on, or limit commercial relations specifically with Israel, or with a person or entity doing business in Israel or in an Israeli-controlled territory, but does not include an action made ordinary business purposes; and

2. "**Company**" means a for-profit sole proprietorship, organization, association, corporation, partnership, joint venture, limited partnership, limited liability partnership, or an limited liability company, including a wholly owned subsidiary, majority-owned subsidiary, parent company or affiliate of those entities or business association that exist to make a profit.

_____
Signature of Company Representative

_____
Date

On this _____ day of _____, 20____, personally appeared

_____, the above-named person, who after by me being duly sworn, did swear and confirm that the above is true and correct.

Notary Seal

_____
Notary Signature

_____
Date

REQUIRED FORM
<u>Bidder</u>: Please complete this form and include with bid submission.

SENATE BILL 252 CERTIFICATION

On this day, I, Deborah L. Clark, Purchasing Agent for Jefferson County, Texas, pursuant to Texas Government Code, Chapter 2252, Section 2252.152 and Section 2252.153, certify that I did review the website of the Comptroller of the State of Texas concerning the listing of companies that is identified under Section 806.051, Section 807.051, or Section 2253.253 and I have ascertained that the below named company is not contained on said listing of companies which do business with Iran, Sudan, or any Foreign Terrorist Organization.

_____

Company Name

_____

IFB/RFP/RFQ number

Certification check performed by:

_____

Purchasing Representative

_____

Date

BID AFFIDAVIT

The undersigned certifies that the bid prices contained in this bid have been carefully reviewed and are submitted as correct and final. Bidder further certifies and agrees to furnish any and/or all commodities upon which prices are extended at the price offered, and upon the conditions contained in the specifications and the Notice to Bidders.

STATE OF_____ COUNTY OF_____

BEFORE ME, the undersigned authority, a Notary Public in and for the State of _____,

on this day personally appeared _____, who
(name)
after being by me duly sworn, did depose and say:

"I, _____ am a duly authorized officer of/agent
(name)
for _____ and have been duly authorized to execute the
(name of firm)
foregoing on behalf of the said_____.
(name of firm)

I hereby certify that the foregoing bid has not been prepared in collusion with any other Bidder or other person or persons engaged in the same line of business prior to the official opening of this bid. Further, I certify that the Bidder is not now, nor has been for the past six (6) months, directly or indirectly concerned in any pool or agreement or combination, to control the price of services/commodities bid on, or to influence any person or persons to bid or not to bid thereon."

Name and address of Bidder:_____

_____

Fax: _____ Telephone#_____

by: _____ Title:_____
(print name)

Signature:_____

SUBSCRIBED AND SWORN to before me by the above-named

_____ on

this the _____ day of_____, 20___.

_____
Notary Public in and for
the State of _____

REQUIRED FORM
<u>Bidder</u>: Please complete this form and include with bid submission.

TECHNICAL SPECIFICATIONS

Volume One

MECHANICAL, ELECTRICAL, & PLUMBING MANUAL

JACK BROOKS
REGIONAL AIRPORT

Jefferson County Regional Airport
Main Terminal HVAC

Beaumont, TX

STATE OF TEXAS
MATTHEW A FLUKINGER
119970
LICENSED
PROFESSIONAL ENGINEER

12-JAN-2023

SIGMAENGINEERS
Innovative Solutions | Solid Designs

SEI Project No.22-413
January, 2023
Set No. _____

22-413 Jefferson County Regional
Airport Main Terminal HVAC

TITLE SHEET 1

TABLE OF CONTENTS 1-1

VOLUME ONE

DIVISION 23 – HEATING, VENTILATION, AND AIR CONDITIONING (HVAC)

Section 23 05 00 – Common Work Results for HVAC 1-17
Section 23 05 13 - Common Motor Requirements for HVAC Equipment 1-3
Section 23 05 19 - Meters and Gages for HVAC Piping 1-7
Section 23 05 23 - General-Duty Valves for HVAC Plumbing 1-10
Section 23 05 29 - Hangers and Supports for HVAC Piping and Equipment 1-6
Section 23 05 48 - Vibration Controls for HVAC Piping and 1-3
Equipment Section 23 05 50 - Variable-Frequency Motor Controllers 1-7
Section 23 05 53 - Identification for HVAC Piping and Equipment 1-6
Section 23 05 93 - Testing, Adjusting and Balancing for HVAC 1-3
Section 23 06 20 - Hydronic Specialties 1-5
Section 23 07 00 - HVAC Insulation 1-4
Section 23 09 23 - Direct Digital Control (DDC) System for HVAC 1-16
Section 23 21 13 - Hydronic Piping 1-12
Section 23 21 23 - Hydronic Pumps 1-7
Section 23 25 00 - HVAC Water Treatment 1-3
Section 23 52 33 - Water-Tube Boilers 1-8
Section 23 64 23 - Air-Cooled, Scroll Water Chillers 1-10
Section 23 73 13 - Modular Central Station Air Handling Units 1-7

DIVISION 26 - ELECTRICAL

Section 26 05 26 - Grounding and Bonding for Electrical System 1-7
Section 26 05 29 - Hangers and Supports for Electrical Systems 1-7
Section 26 05 33 - Raceway and Boxes for Electrical Systems 1-13
Section 26 05 53 - Identification for Electrical Systems 1-9
Section 26 11 00 - Fire Stopping 1-3
Section 26 22 00 - Low-Voltage Transformers 1-7
Section 26 27 26 - Wiring Devices 1-13
Section 26 28 13 - Fuses 1-4
Section 26 28 16 - Enclosed Switches and Circuit Breakers 1-8
Section 26 29 13 - Enclosed Controllers 1-10
Section 26 95 00 - Field Electrical Testing 1-4

END OF TABLE OF CONTENTS

SECTION 230500 - COMMON WORK RESULTS FOR HVAC

PART 1 - GENERAL

RELATED DOCUMENTS

Drawings and general provisions of the Contract, including General and Supplementary Conditions and Division 01 Specification Sections, apply to this Section.

SUMMARY

This Section includes the following:
- Piping materials and installation instructions common to most piping systems.
- Transition fittings.
- Dielectric fittings.
- Mechanical sleeve seals.
- Sleeves.
- Escutcheons.
- Grout.
- HVAC demolition.
- Equipment installation requirements common to equipment sections.
- Painting and finishing.
- Concrete bases.
- Supports and anchorages.

DEFINITIONS

Finished Spaces: Spaces other than mechanical and electrical equipment rooms, furred spaces, pipe and duct chases, unheated spaces immediately below roof, spaces above ceilings, unexcavated spaces, crawlspaces, and tunnels.

Exposed, Interior Installations: Exposed to view indoors. Examples include finished occupied spaces and mechanical equipment rooms.

Exposed, Exterior Installations: Exposed to view outdoors or subject to outdoor ambient temperatures and weather conditions. Examples include rooftop locations.

Concealed, Interior Installations: Concealed from view and protected from physical contact by building occupants. Examples include above ceilings and chases.

Concealed, Exterior Installations: Concealed from view and protected from weather conditions and physical contact by building occupants but subject to outdoor ambient temperatures. Examples include installations within unheated shelters.

The following are industry abbreviations for plastic materials:
- CPVC: Chlorinated polyvinyl chloride plastic.
- PE: Polyethylene plastic.
- PVC: Polyvinyl chloride plastic.

The following are industry abbreviations for rubber materials:
- EPDM: Ethylene-propylene-diene terpolymer rubber.
- NBR: Acrylonitrile-butadiene rubber.

SUBMITTALS

Product Data: For the following:
Transition fittings.
Dielectric fittings.
Mechanical sleeve seals.
Escutcheons.

Welding certificates.

QUALITY ASSURANCE

Steel Support Welding: Qualify processes and operators according to AWS D1.1, "Structural Welding Code--Steel."

Steel Pipe Welding: Qualify processes and operators according to ASME Boiler and Pressure Vessel Code: Section IX, "Welding and Brazing Qualifications."
Comply with provisions in ASME B31 Series, "Code for Pressure Piping."
Certify that each welder has passed AWS qualification tests for welding processes involved and that certification is current.

Electrical Characteristics for HVAC Equipment: Equipment of higher electrical characteristics may be furnished provided such proposed equipment is approved in writing and connecting electrical services, circuit breakers, and conduit sizes are appropriately modified. If minimum energy ratings or efficiencies are specified, equipment shall comply with requirements.

DELIVERY, STORAGE, AND HANDLING

Deliver pipes and tubes with factory-applied end caps. Maintain end caps through shipping, storage, and handling to prevent pipe end damage and to prevent entrance of dirt, debris, and moisture.

Store plastic pipes protected from direct sunlight. Support to prevent sagging and bending.

COORDINATION

Arrange for pipe spaces, chases, slots, and openings in building structure during progress of construction, to allow for HVAC installations.

Coordinate installation of required supporting devices and set sleeves in poured-in-place concrete and other structural components as they are constructed.

Coordinate requirements for access panels and doors for HVAC items requiring access that are concealed behind finished surfaces. Access panels and doors are specified in Division 08 Section "Access Doors and Frames."

Prepare Coordination / Installation Shop drawings to a scale of 1/4"=1'-0" or larger; detailing major elements, components, and systems of mechanical equipment and materials in relationship with other systems, installations, and building components. Indicate locations where space is limited for installation and access and where sequencing and coordination of installations are of importance to the efficient flow of the Work, including (but not necessarily limited to) the following:
Structural floor, wall and roof opening sizes and details.

Clearances for installing and maintaining insulation.
Locations of light fixtures and sprinkler heads.
Clearances for servicing and maintaining equipment, including tube removal, filter removal, and space for equipment disassembly required for periodic maintenance.
Equipment connections and support details.
Exterior wall and foundation penetrations.
Routing of sanitary sewer piping.
Fire-rated wall and floor penetrations.
Sizes and location of required concrete pads and bases.
Valve stem movement.

PART 2 - PRODUCTS

SCOPE OF SERVICES

Base bid includes Mechanical (HVAC), and Plumbing work as shown and described in the contract documents. Work will have to be done in a staged manner to allow continuous use of the balance of the facility by the building occupants. Refer to architectural staging criteria.

This Division requires the furnishing and installing of all items Specified herein, indicated on the Drawings or reasonably inferred as necessary for safe and proper operation; including every article, device or accessory (whether or not specifically called for by item) reasonably necessary to facilitate each system's functioning as indicated by the design and the equipment specified. Elements of the work include, but are not limited to, materials, labor, supervision, transportation, storage, equipment, utilities, all required permits, licenses and inspections. All work performed under this Section shall be in accordance with the Project Manual, Drawings and Specifications and is subject to the terms and conditions of the Contract.

The approximate locations of Mechanical (HVAC) and Plumbing items are indicated on the Drawings. These Drawings are not intended to give complete and accurate details in regard to location of outlets, apparatus, etc. Exact locations are to be determined by actual measurements at the building, and will in all cases be subject to the Review of the Owner or Engineer, who reserves the right to make any reasonable changes in the locations indicated without additional cost to the Owner.

Items specifically mentioned in the Specifications but not shown on the Drawings and/or items shown on Drawings but not specifically mentioned in the Specifications shall be installed by the Contractor under the appropriate section of work as if they were both specified and shown.

All discrepancies between the Contract Documents and actual job-site conditions shall be reported to the Project Manager or Engineer so that they will be resolved prior to the bidding, where this cannot be done at least 7 working days prior to bid; the greater or more costly of the discrepancy shall be bid. All labor and materials required to perform the work described shall be included as part of this Contract.

It is the intention of this Section of the Specifications to outline minimum requirements to furnish the Owner with a turn-key and fully operating system in cooperation with other trades.

APPILCABLE CODES

Obtain all required permits and inspections for all work required by the Contract Documents and pay all required fees in connection thereof.

Arrange with the serving utility companies for the connection of all required utilities and pay all charges, meter charges, connection fees and inspection fees, if required.

Comply with all applicable codes, specifications, local ordinances, industry standards, utility company regulations and the applicable requirements of the following nationally accepted codes and standards:

Underwriters' Laboratories, Inc., UL.
Air Moving & Conditioning Association, AMCA.
American Standards Association, ASA.
American Society of Heating, Refrigerating, and Air-Conditioning Engineers, Inc., ASHRAE.
American Society of Mechanical Engineers, ASME.
American Society of Plumbing Engineers, ASPE.
American Society of Testing Materials, ASTM.
American Water Works Association, AWWA.
International Energy Conservation Code, IECC 2015
National Bureau of Standards, NBS.
National Fire Protection Association, NFPA.
Sheet Metal & Air Conditioning Contractors' National Association, SMACNA.

Where differences existing between the Contract Documents and applicable state or city building codes, state and local ordinances, industry standards, utility company regulations and the applicable requirements of the above listed nationally accepted codes and standards, the more stringent or costly application shall govern. Promptly notify the Engineer in writing of all differences.

When directed in writing by the Engineer, remove all work installed that does not comply with the Contract Documents and applicable state or city building codes, state and local ordinances, industry standards, utility company regulations and the applicable requirements of the above listed nationally accepted codes and standards, correct the deficiencies, and complete the work at no additional cost to the Owner.

DRAWINGS & SPECIFICATIONS

These Specifications are intended to supplement the Drawings and it will not be the province of the Specifications to mention any part of the work which the Drawings are competent to fully explain in every particular and such omission is not to relieve the Contractor from carrying out portions indicated on the Drawings only.

Should items be required by these Specifications and not indicated on the Drawings, they are to be supplied even if of such nature that they could have been indicated thereon. In case of disagreement between Drawings and Specifications, or within either Drawings or Specifications, the better quality or greater quantity of work shall be estimated and the matter referred to the Architect or Engineer for review with a request for information and clarification at least 7 working days prior to bid opening date for issuance of an addendum.

The listing of product manufacturers, materials and methods in the various sections of the Specifications, and indicated on the Drawings, is intended to establish a standard of

quality only. It is not the intention of the Owner or Engineer to discriminate against any product, material or method that is equal to the standards as indicated and/or specified, nor is it intended to preclude open, competitive bidding. The fact that a specific manufacturer is listed as an acceptable manufacturer should not be interpreted to mean that the manufacturers' standard product will meet the requirements of the project design, Drawings, Specifications and space constraints.

The Architect or Engineer and Owner shall be the sole judge of quality and equivalence of equipment, materials and methods.

Products by other reliable manufacturers, other materials, and other methods, will be accepted as outlined, provided they have equal capacity, construction, and performance. However, under no circumstances shall any substitution by made without the written permission of the Architect or Engineer and Owner. Request for prior approval must be made in writing 10 days prior to the bid date with out fail.

Wherever a definite product, material or method is specified and there is not a statement that another product, material or method will be acceptable, it is the intention of the Owner or Engineer that the specified product, material or method is the only one that shall be used without prior approval.

Wherever a definite material or manufacturer's product is specified and the Specification states that products of similar design and equal construction from the specified list of manufacturers may be substituted, it is the intention of the Owner or Engineer that products of manufacturers that are specified are the only products that will be acceptable and that products of other manufacturers will not be considered for substitution without approval.

Wherever a definite product, material or method is specified and there is a statement that "OR EQUAL" product, material or method will be acceptable, it is the intention of the Owner or Engineer that the specified product, material or method or an "OR EQUAL" product, material or method may be used if it complies with the specifications and is submitted for review to the Engineer as outline herein. Where permission to use substituted or alternative equipment on the project is granted by the Owner or Engineer in writing, it shall be the responsibility of the Contractor or Subcontractor involved to verify that the equipment will fit in the space available which includes allowances for all required Code and maintenance clearances, and to coordinate all equipment structural support, plumbing and electrical requirements and provisions with the Mechanical (HVAC) and Plumbing Design Documents and all other trades.

Coordinate with Division 1 requirements for substitution, unless noted otherwise the Contractors wishing to substitute products, materials or methods from those indicated or specified, shall submit such requests to the Owner or Engineer in writing and within THIRTY (30) WORKING DAYS OF NOTIFICATION OF CONTRACT AWARD. Requests for permission to utilize alternates or substitutions will not be considered after that time, unless the Specified item is unavailable or will adversely effect to completion of the Project. Claims submitted for consideration will require notarized letters from all parties involved and will be considered only if the Contractor has been timely in his delivery for review of all required equipment and material submittals. Owner or Engineer will investigate such requests for substitution and if acceptable will issue a letter allowing the substitution.

If any request for a substitution of product, material or method is rejected, the Contractor will automatically be required to furnish the product, material or method named in the Specifications. Repetitive requests for substitutions will not be considered.

Requests shall be bound and shall consist of three (3) sets of descriptive literature and performance data covering each item of equipment or material. The submittal shall include the following:

Name of the individuals or company originating the submittal.
Name of the project for which the submittal is made.
An index page of the items submitted.
A written list of variations between the specified product and the submitted product.
Sufficient information, including scaled drawing of area and equipment involved at a scale of 1/4" = 1'-0" minimum, as required to demonstrate that the alternate or substituted product will fit in the space available.
Identification of each item of material or equipment matching that indicated on the Drawings. All applicable industry or national Listings, Labels, Approvals and Standards shall be clearly indicated.
Sufficient pictorial, descriptive and diagrammatic data on each item to show its conformance with the Drawings and Specifications. Any options or special requirements shall be so indicated. All non-applicable information shall be crossed out.
Provide upon request of the Owner or Engineer, samples of materials and/or equipment as may be required.

The Owner or Engineer will investigate all requests for substitutions when submitted in accordance with above and if accepted, will issue a letter allowing the substitutions. The Engineer shall be the sole authority to approve or disapprove any and all substitutions.

Where equipment other than that used in the design as specified or shown on the Drawings is substituted (either from an approved manufacturers list or by submittal review), it shall be the responsibility of the substituting Contractor to coordinate space requirements, building provisions and connection requirements with his trades and all other trades and pay all additional costs to other trades, the Owner, the Architect or Engineer, if any, due to the substitutions.

RECORD DOCEMENTS

Prepare record documents in accordance with the requirements in Special Project Requirements, in addition to the requirements specified in Division 15, indicate the following installed conditions.

Duct mains and branches, size and location, for both exterior and interior; locations of dampers, fire dampers, duct access panels, and other control devices; filters, fuel fired heaters, fan coils, condensing units, and roof-top A/C units requiring periodic maintenance or repair.
Mains and branches of piping systems, with valves and control devices located and numbered, concealed unions located, and with items requiring maintenance located (i.e., traps, strainers, expansion compensators, tanks, etc.). Valve location diagrams, complete with valve tag chart. Indicate actual inverts and horizontal locations of underground piping.
Equipment locations (exposed and concealed), dimensioned from prominent building lines.

Approved substitutions, Contract Modifications, and actual equipment and materials installed.
Contract Modifications, actual equipment and materials installed.

The Contractor shall maintain a set of clearly marked black line record "AS-BUILT" prints on the job site on which he shall mark all work details, alterations to meet site conditions and changes made by "Change Order" notices. These shall be kept available for inspection by the Owner, Architect or Engineer at all times.

Refer to Division 1 for additional requirements concerning record drawings. If the Contractor does not keep an accurate set of as-built drawings, the pay request may be altered or delayed at the request of the Architect. Mark the drawings with a colored pencil. Delivery of as-built prints and re-producible is a condition of final acceptance.

The record prints shall be updated on a daily basis and shall indicate accurate dimensions for all buried or concealed work, precise locations of all concealed pipe or duct, locations of all concealed valves, controls and devices and any deviations from the work shown on the Construction Documents which are required for coordination. All dimensions shall include at least two dimensions to permanent structure points.

At the Engineer's option, the Contractor shall transfer all data from the record "AS-BUILT" prints to an electronic media such as AutoCAD release 2007, in order to plot the reproducible media "AS-BUILT" drawings. Since data stored on electronic media can deteriorate undetected or be modified without the Engineer's knowledge, the AutoCAD electronic drawing files are provided without warranty or obligation on the part of the Engineer as to accuracy or information contained in the files. All information in the files shall be independently verified by the user. Any user shall agree to indemnify and hold the Engineer harmless from any and all claims, damages, losses, and expenses including but not limited to Attorney's fees arising out of the use of the AutoCAD drawing files. Engineer shall furnish to the Contractor electronic media files of Contract Documents for the Contractor to use for inputting of the data from the record "AS-BUILT" prints and the Contractor shall return the revised electronic files on CD ROM properly labeled to the Engineer and shall submit the plotted reproducible drawings and three (3) sets of black line prints to the Architect or Engineer for review prior to scheduling the final inspection at the completion of the work. The reproducible record "AS-BUILT" drawings shall have the Engineers Name and Seal removed or blanked out and shall be clearly marked and signed on each sheet as described in paragraph F. below.

of the work, the Contractor shall transfer all marks from the submit a set of clear concise set of reproducible record "AS-BUILT" drawings and shall submit the reproducible drawings with corrections made by a competent draftsman and three (3) sets of black line prints to the Architect or Engineer for review prior to scheduling the final inspection at the completion of the work. The reproducible record "AS-BUILT" drawings shall have the Engineers Name and Seal removed or blanked out and shall be clearly marked and signed on each sheet.

PIPE, TUBE, AND FITTINGS

Refer to individual Division 23 piping Sections for pipe, tube, and fitting materials and joining methods.

Pipe Threads: ASME B1.20.1 for factory-threaded pipe and pipe fittings.

JOINING MATERIALS

Refer to individual Division 23 piping Sections for special joining materials not listed below.

Pipe-Flange Gasket Materials: Suitable for chemical and thermal conditions of piping system contents.

ASME B16.21, nonmetallic, flat, asbestos-free, 1/8-inch maximum thickness unless thickness or specific material is indicated.

Full-Face Type: For flat-face, Class 125, cast-iron and cast-bronze flanges.

Narrow-Face Type: For raised-face, Class 250, cast-iron and steel flanges.

AWWA C110, rubber, flat face, 1/8 inch thick, unless otherwise indicated; and full-face or ring type, unless otherwise indicated.

Flange Bolts and Nuts: ASME B18.2.1, carbon steel, unless otherwise indicated.

Plastic, Pipe-Flange Gasket, Bolts, and Nuts: Type and material recommended by piping system manufacturer, unless otherwise indicated.

Solder Filler Metals: ASTM B 32, lead-free alloys. Include water-flushable flux according to ASTM B 813.

Brazing Filler Metals: AWS A5.8, BCuP Series, copper-phosphorus alloys for general-duty brazing, unless otherwise indicated; and AWS A5.8, BAg1, silver alloy for refrigerant piping, unless otherwise indicated.

Welding Filler Metals: Comply with AWS D10.12 for welding materials appropriate for wall thickness and chemical analysis of steel pipe being welded.

Solvent Cements for Joining Plastic Piping:

CPVC Piping: ASTM F 493.

PVC Piping: ASTM D 2564. Include primer according to ASTM F 656.

Fiberglass Pipe Adhesive: As furnished or recommended by pipe manufacturer.

TRANSITION FITTINGS

Plastic-to-Metal Transition Fittings: PVC one-piece fitting with manufacturer's Schedule 80 equivalent dimensions; one end with threaded brass insert, and one solvent-cement-joint end.

Manufacturers:

Eslon Thermoplastics.

Plastic-to-Metal Transition Adaptors: One-piece fitting with manufacturer's SDR 11 equivalent dimensions; one end with threaded brass insert, and one solvent-cement-joint end.

Manufacturers:

Thompson Plastics, Inc.

Plastic-to-Metal Transition Unions: MSS SP-107, PVC four-part union. Include brass end, solvent-cement-joint end, rubber O-ring, and union nut.

Manufacturers:

NIBCO INC.

NIBCO, Inc.; Chemtrol Div.

22-413 Jefferson County Regional
Airport Main Terminal HVAC

DIELECTRIC FITTINGS

Description: Combination fitting of copper alloy and ferrous materials with threaded, solder-joint, plain, or weld-neck end connections that match piping system materials.

Insulating Material: Suitable for system fluid, pressure, and temperature.

Dielectric Unions: Factory-fabricated, union assembly, for 250-psig minimum working pressure at 180 deg F.

Manufacturers:

Capitol Manufacturing Co.

Central Plastics Company.

Eclipse, Inc.

Epco Sales, Inc.

Hart Industries, International, Inc.

Watts Industries, Inc.; Water Products Div.

Zurn Industries, Inc.; Wilkins Div.

Dielectric Flanges: Factory-fabricated, companion-flange assembly, for 150- or 300-psig minimum working pressure as required to suit system pressures.

Manufacturers:

Capitol Manufacturing Co.

Central Plastics Company.

Epco Sales, Inc.

Watts Industries, Inc.; Water Products Div.

Dielectric-Flange Kits: Companion-flange assembly for field assembly. Include flanges, full-face- or ring-type neoprene or phenolic gasket, phenolic or polyethylene bolt sleeves, phenolic washers, and steel backing washers.

Manufacturers:

Advance Products & Systems, Inc.

Calpico, Inc.

Central Plastics Company.

Pipeline Seal and Insulator, Inc.

Separate companion flanges and steel bolts and nuts shall have 150- or 300-psig minimum working pressure where required to suit system pressures.

Dielectric Couplings: Galvanized-steel coupling with inert and noncorrosive, thermoplastic lining; threaded ends; and 300-psig minimum working pressure at 225 deg F.

Manufacturers:

Calpico, Inc.

Lochinvar Corp.

Dielectric Nipples: Electroplated steel nipple with inert and noncorrosive, thermoplastic lining; plain, threaded, or grooved ends; and 300-psig minimum working pressure at 225 deg F.

Manufacturers:

Perfection Corp.

Precision Plumbing Products, Inc.

Sioux Chief Manufacturing Co., Inc.

Victaulic Co. of America.

MECHANICAL SLEEVE SEALS

Description: Modular sealing element unit, designed for field assembly, to fill annular space between pipe and sleeve.

Manufacturers:

Advance Products & Systems, Inc.

Calpico, Inc.

Metraflex Co.

Pipeline Seal and Insulator, Inc.

Sealing Elements: EPDM interlocking links shaped to fit surface of pipe. Include type and number required for pipe material and size of pipe.

Pressure Plates: Plastic Carbon steel Stainless steel. Include two for each sealing element.

Connecting Bolts and Nuts: Carbon steel with corrosion-resistant coating of length required to secure pressure plates to sealing elements. Include one for each sealing element.

SLEEVES

Galvanized-Steel Sheet: 0.0239-inch minimum thickness; round tube closed with welded longitudinal joint.

Steel Pipe: ASTM A 53, Type E, Grade B, Schedule 40, galvanized, plain ends.

Cast Iron: Cast or fabricated "wall pipe" equivalent to ductile-iron pressure pipe, with plain ends and integral waterstop, unless otherwise indicated.

Stack Sleeve Fittings: Manufactured, cast-iron sleeve with integral clamping flange. Include clamping ring and bolts and nuts for membrane flashing.

Underdeck Clamp: Clamping ring with set screws.

Molded PVC: Permanent, with nailing flange for attaching to wooden forms.

PVC Pipe: ASTM D 1785, Schedule 40.

Molded PE: Reusable, PE, tapered-cup shaped, and smooth-outer surface with nailing flange for attaching to wooden forms.

ESCUTCHEONS

Description: Manufactured wall and ceiling escutcheons and floor plates, with an ID to closely fit around pipe, tube, and insulation of insulated piping and an OD that completely covers opening.

One-Piece, Deep-Pattern Type: Deep-drawn, box-shaped brass with polished chrome-plated finish.

One-Piece, Cast-Brass Type: With set screw.
Finish: Polished chrome-plated.

Split-Casting, Cast-Brass Type: With concealed hinge and set screw.
Finish: Polished chrome-plated.

One-Piece, Stamped-Steel Type: With set screw and chrome-plated finish.

Split-Plate, Stamped-Steel Type: With concealed set screw or spring clips, and chrome-plated finish.

One-Piece, Floor-Plate Type: Cast-iron floor plate.

Split-Casting, Floor-Plate Type: Cast brass with concealed hinge and set screw.

GROUT & FOUNDATION

Description: ASTM C 1107, Grade B, nonshrink and nonmetallic, dry hydraulic-cement grout.
Characteristics: Post-hardening, volume-adjusting, nonstaining, noncorrosive, nongaseous, and recommended for interior and exterior applications.
Design Mix: 5000-psi, 28-day compressive strength.
Packaging: Premixed and factory packaged.

Foundations and pads shall be constructed of reinforced concrete and shall be sized and reinforced as noted or detailed on the Drawings. As a minimum, pads shall be 6" thick, by width and length as required by item it is under, reinforced with 6 x 6 W2.9 x W2.9 Welded Wire mesh.

Support attachments, unless otherwise noted on shown, shall be securely attached to the items foundation, pad or building structure, per manufacturers recommendations and shall be approved by the Architect.

PART 3 - EXECUTION

HVAC DEMOLITION

Refer to Division 01 Section "Cutting and Patching" and Division 02 Section "Selective Structure Demolition" for general demolition requirements and procedures.

Disconnect, demolish, and remove HVAC systems, equipment, and components indicated to be removed.
Piping to Be Removed: Remove portion of piping indicated to be removed and cap or plug remaining piping with same or compatible piping material.
Piping to Be Abandoned in Place: Drain piping and cap or plug piping with same or compatible piping material.

Ducts to Be Removed: Remove portion of ducts indicated to be removed and plug remaining ducts with same or compatible ductwork material.
Ducts to Be Abandoned in Place: Cap or plug ducts with same or compatible ductwork material.
Equipment to Be Removed: Disconnect and cap services and remove equipment.
Equipment to Be Removed and Reinstalled: Disconnect and cap services and remove, clean, and store equipment; when appropriate, reinstall, reconnect, and make equipment operational.
Equipment to Be Removed and Salvaged: Disconnect and cap services and remove equipment and deliver to Owner.

If pipe, insulation, or equipment to remain is damaged in appearance or is unserviceable, remove damaged or unserviceable portions and replace with new products of equal capacity and quality.

PIPING SYSTEMS - COMMON REQUIREMENTS

Install piping according to the following requirements and Division 23 Sections specifying piping systems.

Drawing plans, schematics, and diagrams indicate general location and arrangement of piping systems. Indicated locations and arrangements were used to size pipe and calculate friction loss, expansion, pump sizing, and other design considerations. Install piping as indicated unless deviations to layout are approved on Coordination Drawings.

Install piping in concealed locations, unless otherwise indicated and except in equipment rooms and service areas.

Install piping indicated to be exposed and piping in equipment rooms and service areas at right angles or parallel to building walls. Diagonal runs are prohibited unless specifically indicated otherwise.

Install piping above accessible ceilings to allow sufficient space for ceiling panel removal.

Install piping to permit valve servicing.

Install piping at indicated slopes.

Install piping free of sags and bends.

Install fittings for changes in direction and branch connections.

Install piping to allow application of insulation.

Select system components with pressure rating equal to or greater than system operating pressure.

Install escutcheons for penetrations of walls, ceilings, and floors according to the following:

New Piping:

Piping with Fitting or Sleeve Protruding from Wall: One-piece, deep-pattern type.

Chrome-Plated Piping: One-piece, cast-brass type with polished chrome-plated finish.

Insulated Piping: One-piece, stamped-steel type with spring clips.

Bare Piping at Wall and Floor Penetrations in Finished Spaces: One-piece, cast-brass type with polished chrome-plated finish.

Bare Piping at Wall and Floor Penetrations in Finished Spaces: One-piece, stamped-steel type.

Bare Piping at Ceiling Penetrations in Finished Spaces: One-piece or split-casting, cast-brass type with polished chrome-plated finish.

Bare Piping at Ceiling Penetrations in Finished Spaces: Split-plate, stamped-steel type with concealed hinge and set screw.

Bare Piping in Unfinished Service Spaces: One-piece, cast-brass type with polished chrome-plated finish.

Bare Piping in Unfinished Service Spaces: One-piece, stamped-steel type with concealed or exposed-rivet hinge and set screw or spring clips.

Bare Piping in Equipment Rooms: One-piece, cast-brass type.

Bare Piping in Equipment Rooms: One-piece, stamped-steel type with set screw.

Bare Piping at Floor Penetrations in Equipment Rooms: One-piece, floor-plate type.

Existing Piping: Use the following:

Chrome-Plated Piping: Split-casting, cast-brass type with chrome-plated finish.

Insulated Piping: Split-plate, stamped-steel type with concealed or exposed-rivet hinge and spring clips.

Bare Piping at Wall and Floor Penetrations in Finished Spaces: Split-casting, cast-brass type with chrome-plated finish.

Bare Piping at Wall and Floor Penetrations in Finished Spaces: Split-plate, stamped-steel type with concealed hinge and spring clips.

Bare Piping at Ceiling Penetrations in Finished Spaces: Split-casting, cast-brass type with chrome-plated finish.

Bare Piping at Ceiling Penetrations in Finished Spaces: Split-plate, stamped-steel type with concealed hinge and set screw.

Bare Piping in Unfinished Service Spaces: Split-casting, cast-brass type with polished chrome-plated finish.

Bare Piping in Unfinished Service Spaces: Split-plate, stamped-steel type with concealed or exposed-rivet hinge and set screw or spring clips.

Bare Piping in Equipment Rooms: Split-casting, cast-brass type.

Bare Piping in Equipment Rooms: Split-plate, stamped-steel type with set screw or spring clips.

Bare Piping at Floor Penetrations in Equipment Rooms: Split-casting, floor-plate type.

Sleeves are not required for core-drilled holes.

22-413 Jefferson County Regional
Airport Main Terminal HVAC

Permanent sleeves are not required for holes formed by removable PE sleeves.

Install sleeves for pipes passing through concrete and masonry walls and concrete floor and roof slabs.

Install sleeves for pipes passing through concrete and masonry walls, gypsum-board partitions, and concrete floor and roof slabs.

Cut sleeves to length for mounting flush with both surfaces.

Exception: Extend sleeves installed in floors of mechanical equipment areas or other wet areas 2 inches above finished floor level. Extend cast-iron sleeve fittings below floor slab as required to secure clamping ring if ring is specified.

Install sleeves in new walls and slabs as new walls and slabs are constructed.

Install sleeves that are large enough to provide 1/4-inch annular clear space between sleeve and pipe or pipe insulation. Use the following sleeve materials:

Steel Pipe Sleeves: For pipes smaller than NPS 6.

Steel Sheet Sleeves: For pipes NPS 6 and larger, penetrating gypsum-board partitions.

Stack Sleeve Fittings: For pipes penetrating floors with membrane waterproofing. Secure flashing between clamping flanges. Install section of cast-iron soil pipe to extend sleeve to 2 inches above finished floor level. Refer to Division 07 Section "Sheet Metal Flashing and Trim" for flashing.

Seal space outside of sleeve fittings with grout.

Except for underground wall penetrations, seal annular space between sleeve and pipe or pipe insulation, using joint sealants appropriate for size, depth, and location of joint. Refer to Division 07 Section "Joint Sealants" for materials and installation.

Aboveground, Exterior-Wall Pipe Penetrations: Seal penetrations using sleeves and mechanical sleeve seals. Select sleeve size to allow for 1-inch annular clear space between pipe and sleeve for installing mechanical sleeve seals.

Install steel pipe for sleeves smaller than 6 inches in diameter.

Install cast-iron "wall pipes" for sleeves 6 inches and larger in diameter.

Mechanical Sleeve Seal Installation: Select type and number of sealing elements required for pipe material and size. Position pipe in center of sleeve. Assemble mechanical sleeve seals and install in annular space between pipe and sleeve. Tighten bolts against pressure plates that cause sealing elements to expand and make watertight seal.

Underground, Exterior-Wall Pipe Penetrations: Install cast-iron "wall pipes" for sleeves. Seal pipe penetrations using mechanical sleeve seals. Select sleeve size to allow for 1-inch annular clear space between pipe and sleeve for installing mechanical sleeve seals.

Mechanical Sleeve Seal Installation: Select type and number of sealing elements required for pipe material and size. Position pipe in center of sleeve. Assemble mechanical sleeve seals and install in annular space between pipe and sleeve. Tighten bolts against pressure plates that cause sealing elements to expand and make watertight seal.

Fire-Barrier Penetrations: Maintain indicated fire rating of walls, partitions, ceilings, and floors at pipe penetrations. Seal pipe penetrations with firestop materials. Refer to Division 07 Section "Penetration Firestopping" for materials.

Verify final equipment locations for roughing-in.

Refer to equipment specifications in other Sections of these Specifications for roughing-in requirements.

PIPING JOINT CONSTRUCTION

Join pipe and fittings according to the following requirements and Division 23 Sections specifying piping systems.

Ream ends of pipes and tubes and remove burrs. Bevel plain ends of steel pipe.

Remove scale, slag, dirt, and debris from inside and outside of pipe and fittings before assembly.

Soldered Joints: Apply ASTM B 813, water-flushable flux, unless otherwise indicated, to tube end. Construct joints according to ASTM B 828 or CDA's "Copper Tube Handbook," using lead-free solder alloy complying with ASTM B 32.

Brazed Joints: Construct joints according to AWS's "Brazing Handbook," "Pipe and Tube" Chapter, using copper-phosphorus brazing filler metal complying with AWS A5.8.

Threaded Joints: Thread pipe with tapered pipe threads according to ASME B1.20.1. Cut threads full and clean using sharp dies. Ream threaded pipe ends to remove burrs and restore full ID. Join pipe fittings and valves as follows:

Apply appropriate tape or thread compound to external pipe threads unless dry seal threading is specified.

Damaged Threads: Do not use pipe or pipe fittings with threads that are corroded or damaged. Do not use pipe sections that have cracked or open welds.

Welded Joints: Construct joints according to AWS D10.12, using qualified processes and welding operators according to Part 1 "Quality Assurance" Article.

Flanged Joints: Select appropriate gasket material, size, type, and thickness for service application. Install gasket concentrically positioned. Use suitable lubricants on bolt threads.

Plastic Piping Solvent-Cement Joints: Clean and dry joining surfaces. Join pipe and fittings according to the following:

Comply with ASTM F 402 for safe-handling practice of cleaners, primers, and solvent cements.

CPVC Piping: Join according to ASTM D 2846/D 2846M Appendix.

PVC Pressure Piping: Join schedule number ASTM D 1785, PVC pipe and PVC socket fittings according to ASTM D 2672. Join other-than-schedule-number PVC pipe and socket fittings according to ASTM D 2855.

PVC Nonpressure Piping: Join according to ASTM D 2855.

Plastic Pressure Piping Gasketed Joints: Join according to ASTM D 3139.

Plastic Nonpressure Piping Gasketed Joints: Join according to ASTM D 3212.

PE Piping Heat-Fusion Joints: Clean and dry joining surfaces by wiping with clean cloth or paper towels. Join according to ASTM D 2657.

Plain-End Pipe and Fittings: Use butt fusion.

Plain-End Pipe and Socket Fittings: Use socket fusion.

Fiberglass Bonded Joints: Prepare pipe ends and fittings, apply adhesive, and join according to pipe manufacturer's written instructions.

22-413 Jefferson County Regional
Airport Main Terminal HVAC

PIPING CONNECTIONS

Make connections according to the following, unless otherwise indicated:

Install unions, in piping NPS 2 and smaller, adjacent to each valve and at final connection to each piece of equipment.

Install flanges, in piping NPS 2-1/2 and larger, adjacent to flanged valves and at final connection to each piece of equipment.

Dry Piping Systems: Install dielectric unions and flanges to connect piping materials of dissimilar metals.

Wet Piping Systems: Install dielectric coupling and nipple fittings to connect piping materials of dissimilar metals.

EQUIPMENT INSTALLATION - COMMON REQUIREMENTS

Install equipment to allow maximum possible headroom unless specific mounting heights are not indicated.

Install equipment level and plumb, parallel and perpendicular to other building systems and components in exposed interior spaces, unless otherwise indicated.

Install HVAC equipment to facilitate service, maintenance, and repair or replacement of components. Connect equipment for ease of disconnecting, with minimum interference to other installations. Extend grease fittings to accessible locations.

Install equipment to allow right of way for piping installed at required slope.

PAINTING

Painting of HVAC systems, equipment, and components is specified in Division 09 Sections "Interior Painting" and "Exterior Painting."

Damage and Touchup: Repair marred and damaged factory-painted finishes with materials and procedures to match original factory finish.

CONCRETE BASES

Concrete Bases: Anchor equipment to concrete base according to equipment manufacturer's written instructions and according to seismic codes at Project.

Construct concrete bases of dimensions indicated, but not less than 4 inches larger in both directions than supported unit.

Install dowel rods to connect concrete base to concrete floor. Unless otherwise indicated, install dowel rods on 18-inch centers around the full perimeter of the base.

Install epoxy-coated anchor bolts for supported equipment that extend through concrete base, and anchor into structural concrete floor.

Place and secure anchorage devices. Use supported equipment manufacturer's setting drawings, templates, diagrams, instructions, and directions furnished with items to be embedded.

Install anchor bolts to elevations required for proper attachment to supported equipment.

Install anchor bolts according to anchor-bolt manufacturer's written instructions.

Use 3000-psi, 28-day compressive-strength concrete and reinforcement as specified in Division 03 Section "Cast-in-Place Concrete Miscellaneous Cast-in-Place Concrete."

22-413 Jefferson County Regional
Airport Main Terminal HVAC

ERECTION OF METAL SUPPORTS AND ANCHORAGES

Refer to Division 05 Section "Metal Fabrications" for structural steel.

Cut, fit, and place miscellaneous metal supports accurately in location, alignment, and elevation to support and anchor HVAC materials and equipment.

Field Welding: Comply with AWS D1.1.

ERECTION OF WOOD SUPPORTS AND ANCHORAGES

Cut, fit, and place wood grounds, nailers, blocking, and anchorages to support, and anchor HVAC materials and equipment.

Select fastener sizes that will not penetrate members if opposite side will be exposed to view or will receive finish materials. Tighten connections between members. Install fasteners without splitting wood members.

Attach to substrates as required to support applied loads.

GROUTING

Mix and install grout for HVAC equipment base bearing surfaces, pump and other equipment base plates, and anchors.

Clean surfaces that will come into contact with grout.

Provide forms as required for placement of grout.

Avoid air entrapment during placement of grout.

Place grout, completely filling equipment bases.

Place grout on concrete bases and provide smooth bearing surface for equipment.

Place grout around anchors.

Cure placed grout.

END OF SECTION

SECTION 230513 - COMMON MOTOR REQUIREMENTS FOR HVAC EQUIPMENT

PART 1 - GENERAL

SUMMARY

Section includes general requirements for single-phase and polyphase, general-purpose, horizontal, small and medium, squirrel-cage induction motors for use on alternating-current power systems up to 600 V and installed at equipment manufacturer's factory or shipped separately by equipment manufacturer for field installation.

COORDINATION

Coordinate features of motors, installed units, and accessory devices to be compatible with the following:

Motor controllers.
Torque, speed, and horsepower requirements of the load.
Ratings and characteristics of supply circuit and required control sequence.
Ambient and environmental conditions of installation location.

PART 2 - PRODUCTS

GENERAL MOTOR REQUIREMENTS

Comply with NEMA MG 1 unless otherwise indicated.

MOTOR CHARACTERISTICS

Duty: Continuous duty at ambient temperature of 40 deg C and at altitude of 3300 feet above sea level.

Capacity and Torque Characteristics: Sufficient to start, accelerate, and operate connected loads at designated speeds, at installed altitude and environment, with indicated operating sequence, and without exceeding nameplate ratings or considering service factor.

POLYPHASE MOTORS

Description: NEMA MG 1, Design B, medium induction motor.

Efficiency: Premium efficient, as defined in NEMA MG 1.

Service Factor: 1.15.

Multispeed Motors: Variable torque.

For motors with 2:1 speed ratio, consequent pole, single winding.
For motors with other than 2:1 speed ratio, separate winding for each speed.

Rotor: Random-wound, squirrel cage.

Bearings: Regreasable, shielded, antifriction ball bearings suitable for radial and thrust loading.

Temperature Rise: Match insulation rating.

Insulation: **Class F**

Code Letter Designation:

Motors **15** HP and Larger: NEMA starting Code F or Code G.
Motors Smaller Than **15** HP: Manufacturer's standard starting characteristic.

Enclosure Material: Cast iron for motor frame sizes **324T** and larger; rolled steel for motor frame sizes smaller than **324T**.

ADDITIONAL REQUIREMENTS FOR POLYPHASE MOTORS

Motors Used with Reduced-Voltage and Multispeed Controllers: Match wiring connection requirements for controller with required motor leads. Provide terminals in motor terminal box, suited to control method.

Motors Used with Variable-Frequency Controllers:

Windings: Copper magnet wire with moisture-resistant insulation varnish, designed and tested to resist transient spikes, high frequencies, and short time rise pulses produced by pulse-width-modulated inverters.
Premium-Efficient Motors: Class B temperature rise; Class F insulation.
Inverter-Duty Motors: Class F temperature rise; Class H insulation.
Thermal Protection: Comply with NEMA MG 1 requirements for thermally protected motors.

SINGLE-PHASE MOTORS

Motors larger than 1/20 hp shall be one of the following, to suit starting torque and requirements of specific motor application:

Permanent-split capacitor.
Split phase.
Capacitor start, inductor run.
Capacitor start, capacitor run.

Multispeed Motors: Variable-torque, permanent-split-capacitor type.

Bearings: Prelubricated, antifriction ball bearings or sleeve bearings suitable for radial and thrust loading.

Motors 1/20 HP and Smaller: Shaded-pole type.

Thermal Protection: Internal protection to automatically open power supply circuit to motor when winding temperature exceeds a safe value calibrated to temperature rating of motor insulation. Thermal-protection device shall automatically reset when motor temperature returns to normal range.

PART 3 - EXECUTION (NOT APPLICABLE)

END OF SECTION 230513

SECTION 230519 - METERS AND GAGES FOR HVAC PIPING

PART 1 - GENERAL

RELATED DOCUMENTS

Drawings and general provisions of the Contract, including General and Supplementary Conditions and Division 01 Specification Sections, apply to this Section.

SUMMARY

Section Includes:

Liquid-in-glass thermometers.
Thermowells.
Dial-type pressure gages.
Gage attachments.
Test plugs.
Test-plug kits.
Turbine flowmeters.

SUBMITTALS

Product Data: For each type of product indicated.

Wiring Diagrams: For power, signal, and control wiring.

Product Certificates: For each type of meter and gage, from manufacturer.

Operation and Maintenance Data: For meters and gages to include in operation and maintenance manuals.

PART 2 - PRODUCTS

LIQUID-IN-GLASS THERMOMETERS

Metal-Case, Compact-Style, Liquid-in-Glass Thermometers:

Manufacturers: Subject to compliance with requirements, provide products by one of the following:

Trerice, H. O. Co.

Standard: ASME B40.200.
Case: Cast aluminum; 6-inch nominal size.
Case Form: Back angle unless otherwise indicated.
Tube: Glass with magnifying lens and blue or red organic liquid.
Tube Background: Nonreflective aluminum with permanently etched scale markings graduated in deg F.
Window: Glass or plastic.
Stem: Aluminum or brass and of length to suit installation.

Design for Air-Duct Installation: With ventilated shroud.

Design for Thermowell Installation: Bare stem.

Connector: 3/4 inch, with ASME B1.1 screw threads.
Accuracy: Plus or minus 1 percent of scale range or one scale division, to a maximum of 1.5 percent of scale range.

Metal-Case, Industrial-Style, Liquid-in-Glass Thermometers:

Manufacturers: Subject to compliance with requirements, provide products by one of the following:

Flo Fab Inc.

Miljoco Corporation.

Palmer Wahl Instrumentation Group.

Tel-Tru Manufacturing Company.

Trerice, H. O. Co.

Weiss Instruments, Inc.

Winters Instruments - U.S.

Standard: ASME B40.200.
Case: Cast aluminum 9-inch nominal size unless otherwise indicated.
Case Form: Adjustable angle unless otherwise indicated.
Tube: Glass with magnifying lens and blue or red organic liquid.
Tube Background: Nonreflective aluminum with permanently etched scale markings graduated in deg F and deg C.
Window: Glass or plastic.
Stem: Aluminum and of length to suit installation.

Design for Air-Duct Installation: With ventilated shroud.

Design for Thermowell Installation: Bare stem.

Connector: 1-1/4 inches, with ASME B1.1 screw threads.
Accuracy: Plus or minus 1 percent of scale range or one scale division, to a maximum of 1.5 percent of scale range.

THERMOWELLS

Thermowells:

Standard: ASME B40.200.
Description: Pressure-tight, socket-type fitting made for insertion into piping tee fitting.
Material for Use with Copper Tubing: CNR.
Material for Use with Steel Piping: CSA.
Type: Stepped shank unless straight or tapered shank is indicated.
External Threads: NPS 1/2, NPS 3/4, or NPS 1, ASME B1.20.1 pipe threads.
Internal Threads: 1/2, 3/4, and 1 inch, with ASME B1.1 screw threads.
Bore: Diameter required to match thermometer bulb or stem.
Insertion Length: Length required to match thermometer bulb or stem.
Lagging Extension: Include on thermowells for insulated piping and tubing.
Bushings: For converting size of thermowell's internal screw thread to size of thermometer connection.

Heat-Transfer Medium: Mixture of graphite and glycerin.

PRESSURE GAGES

Direct-Mounted, Metal-Case, Dial-Type Pressure Gages:

Manufacturers: Subject to compliance with requirements, provide products by one of the following:

AMETEK, Inc.; U.S. Gauge.

Ashcroft Inc.

Ernst Flow Industries.

Flo Fab Inc.

Marsh Bellofram.

Miljoco Corporation.

Noshok.

Palmer Wahl Instrumentation Group.

REOTEMP Instrument Corporation.

Tel-Tru Manufacturing Company.

Trerice, H. O. Co.

Watts Regulator Co.; a div. of Watts Water Technologies, Inc.

Weiss Instruments, Inc.

WIKA Instrument Corporation - USA.

Winters Instruments - U.S.

Standard: ASME B40.100.
Case: Sealed cast aluminum or drawn steel; 4-1/2-inch nominal diameter.
Pressure-Element Assembly: Bourdon tube unless otherwise indicated.
Pressure Connection: Brass, with NPS 1/4, ASME B1.20.1 pipe threads and bottom-outlet type unless back-outlet type is indicated.
Movement: Mechanical, with link to pressure element and connection to pointer.
Dial: Nonreflective aluminum with permanently etched scale markings graduated in psi.
Pointer: Dark-colored metal.
Window: Glass or plastic
Ring: Brass
Accuracy: Grade A, plus or minus 1 percent of middle half of scale range.

GAGE ATTACHMENTS

Snubbers: ASME B40.100, brass; with NPS 1/4 or NPS 1/2, ASME B1.20.1 pipe threads and piston type surge-dampening device. Include extension for use on insulated piping.

Siphons: Loop-shaped section of brass pipe with NPS 1/4 or NPS 1/2 pipe threads.

Valves: Brass ball, with NPS 1/4 or NPS 1/2 ASME B1.20.1 pipe threads.

TEST PLUGS

Manufacturers: Subject to compliance with requirements, provide products by one of the following:

Flow Design, Inc.
Miljoco Corporation.
National Meter, Inc.
Peterson Equipment Co., Inc.
Sisco Manufacturing Company, Inc.
Trerice, H. O. Co.
Watts Regulator Co.; a div. of Watts Water Technologies, Inc.
Weiss Instruments, Inc.

Description: Test-station fitting made for insertion into piping tee fitting.

Body: Brass or stainless steel with core inserts and gasketed and threaded cap. Include extended stem on units to be installed in insulated piping.

Thread Size: NPS 1/4 or NPS 1/2, ASME B1.20.1 pipe thread.

Minimum Pressure and Temperature Rating: 500 psig at 200 deg F.

Core Inserts: Chlorosulfonated polyethylene synthetic and EPDM self-sealing rubber.

TEST-PLUG KITS

Manufacturers: Subject to compliance with requirements, provide products by one of the following:

Flow Design, Inc.
Miljoco Corporation.
National Meter, Inc.
Peterson Equipment Co., Inc.
Sisco Manufacturing Company, Inc.
Trerice, H. O. Co.
Watts Regulator Co.; a div. of Watts Water Technologies, Inc.
Weiss Instruments, Inc.

Furnish test-plug kit(s) containing one thermometer(s), one pressure gage and adapter, and carrying case. Thermometer sensing elements, pressure gage, and adapter probes shall be of diameter to fit test plugs and of length to project into piping.

Low-Range Thermometer: Small, bimetallic insertion type with 1- to 2-inch-diameter dial and tapered-end sensing element. Dial range shall be at least 25 to 125 deg F.

High-Range Thermometer: Small, bimetallic insertion type with 1- to 2-inch diameter dial and tapered-end sensing element. Dial range shall be at least 0 to 220 deg F.

Pressure Gage: Small, Bourdon-tube insertion type with 2- to 3-inch diameter dial and probe. Dial range shall be at least 0 to 200 psig.

Carrying Case: Metal or plastic, with formed instrument padding.

Turbine Flowmeters:

Manufacturers: Subject to compliance with requirements, provide products by one of the following into the Work include, but are not limited to, the following:

ABB; Instrumentation and Analytical.

Data Industrial Corp.

EMCO Flow Systems; a division of Spirax Sarco, Inc.

ERDCO Engineering Corp.

Hoffer Flow Controls, Inc.

Liquid Controls; a unit of IDEX Corporation.

McCrometer, Inc.

Midwest Instruments & Controls Corp.

ONICON Incorporated.

SeaMetrics, Inc.

Sponsler, Inc.; a unit of IDEX Corporation.

Description: Flowmeter with sensor and indicator.
Flow Range: Sensor and indicator shall cover operating range of equipment or system served.
Sensor: Impeller turbine; for inserting into pipe fitting or for installing in piping and measuring flow directly in gallons per minute.

Design: Device or pipe fitting with inline turbine and integral direct-reading scale for water.

Construction: Bronze or stainless-steel body, with plastic turbine or impeller.

Minimum Pressure Rating: 150 psig.

Minimum Temperature Rating: 180 deg.

Indicator: Hand-held meter; either an integral part of sensor or a separate meter.
Accuracy: Plus or minus 1-1/2 percent.
Display: Shows rate of flow, with register to indicate total volume in gallons.
Operating Instructions: Include complete instructions with each flowmeter.

PART 3 - EXECUTION

INSTALLATION

Install thermowells with socket extending a minimum of 2 inches into fluid to center of pipe and in vertical position in piping tees.

Install thermowells of sizes required to match thermometer connectors. Include bushings if required to match sizes.

Install thermowells with extension on insulated piping.

Fill thermowells with heat-transfer medium.

Install direct-mounted thermometers in thermowells and adjust vertical and tilted positions.

Install remote-mounted thermometer bulbs in thermowells and install cases on panels; connect cases with tubing and support tubing to prevent kinks. Use minimum tubing length.

Install duct-thermometer mounting brackets in walls of ducts. Attach to duct with screws.

Install direct-mounted pressure gages in piping tees with pressure gage located on pipe at the most readable position.

Install remote-mounted pressure gages on panel.

Install valve and snubber in piping for each pressure gage for fluids (except steam).

Install valve and syphon fitting in piping for each pressure gage for steam.

Install test plugs in piping tees.

Install flow indicators in piping systems in accessible positions for easy viewing.

Assemble and install connections, tubing, and accessories between flow-measuring elements and flowmeters according to manufacturer's written instructions.

Install flowmeter elements in accessible positions in piping systems.

Install wafer-orifice flowmeter elements between pipe flanges.

Install differential-pressure-type flowmeter elements, with at least minimum straight lengths of pipe, upstream and downstream from element according to manufacturer's written instructions.

Install permanent indicators on walls or brackets in accessible and readable positions.

Install connection fittings in accessible locations for attachment to portable indicators.

Mount thermal-energy meters on wall if accessible; if not, provide brackets to support meters.

Install thermometers in the following locations:

Inlet and outlet of each hydronic zone.
Inlet and outlet of each hydronic boiler.
Inlet and outlet of each hydronic coil in air-handling units.
Two inlets and two outlets of each hydronic heat exchanger.
Inlet and outlet of each thermal-storage tank.
Outside-, return-, supply-, and mixed-air ducts.

Install pressure gages in the following locations:

Discharge of each pressure-reducing valve.
Inlet and outlet of each chiller chilled-water and condenser-water connection.
Suction and discharge of each pump.

CONNECTIONS

Install meters and gages adjacent to machines and equipment to allow service and maintenance of meters, gages, machines, and equipment.

Connect flowmeter-system elements to meters.

Connect flowmeter transmitters to meters.

Connect thermal-energy meter transmitters to meters.

ADJUSTING

After installation, calibrate meters according to manufacturer's written instructions.

Adjust faces of meters and gages to proper angle for best visibility.

END OF SECTION

SECTION 230523 - GENERAL-DUTY VALVES FOR HVAC PIPING

PART 1 - GENERAL

SECTION INCLUDES

Valves for building HVAC service piping

REFERENCES

AGA Z21.22 – Relief Valves and Automatic Gas Shutoff Devices for Hot Water Supply Systems.

AWS – Welding and Brazing Qualifications.

MSS SP-67 – Butterfly Valves.

MSS SP-71 – Cast Iron Swing Check Valves Flanged and Threaded Ends.

MSS SP-78 – Cast Iron Plug Valves, Flanged and Threaded Ends

MSS SP-80 – Bronze Gate, Globe, Angle and Check Valves.

MSS SP-85 – Cast Iron Globe & Angle Valves, Flanged and Threaded Ends.

MSS SP-110 – Ball Valves Threaded, Socket-Welding, Solder Joint, Grooved and Flared Ends.

SUBMITTALS

Product Data: Submit Manufacturers catalog information with valve data and ratings for each service.

Welders Certificate: Include welders certification of compliance with ASME SEC IX.

Manufacturer's Installation Instructions: Submit hanging and support methods, joining procedures.

Manufacturer's Certificate: Certify that products meet or exceed specified requirements.

CLOSEOUT SUBMITTALS

Project Record Documents: Record actual locations of valves.

Operations and Maintenance Data: Submit installation instructions, spare parts lists, exploded assembly views.

QUALITY ASSURANCE

Perform Work in accordance with State of Texas standard.

Maintain one copy of each document on site.

Manufacturer: Company specializing in manufacturing products specified in this section with minimum three years documented experience, and with service facilities within 100 miles of Project.

Manufacturer: Company specializing in manufacturing products specified in this section with minimum three years documented experience approved by manufacturer.

22-413 Jefferson County Regional

Welding Materials and Procedures: Conform to ASME SEC 9.

Conform to ASME B31.9.

PRE-INSTALLATION MEETING

Convene minimum one week prior to commencing Work for this section.

DELIVERY, STORAGE, AND HANDLING

Accept valves on site in shipping containers with labeling in place. Inspect for damage.

Provide temporary protective coating on cast iron and steel valves.

ENVIRONMENTAL REQUIREMENTS

Do not install valves underground when bedding is wet or frozen.

WARRANTY

Provide five-year manufacturer warranty for valves excluding packing.

EXTRA MATERIALS

Supply two packing kits for each size valve.

PART 2 - PRODUCTS

VALVES

Manufacturer

Bray
Nibco
Dezurik
Keystone
Victaulic
Grinnell
Gruvlock
Jamesbury
Milwaukee

General

Provide valves of same manufacturer throughout the project where possible.
Provide valves with manufacturer's name and pressure rating clearly marked on outside of body.

Valve Connections

Provide valves suitable to connect to adjoining piping as specified for pipe joints. Use line pipe size valves.
Threaded pipe sizes 2 inches and smaller.
Flanged pipe size over 2 inches.
Solder or screw to solder adapters for copper tubing.
Use grooved coupling for grooved end pipe.

22-413 Jefferson County Regional

Gate Valves

2 Inches and Smaller: 200 psi W.O.G. bronze trim, rising stem, screwed in bonnet, inside screws, solid wedge, solder or screwed ends.
Over 2 Inches: 200 psi W.O. G. iron body, solid bronze trim through 3", rising stem, OS&Y, solid wedge, bolted bonnet, flanged ends.

Check Valves

2 Inches and Smaller: Bronze, swing disc, solder or screwed ends.
Over 2 Inches: Iron body, bronze trim, swing disc ,renewable disc and seat, flanged ends.
Discharge of Pumps: 150 psi W.O.G. iron body, replaceable bronze disc and seat, globe disc design. 316.S.S spring, flange connections.

Plug Cocks, Plug Valves

2 Inches and Smaller: Iron body, permanently lubricated bearing, brass plugs and washer, air tested, lever actuated with adjustable memory stop, solder or screwed ends.
2-1/2 Inches and Larger: Iron body, resilient face plug, permanently lubricated bearings, flanged ends, lever actuated with adjustable memory stop for sizes up through 6 inches. Provide manual gear operations for plug valves 8 inches and larger.

Butterfly Valves (4" and larger only) must be full-lug body type. Valves 4" through 12" must be rated for 200 psi at 175F,; valves 14" through 36" must be rated fir 150 psi at 200 F. Valves must meet ANSI Class 125/150 flanged standards and MSS SP-67 standards.

Valve body construction must be ductile iron.
Seat must be dovetail, or tongue-in-groove, EPDM seat designed to ensure bubble-tight bi-directional shutoff and must be field replaceable. Seat must be designed to fully isolate the valve body, stem and journal areas from the flowing media. Buna-N seat must be used for thermal storage and glycol systems.
Dist/Stem – The valve must have a one-piece disc/stem assembly or other positive mechanical engagement design for minimum obstruction to flow. Use of pins or bolts exposed in the waterway to attach disc to stem are <u>not</u> allowed. Material for disc and stem must be 316 stainless steel. The disc edges and hubs must be hand polished to a 32 AARH or better finish.
Inboard Bearings/Upper Steam Busing/ Stem Packing – The valve must have upper and lower inboard stem bearings isolated from the line media, a heavy duty upper stem bushing, and bi-directional stem packing to ensure dry stem design.
Operator must have an integral cast top plate for direct flush-mounting of manual operator or actuator without use of brackets or adapter. Provide valves 8" and larger with manual gear operators.

Drain Valves: Bronze compression stop with nipple and cap or hose thread.

Pressure Ratings: Unless otherwise indicated, use valve suitable for 125 minimum psig WSP at 450 degrees F and maximum 200 psig at 250 degrees F.

Ball Valves

2 Inches and Smaller: bronze body, full port, 316 S.S ball and stem, reinforced Teflon seats, separate packnut with adjustable stem packing, 600 psi W.O.G., solder or threaded ends. Valve ends must depth ANSI threads or

22-413 Jefferson County Regional

extended solder connections and conform to MSS SP-110. Provide with balancing stops and non-metallic stem extensions for pipe insulation.
Over 2 Inches: Carbon steel body, 316.S.S. ball and stem. Teflon seat and stuffing box seal, convention bore, Class 150 and conforming to MSS SP-72, lever handle, flanged ends, and balancing stops.

Manual Valve Operators

Provide suitable hand-wheels for gate, ball and drain valves.
Provide one plug valve wrench for every ten plug valves sized 2 inches and smaller, minimum of one. Provide each plug cock sized over 2 inches with a wrench, with set screw.
For butterfly valves provide gear operators for sizes 8 inches and larger. For smaller sizes, provide lever lock handle with toothed plate for shut-off service and infinitely adjustable handle with lock nut and memory stop for throttling service.
Provide valves located more than 6 feet from floor in equipment room areas with chain wheel operators. Extend chains to approximately 5 feet above floor and provide hook type tie back clips arranged to retain chain clear of walking aisles.

Pressure Reducing/ Pressure Sustaining Valve

400 psi W.O. G, bronze body, globe design, bolted bonnet, bronze pilot control, S.S. trim, Buna N disc. Provide with solenoid control, solenoid by-pass cock, flow clean strainer, isolation valve, check valve with cock, position transmitter, independent operating pressure, atmospheric drain, electronic controller, CV flow controls and Y-strainer.
The valve controller shall provide the interface between a remote computer system and the control valve. The controlled parameter signal shall be accepted through a 4-20 mA feedback signal. Local manual set point control and full manual control of control valve solenoids is to be provided on the controller panel for local control.
Upon receiving the set point command signal from the remoter computer system, the controller will signal the valve to move and maintain the valve at the desired set point. A vacuum fluorescent display of current status and setpoint valve in scalable engineering units shall be supplied.
The controller shall compare set point and feedback valves and adjust the . When the feedback signal deviates from the set point value, the appropriate opening or closing solenoid on the control valve shall activate . As the feedback signal approaches the set point, the solenoid output will pulse on and off to gradually return the measurement to set point. One solid state relay energizes for measurements condition below and set point while the other energizes for measurement greater than set point. The outputs shall be wired direct or through intermediate relays to the opening and closing solenoids on the control valve. Solenoid output indicator lights shall illuminate when either the open or closed solenoid is activated.
The total cycle time between each pulse shall be programmable between 1 and 60 seconds. The duration of each pulse shall be directly proportional to the deviation from set point outside of dead band. The time proportioned outputs shall be independently adjustable for conditions above and below the set points to properly tune valve response. The time proportional output band width shall be independently programmable between 1 and 200 percent of full scale. When the feedback signal returns within the dead band zone, the valve will maintain position. Provision shall be made to open/close/ maintain positioning the event of a loss of the feedback signal.

The operator interface shall consist of tow rows of alphanumeric characters to display numeric values and units. Color coded alarm, status and mode indicators shall inform the operator of operating conditions. Security key codes shall protect against undesired changes to the controller. Al programming shall include keyword and prompts to aid in setup and tuning the controller.

The controller shall be all solid state construction with the internal chassis capable of being removed fro inspection and adjustment. All program memory including set point and tuning parameters shall be protected by an internal lithium battery rated for 10 year life.

Remote communications shall be accepted through a 4-20 mA DC analog set point signal. The controller shall monitor the set point changed at the controller keypad.

The controller shall be capable of direct linkage to a computer or other instrumentation, which has RS-232C or RS-422 communications. When RS-422 data highway communications is specified, up to 64 controllers may be addressed from a single computer port and shall operated up to 5,000 form the computer or TRU and the valve controller. All set point, tuning, and auto-manual operation shall be adjustable remotely from the computer. All commands shall consist of ASCII mnemonic commands sent from the computer. Each transmission shall include the individual controller address. Communication baud rates shall be 300, 1,200 or 2,400 baud.

The Electronic Valve Controller shall be the Cla-Val, Co. or approved equal.

AIR VENTS

Manufacturers:

Bell and Gossett
Taco
Watts
Armstrong

Manual Type: Short vertical sections of 2 inch diameter pipe to form air chamber, with 1/8-inch brass needle valve at top of chamber.

Float Type: Brass, cast iron or semi-steel body, copper or stainless steel float, stainless steel valve and valve seat; suitable for system operating temperature and pressure (minimum 125 psig); with isolating valve.

STRAINERS

Manufacturers:

Keckley
Mueller
Strainers, Inc.
Victaulic
Grinnell

2 Inches and Smaller: Screwed brass or iron body for 150 psig working pressure, Y pattern with 1/32-inch stainless steel perforated screen.

2 ½ Inches to 4 Inches: Flanged iron body for 150 psig working pressure, Y pattern with 3/64-inch stainless steel perforated screen.

Over 4 Inches: Flanged iron body for 150 psig working pressure, basket pattern with 1/8-inch stainless steel perforated screen.

22-413 Jefferson County Regional

Provide grooved couplings for grooved end pipe.

RELIEF VALVES

Manufacturers:

Bell and Gossett
Taco
Watts
Armstrong

Bronze body, teflon seat, stainless steel stem and springs, minimum 3/4", automatic, direct pressure actuated, capacities ASME certified and labeled, set at factory for 45 psig, unless otherwise required by system.

FLOW METERING SYSTEM

Manufacturers

Balance Master
Parametrics
Approved Equal

General

Install in chilled and hot water lines, as shown on the drawings. Provide flow stations at each measuring point, two flow sensors and a hand-held, portable meter to serve multiple stations.
The system must have the following characteristics:

A meter that utilizes the transit-time principal of sonic flow metering.

Flow sensors that are portable and that do not com in contact with flow or protrude into the flow.

Flow Stations

Construct of cargon steel, ASTM A-53, Grade A and sized to match the diameter of the pipe in which they are being installed.
Full-port design with Class 150 flat-faced flange connections for sizes 2 1/2" through 24”. The maximum working pressure must be 350 psig through a 32 F to 250F temperature range.
Include two carbon steel sensor bosses drilled through to accept a brass sensor carrier.
Provide a high-temperature thermoplastic sensor window with o-ring seal integral to each sensor carrier and to serve as a pressure barrier, isolating sensor from line flow.

Flow Meter

Provide one master flow meter for this project, to become the property of the Owner.
Provide an hand-held, portable meter which instantaneously displays flow and./or changes in flow by means of a high-visibility, integral, backlit LCD that displays flow rate in GPM. Charts and tables are <u>not</u> allowed.

22-413 Jefferson County Regional

PUMP SUCTION FITTINGS

Manufacturers:

Bell and Gossett
Taco
Victaulic

Fitting: Angel pattern, cast iron body, flanged for over 2 inches, rated for 125 psig working pressure with inlet vanes, cylinder strainer with 3/16-inch diameter openings, disposable fine mesh strainer to fit over cylinder strainer and permanent magnet located in flow stream and removable for cleaning.

Accessories: Adjustable foot support, blow down tapping in bottom, gage tapping in side.

Provide mated flanges at all pump suctions.

PRESSURE REDUCING VALVES

Manufacturers

Bell and Gossett
Taco
Woods
Armstrong

Bronze body, removable cartridge seat assembly, bronze internal pars; with built-in back pressure check valve and adjustable filling valve pressure . Valves shall be minimum 3/4" and factory set for 25 PSI.

Units shall be full line size.

AIR SEPARATOR FITTINGS

Class 150, Single-Flange, High-Performance Butterfly Valves:

Manufacturers: Subject to compliance with requirements, [provide products by one of the following] [available manufacturers offering products that may be incorporated into the Work include, but are not limited to, the following]:

Steel tank, flanged inlet and outlet connections, separate top fittings for make-up line connection and automatic air vent, bottom connections for blow-down and cleaning, ASME construction and stamped for 125 psi design pressure.

Units shall be full line size.

PART 3 - EXECUTION

PREPARATION

Ream pipe and tube ends. Remove burrs. Bevel plain end ferrous pipe.

Remove scale and dirt on inside and outside before assembly.

Prepare piping connections to equipment with flanges or unions.

After completion, fill, clean, and treat systems.

INSTALLATION

Route piping in orderly manner, plumb and parallel to building structure, and maintain gradient.

Install piping to conserve building space, and not interfere with use of space and other work.

Group piping whenever practical at common elevations.

Install piping with pipe rollers, guides, anchors, and expansion loops as required to allow for expansion and contraction without stressing pipe, joints, or connected equipment; refer to Section 15121.

Provide clearance for installation of insulation, and access to valves and fittings.

Provide access where valves and fittings are not exposed.

Slope piping and arrange systems to drain at low points. Use eccentric reducers to maintain loop of pipe level.

Where pipe support members are welded to structural building framing, scrape, brush clean, and apply one coat of zinc rich primer to welding.

Prepare pipe, fittings, supports, and accessories for primer coat painting prior to insulation. Prepare pipe, fittings, supports, and accessories for primer coat, undercoat, and finish coat painting for all un-insulated piping,

Use grooved mechanical couplings and fasteners only in equipment rooms.

Install unions downstream of valves and at equipment or apparatus connections.

Install brass male adapter each side of valves in copper piped system. Sweat solder adapters to pipe.

Install ball or butterfly valves for shut-off and to isolate equipment, part of systems, or vertical risers and as shown on the drawings.

Install ball or plug valves where indicated for throttling, bypass, or manual flow control services.

Provide spring loaded check valves on discharge of chilled water and condenser water pumps.

Use plug valves for throttling or balancing service, unless indicated otherwise.

Provide 3/4-inch ball drain valves at main shut-off valves, low points of piping, bases of vertical risers, and at equipment. Pipe to nearest drain.

Use ball valves 3 inches and smaller and butterfly valves over 3 inches in chilled and hot water systems.

Install specialties in accordance with manufacturer's instruction to permit int5ended performance.

Provide manual air vents at system high points readily accessible.

Provide automatic air vents in ceiling spaces or other high or concealed locations, provide vent tubing to nearest drain.

Provide valve drain and hose connection on strainer blow down connection.

Provide a relief valve on discharge side pumps.

Select system relief valve capacity so that it is greater than system operating pressure.

Pipe relief valve outlet to nearest floor drain.

22-413 Jefferson County Regional

Where on line vents several relief valves, make cross sectional area equal to sum of individual vent areas.

Provide pump suction fitting on suction side of base mounted centrifugal pumps where indicated. Remove temporary strainers after cleaning systems.

Support pump fittings with floor mounted pipe and flange supports.

Provide flow metering stations where indicated on the drawings. Furnish the TAB Contractor with the flow meter to be used in performing his work. After completion of all TAB work, turn the flow meter over to the Owner's personnel for their use. Provide the Owner with a schematic drawing indicating the location of all flow metering stations and the design flow metering stations and the design flow rate for each station. Instruct the Owner's personnel in the proper use of the flow metering equipment.

Provide thermometer and pressure gauges for all equipment and/or as shown on the drawings.

Pipe make-up line with pressure reducing and pressure relief valves to air separator fitting. Provide quick-fill/ bypass line as shown on the drawings.

Pipe chilled and heating hot water system air separator fittings. Install automatic air vent on air separator and pipe outlet to floor drain.

APPLICATION SCHEDULE

Chilled-Water Systems: Use the following valve types:

Gate Valves: Class 150, bronze body; or Class 125, cast-iron body for isolation duty.
Ball Valves: Class 150, CWP, with stem extension and memory stop.
Plug Valves: Buna N packing for balancing.
Globe Valves: Class 125, bronze body with bronze or teflon disc; or Class 125, cast-iron body.
Butterfly Valves: Nickel-plated ductile iron, aluminum bronze, or elastomer-coated ductile iron disc; EPDM sleeve and stem seals for isolation duty.
Check Valves: Class 125, bronze body swing check with rubber seat; Class 125, cast-iron body swing check; Class 125, cast-iron body wafer check; or Class 125, cast-iron body lift check.

VALVE PRESSURE/TEMPERATURE CLASSIFICATION SCHEDULES

VALVES, 2-INCH AND SMALLER

SERVICE	GATE	GLOBE	BALL	CHECK
Chilled Water	125	125	150	125
Heating Hot Water	150	150	150	150

VALVES, 2-1/2-INCH AND LARGER

SERVICE	GATE	GLOBE	BUTTERFLY	CHECK
Chilled Water	125	125	200	125
Heating Hot Water	150	150	200	150

END OF SECTION

SECTION 230529 - HANGERS AND SUPPORTS FOR HVAC PIPING AND EQUIPMENT

PART 1 - GENERAL

SECTION INCLUDES

Furnish and install supports, anchors and sleeves applicable to mechanical, plumbing, and fire protection systems, including:

- Pipe, duct, and equipment hangers, supports, and associated anchors.
- Equipment bases and supports.
- Sleeves and seals.
- Flashing and sealing equipment and pipe stacks.

WORK FURNISHED BUT INSTALLED UNDER OTHER SECTIONS

Provide hanger and support inserts and sleeves and coordinate placement into formwork.

RELATED SECTIONS

Section 230700 – HVAC Insulation.

Section 230716 – HVAC Equipment Insulation.

Section 230719 – HVAC Piping Insulation.

PART 2 - PRODUCTS

MANUFACTURERS

Grinnell

Superstruct

Unistrut

Specified Technologies, Inc.

FireSage

Link-Seal

3M

Rectorseal

PIPE HANGERS AND SUPPORTS

Hangers for Non-Insulated Pipe Sizes 1/2 to 4-Inch: Provide malleable iron, adjustable swivel, split ring.

Hangers for Insulated Pipe Sizes 1/2 to 3 Inches and Non-Insulated Pipe Sizes 6 Inches and Over: Galvanized carbon steel, adjustable, clevis.

Supports for Single Hot Pipe Sizes 4 Inches and Over and Cold Pipe Sizes 4 Inches and Over; Carbon Steel Roller.

Multiple or Trapeze Hangers: Galvanized steel channels with welded spacers and hangers rods, cast iron roll and stand for sizes 4 inches and larger hot water piping and 4 inches and larger chilled water piping.

Wall Support for Pipe Sizes to 3 Inches: Cast iron hook.

Wall Support for Pipe Sizes to 4 Inches and Over: Welded steel bracket and wrought steel clamp; adjustable steel yoke and cast iron roll.

Vertical Support: Steel riser clamp.

Floor Support for Pipe Sizes 4 Inches and All Cold Pipe Sizes: Cast iron adjustable pipe saddle , locknut nipple, floor flange, and concrete pier or steel support.

Floor Support for Pipe Sizes 6 Inches and Over: Adjustable cast iron roll and stand, steel screws, and concrete pier or steel support.

Design hangers without disengagement of supported pipe.

Copper Pipe Support and Hangers: Carbon steel ring, adjustable, copper plated.

Shield for Insulated Piping 2 Inches and Smaller: 18 gauge galvanized steel shield over insulation in 180-degree segments, minimum12 inches long at pipe support.

Shield for Insulated Piping 2-1/2 Inch and Larger (Except Cold Water Piping): Use pipe support inserts.

Galvanized steel shields in 180-degree segments in accordance with following table:

Pipe

Metal Gauge

Shield Length

2 1/2" to 5"

15

12"

6" to 12"

14

24"

Over 12"

12

24"

HANGER RODS

Steel, threaded both ends, threaded one end or continuous threaded. Galvanized or cadmium plated.

INSERTS

Provide malleable iron case of galvanized steel shell and expander plug for threaded connection with lateral adjustment, top slot for reinforcing rods, lugs for attaching to forms, size inserts to suit threaded hanger rods.

FLASHING

Metal Flashing: 26 gauge galvanized steel.

Flexible Flashing: 47 mil thick sheet butyl: compatible with roofing.

Caps: Steel, 22 gauge minimum; use 16 gauge at fire resistant elements.

EQUIPMENT BASE AND SUPPORTS

Provide 6" concrete pads and equipment bases for all outdoor equipment on grade, floor mounted equipment in main central plant area, areas with floor below grade, penthouse equipment rooms, floor mounted air handling units and where shown on Drawings.

Provide prefabricated curbs or roof mounted equipment with the equipment. Equipment curb must compensate for slopped roof deck as required to set equipment level.

SLEEVES

Sleeves for Pipes Through Non-fire Rated Floors: Form with 16 gauge galvanized steel.

Sleeves for Pipes Through Non-fire Rated Beams, Walls, Above Grade: Form with 18 gauge galvanized steel.

Sleeves for Pipes Through Fire Rated and Fire Resistive Floors and Walls, and Fireproofing: Provide prefabricated fire rated sleeves including seals, UL listed; or provide Schedule 40 galvanized steel, sized for minimum 1 inch space between sleeve and carrier pipe.

Sleeves for Pipe Through Floor Supporting Riser Piping: Standard weight galvanized steel pipe.

Sleeves for Pipes Through Roof: Standard weight galvanized steel pipe.

Sleeves for Round Ductwork: Form with galvanized steel.

Sleeves for Rectangular Ductwork: Form with galvanized steel.

Provide fire-stop compound at all penetrations of floor slabs or firewalls such that fire rating integrity of barrier is not lessened.

Caulk: Caulk all sleeves water and airtight.

Size sleeves large enough to allow for movement due to expansion and contraction. Provide for continuous insulation wrapping. Provide pipe sleeves one size larger that the pipe it serves, including insulation, except where “Link Seal” casing seals are used.

Sleeves Penetration Walls Below Grade: Provide “Link-Seal” and sleeve as manufactured by Thunderline Corporation, Wayne, Michigan, for all pipes passing through walls below grade.

FINISHES

Prime coat and paint exposed steel hangers and supports. Hangers and supports located in crawl spaces, pipe shafts, and suspended ceiling spaces are not considered exposed.

Provide galvanized hangers and supports for all piping and ductwork located in crawlspace, pipe shafts, and above suspended ceiling spaces.

Provide hanger rods, bolts, nuts, and all metal parts coated with the same material as hangers.

ANCHOR BOLTS

Provide galvanized anchor bolts for all equipment placed on concrete pads or on concrete slabs of the size and number recommended by the manufacturer of the equipment.

PART 3 - EXECUTION

PIPE HANGERS AND SUPPORTS

Support horizontal pipes as follows:

Pipe Size	Max. Hanger Spacing*	Hanger Diameter
1/2 to 1-1/4 inch	6’-6”	3/8”
1-1/2 to 2 inch	8’-0”	3/8”
2-1/2 to 3 inch	10’-0”	1/2”
4 to 6 inch	10’-0”	5/8”
8 to 12 inch	10’-0”	7/8”
14 inch and Over	14’-0”	1”
C.I. Bell and Spigot (or No-Hug)	5’-0” and at Joints	
*Comply with NFPA 13 for fire protection pipe hanger spacing.		

Install hangers to provide minimum 1/2-inch space between finished covering and adjacent work.

Place a hanger within 12 inches of each horizontal elbow.

Use hangers with 1-1/2 inch minimum vertical adjustment.

Support horizontal cast iron pipe adjacent to each hub, with five feet maximum spacing between fingers.

Support vertical piping at every floor. Support vertical cast iron pipe at each floor at hub.

Where several pipes can be installed in parallel and at same elevation, provide multiple or trapeze hangers.

Support riser piping independently of connected horizontal piping.

Provide corrosion resistant hangers by Corr-Tech for all piping hangers in corrosive areas. Provide hanger rods, bolts, nuts and all metal parts coated with the same material as hangers.

INSERTS

Provide inserts for placement in concrete formwork.

Provide inserts for suspending hangers from reinforced concrete slabs and sides of reinforced concrete beams.

Provide hooked rod to concreter reinforcement section for inserts carrying pipe over 4 inches.

Where concrete slabs form finished ceiling, provide inserts flush with slab surface.

Where inserts are omitted, drill through concrete slab from below and provide thru-bolt with recessed square steel plate and nut recessed into and grouted flush with slab.

FLASHING

Provide flexible flashing and metal counter-flashing where sleeves, piping and ductwork penetrate weather or waterproofed walls, floors, and roofs.

Flexible sheet flash and counter-flash all curbs for mechanical equipment on roof with sheet metal; seal watertight.

EQUIPMENT BASES AND SUPPORTS

Coordinate installation of equipment bases of concrete type specified for all outdoor equipment on grade and floor mounted equipment in main central plant area, areas with floors below grade, penthouse equipment rooms floor mounted air handling units and where shown on drawings.

Provide templates, anchor bolts, and accessories for mounting and anchoring equipment

Construct support of steel members. Brace and fasten with flanges bolted to structure.

Provide rigid anchors for pipes after vibration isolation components are installed.

Provide base of a minimum height of 4 inches above finished grade and a width that projects a minimum of 3 inches beyond equipment on all sides. Bevel edges of base.

Prepare surface under bases by cleaning, clearing, chipping and roughing.

Provide curbs of 14 inches minimum height above roofing surface for installation of mechanical equipment on roof.

SLEEVES

Provide sleeves for all pipe penetrations through walls, roof or slab above grade.

Set sleeves in position in formwork. Provide reinforcing around sleeves.

Extend sleeves through floors 2 inches above finished floor level. Caulk sleeves full depth and provide floor plate.

Where piping or ductwork penetrates floor, ceiling wall, close off space between pipe or duct and adjacent work with fire stopping insulation and seal air tight. Provide close fitting metal collar or escutcheon covers at both sides of penetration. When penetration is through a fire rated floor or wall, provide fire safing insulation so that the assembly when complete is UL listed and equals the fire rating of construction penetrated by the sleeve.

Install chrome plated steel escutcheons at finished surfaces.

Provide three 6 inch long reinforcing rods welded at 120-degree spacing to the sleeve on all sleeves supporting riser piping 4 inches and larger. Embed reinforcing rods in concrete or grout to existing concrete.

Install sleeve assembly for walls below grade with 1/4-inch thick plate located in the middle of the wall.

Neatly cut hose in existing walls, floors and roofs for placement of sleeves. Place sleeve and grout, and caulk annular space to provide finished appearance.

Install pipe in sleeve so that neither the pipe nor its insulation touches the sleeve at any point.

Seal space between pipe and sleeve watertight for all sleeves penetrating the roof.

ANCHOR BOLTS

Locate position of anchor bolts by means of suitable templates.

When equipment is placed on vibration isolators, secure equipment to the isolator and the isolator to the floor, pad or support as recommended by the vibration isolator manufacturer.

INSULATION SHIELDS

Provide insulation shields at every hanger support.

Provide shields of the proper length to distribute weight evenly and to prevent sagging or indentation of insulation at hanger.

Install shield so that hanger is placed at the center of the shield.

Attach shield to insulation with adhesive to prevent slippage or movement.

END OF SECTION

SECTION 230548 - VIBRATION CONTROLS FOR HVAC PIPING AND EQUIPMENT

PART 1 - GENERAL

SECTION INCLUDES

Furnish and install vibration isolators for rotary, dynamic, or reciprocating equipment or components; include:
Inertia bases
Vibration isolation

REFERENCES

ASHRAE – Guide to average Noise Criteria Curves

Local codes and ordinances

Special conditions

SUBMITTALS

Indicate isolation base dimensions.

B. Indicate vibration isolator locations, with static and dynamic load.

Include calculation required to certify compliance with specified requirements.

Submit manufacturer's certificate that isolators are properly installed and properly adjusted to meet or exceed specified requirements.

QUALITY ASSURANCE

Maintain ASHRAE criteria for average noise criteria curves for all equipment at full load condition.

B. Provide vibration isolation devices, including auxiliary steel bases and pouring forms, from a single manufacturer or supplier who will be responsible for complete coordination of all phase of this work.

PART 2 - PRODUCTS

MANUFACTURERS

Amber-Booth Company

Korfund Dynamics Corporation

Mason Industries

Peabody Noise control Inc.

Vibration Eliminator Co., Inc.

ISOLATION BASES

Type A: Integral structural steel fan and motor base with motor slide rails.

Type B: Slung structural steel base with gusseted brackets.

Type C: Reinforced 3,000 psi concrete set in full depth perimeter structural steel channel frame, with gusseted brackets and anchor bolts.

Type D: Reinforced 3,000 psi concrete base with chamfered edges without channel frame.

VIBRATION ISOLATORS

Type 1: Closed spring mount with top and bottom housing separated with neoprene rubber stabilizers.

Type 2: Open spring mount with stiff springs (horizontal stiffness equal to vertical stiffness.

C. Type 3: Open spring mount with stiff springs, heavy mounting frame, and limit stop.

Type 4: Closed spring hanger with acoustic washer.

Type 5: Closed spring hanger with 1 inch thick acoustic isolator.

Type 6: Rubber waffle pads, 30 durometer, minimum 1/2-inch thick, maximum loading 40 psi. Use neoprene in oily or exterior locations.

Type 7: 1/2-inch thick rubber waffle pads bonded each side to 1/4-inch thick steel plate.

Type 8: Type BRD-1 rubber-in-shear isolators. Size isolator for 0.35-inch deflection.

FABRICATION

Provide pairs of neoprene side snubbers or restraining springs where side torque or thrust may develop.

B. Color code spring mounts.

Select spring to operate at two-thirds maximum compression strain, with 1/4 inch ribbed neoprene pads.

Type 1 Isolators: Fabricate with cast aluminum or hot-dipped galvanized steel housing with PVC coated steel spring and neoprene pad bonded to base plate.

PART 3 - EXECUTION

INSTALLATION

Install vibration isolators for motor driven equipment.

Set steel bases for 1 inch clearance between housekeeping pad and base. Set concrete inertia bases for 2 inch clearance. Adjust equipment level.

Provide spring isolators on piping connected to isolated equipment as follows: up to 4 inch diameter, first three points of support; five to 8 inch diameter, first four points of

support; 10 inch diameter and over, first six points of support. Static deflection of first point to be twice deflection of isolated equipment.

Provide minimum of four hangers for each fan coil unit and fan powered terminal units. Provide isolators for each hanger.

SCHEDULE

Isolated Equipment	Base Type	Isolator Type
Air Handling Units Floor Mounted	A or B	1
Centrifugal Fans Class I & II to 54 inches Class I & II over 60 inches Class III	A A & C A & C	1 1 1
Air Compressors & Vacuum units	D	1
Heat Exchangers Slab on Grade	D	6
Other than Slab on Grade	C	1
Pumps 3 hp & Smaller 5 hp & Over	 A D	 7 2
Piping		5
Isolated Equipment	**Base Type**	**Isolator Type**
Ductwork		N/A
Fan Powered Terminal Units		8
Fan Coil Units		8

END OF SECTION

SECTION 230550 - VARIABLE-FREQUENCY MOTOR CONTROLLERS

PART 1 - GENERAL

SUMMARY

Section includes separately enclosed, preassembled, combination VFCs, rated 600 V and less, for speed control of three-phase, squirrel-cage induction motors.

DEFINITIONS

CE: Conformite Europeene (European Compliance).

CPT: Control power transformer.

DDC: Direct digital control.

EMI: Electromagnetic interference.

OCPD: Overcurrent protective device.

PID: Control action, proportional plus integral plus derivative.

RFI: Radio-frequency interference.

VFC: Variable-frequency motor controller.

SUBMITTALS

Product Data: For each type and rating of VFC indicated.

Shop Drawings: For each VFC indicated.

Include details of equipment assemblies. Indicate dimensions, weights, loads, required clearances, method of field assembly, components, and location and size of each field connection.
Include diagrams for power, signal, and control wiring.

Field quality-control reports.

Operation and maintenance data.

WARRANTY

Special Warranty: Manufacturer agrees to repair or replace VFCs that fail in materials or workmanship within specified warranty period.

Warranty Period: **Five** years from date of Substantial Completion.

PART 2 - PRODUCTS

MANUFACTURERS

ABB

SYSTEM DESCRIPTION

General Requirements for VFCs:

VFCs and Accessories: Listed and labeled as defined in NFPA 70, by a qualified testing agency, and marked for intended location and application.
Comply with NEMA ICS 7, NEMA ICS 61800-2

Application: **variable torque**

VFC Description: Variable-frequency motor controller, consisting of power converter that employs pulse-width-modulated inverter, factory built and tested in an enclosure, with integral disconnecting means and overcurrent and overload protection; listed and labeled by an NRTL as a complete unit; arranged to provide self-protection, protection, and variable-speed control of one or more three-phase induction motors by adjusting output voltage and frequency.

Units suitable for operation of NEMA MG 1 motors.
Listed and labeled for integrated short-circuit current (withstand) rating by an NRTL acceptable to authorities having jurisdiction.

Design and Rating: Match load type, such as fans, blowers, and pumps; and type of connection used between motor and load such as direct or through a power-transmission connection.

Output Rating: Three phase; 10 to **60 Hz, with voltage proportional to frequency throughout voltage range**; maximum voltage equals input voltage.

Unit Operating Requirements:

Input AC Voltage Tolerance: Plus 10 and minus **10** percent of VFC input voltage rating.
Input AC Voltage Unbalance: Not exceeding **3** percent.
Input Frequency Tolerance: Plus or minus 3 percent of VFC frequency rating.
Minimum Efficiency: **96** percent at 60 Hz, full load.
Minimum Displacement Primary-Side Power Factor: **96** percent under any load or speed condition.
Minimum Short-Circuit Current (Withstand) Rating: [**10**] [**22**] [**65**] [**100**] kA.
Ambient Temperature Rating: Not less than 32 deg F (0 deg C) and not exceeding 104 deg F (40 deg C).
Humidity Rating: Less than 95 percent (noncondensing).
Altitude Rating: Not exceeding 3300 feet (1000 m).
Overload Capability: **1.5** times the base load current for 60 seconds; minimum of 1.8 times the base load current for three seconds.
Starting Torque: Minimum 100 percent of rated torque from 3 to 60 Hz.
Speed Regulation: Plus or minus **5** percent.
Output Carrier Frequency: Selectable; 0.5 to **15** kHz.
Stop Modes: Programmable; includes fast, free-wheel, and dc injection braking.

Inverter Logic: Microprocessor based, isolated from all power circuits.

Isolated Control Interface: Allows VFCs to follow remote-control signal over a minimum 40:1 speed range.

Signal: Electrical.

Internal Adjustability Capabilities:

Minimum Speed: 5 to 25 percent of maximum rpm.
Maximum Speed: 80 to 100 percent of maximum rpm.
Acceleration: **0.1 to 999.9** seconds.
Deceleration: **0.1 to 999.9** seconds.
Current Limit: 30 to minimum of 150 percent of maximum rating.

Self-Protection and Reliability Features:

Surge Suppression: Factory installed as an integral part of the VFC, complying with UL 1449 SPD, Type 1 or Type 2.
Loss of Input Signal Protection: Selectable response strategy, including speed default to a percent of the most recent speed, a preset speed, or stop; with alarm.
Under- and overvoltage trips.
Inverter overcurrent trips.
VFC and Motor-Overload/Overtemperature Protection: Microprocessor-based thermal protection system for monitoring VFCs and motor thermal characteristics, and for providing VFC overtemperature and motor-overload alarm and trip; settings selectable via the keypad.
Critical frequency rejection, with **three** selectable, adjustable deadbands.
Instantaneous line-to-line and line-to-ground overcurrent trips.
Loss-of-phase protection.
Reverse-phase protection.
Short-circuit protection.
Motor-overtemperature fault.

Automatic Reset/Restart: Attempt three restarts after drive fault or on return of power after an interruption and before shutting down for manual reset or fault correction; adjustable delay time between restart attempts.

Power-Interruption Protection: To prevent motor from re-energizing after a power interruption until motor has stopped, unless "Bidirectional Autospeed Search" feature is available and engaged.

Torque Boost: Automatically varies starting and continuous torque to at least 1.5 times the minimum torque to ensure high-starting torque and increased torque at slow speeds.

Motor Temperature Compensation at Slow Speeds: Adjustable current fall-back based on output frequency for temperature protection of self-cooled, fan-ventilated motors at slow speeds.

Integral Input Disconnecting Means and OCPD: NEMA KS 1 **nonfusible switch,** with pad-lockable, door-mounted handle mechanism.

Disconnect Rating: Not less than 115 percent of VFC input current rating.

CONTROLS AND INDICATION

Status Lights: Door-mounted LED indicators displaying the following conditions:

Power on.

Run.
Overvoltage.
Line fault.
Overcurrent.
External fault.

Panel-Mounted Operator Station: Manufacturer's standard front-accessible, sealed keypad and plain-English-language digital display; allows complete programming, program copying, operating, monitoring, and diagnostic capability.

Keypad: In addition to required programming and control keys, include keys for HAND, OFF, and AUTO modes.
Security Access: Provide electronic security access to controls through identification and password with at least one level of access: View only; view and operate; and view, operate, and service.

Control Authority: Supports at least four conditions: Off, local manual control at VFC, local automatic control at VFC, and automatic control through a remote source.

Historical Logging Information and Displays:

Real-time clock with current time and date.
Running log of total power versus time.
Total run time.
Fault log, maintaining last **four** faults with time and date stamp for each.

Indicating Devices: Digital display mounted flush in VFC door and connected to display VFC parameters including, but not limited to:

Output frequency (Hz).
Motor speed (rpm).
Motor status (running, stop, fault).
Motor current (amperes).
Motor torque (percent).
Fault or alarming status (code).
PID feedback signal (percent).
DC-link voltage (V dc).
Set point frequency (Hz).
Motor output voltage (V ac).

Control Signal Interfaces:

Electric Input Signal Interface:

A minimum of **two** programmable analog inputs: **0- to 10-V dc or 4- to 20-mA dc.**

A minimum of **six** multifunction programmable digital inputs.

Remote Signal Inputs: Capability to accept any of the following speed-setting input signals from the DDC system for HVAC or other control systems:

0- to 10-V dc.

4- to 20-mA dc.

Potentiometer using up/down digital inputs.

Fixed frequencies using digital inputs.

Output Signal Interface: A minimum of two programmable analog output signal(s) **0- to 10-V dc or 4- to 20-mA dc and four binary output dry contact closure relays.**, which can be configured for any of the following:

Output frequency (Hz).

Output current (load).

DC-link voltage (V dc).

Motor torque (percent).

Motor speed (rpm).

Set point frequency (Hz).

Alarm

Fault

Status

PID Control Interface: Provides closed-loop set point, differential feedback control in response to dual feedback signals. Allows for closed-loop control of fans and pumps for pressure, flow, or temperature regulation.

Number of Loops: **One**.

OPTIONAL FEATURES

Communication Port: ASHRAE 135 Compliant BACnet interface.

ENCLOSURES

VFC Enclosures: NEMA 250, to comply with environmental conditions at installed location.

Dry and Clean Indoor Locations: **Type 1**

PART 3 - EXECUTION

INSTALLATION

Wall-Mounting Controllers: Install with tops at uniform height and with disconnect operating handles not higher than 79 inches (2000 mm) above finished floor, unless otherwise indicated, and by bolting units to wall or mounting on lightweight structural-

steel channels bolted to wall. For controllers not on walls, provide freestanding racks complying with Section 260529 "Hangers and Supports for Electrical Systems."

Install fuses if not factory installed. Comply with requirements in Section 262813 "Fuses."

Install heaters in thermal-overload relays. Select heaters based on actual nameplate full-load amperes after motors are installed.

Install, connect, and fuse thermal-protector monitoring relays furnished with motor-driven equipment.

Comply with NECA 1.

IDENTIFICATION

Identify VFCs, components, and control wiring. Comply with requirements for identification specified in Section 260553 "Identification for Electrical Systems."

Identify field-installed conductors, interconnecting wiring, and components; provide warning signs.
Label each VFC with engraved nameplate.
Label each enclosure-mounted control and pilot device.

FIELD QUALITY CONTROL

Perform tests and inspections.

Acceptance Testing Preparation:

Test insulation resistance for each VFC element, bus, component, connecting supply, feeder, and control circuit.
Test continuity of each circuit.

Tests and Inspections:

Inspect VFC, wiring, components, connections, and equipment installation. **Test and adjust controllers, components, and equipment.**
Test insulation resistance for each VFC element, component, connecting motor supply, feeder, and control circuits.
Test continuity of each circuit.

VFCs will be considered defective if they do not pass tests and inspections.

Prepare test and inspection reports, including a certified report that identifies the VFC and describes scanning results. Include notation of deficiencies detected, remedial action taken, and observations made after remedial action.

ADJUSTING

Program microprocessors for required operational sequences, status indications, alarms, event recording, and display features. Clear events memory after final acceptance testing and prior to Substantial Completion.

DEMONSTRATION

Train Owner's maintenance personnel to adjust, operate, reprogram, and maintain VFCs.

END OF SECTION 262923

SECTION 230553 - IDENTIFICATION FOR HVAC PIPING AND EQUIPMENT

PART 1 - GENERAL

SECTION INCLUDES

Identification of mechanical products installed under Division 23.

REFERENCES

ANSA A 13.1 – Scheme for the Identification of Piping Systems.

NFPA 90A – Installation of Air Conditioning and Ventilating Systems.

SUBMITTALS

Submit valve chart and schedule, including valve tag number, location, function, and valve manufacturer's name and model number.

PART 2 - PRODUCTS

MANUFACTURERS

W.H. Brady Company

Marken Corporation

Seton Name Plate Company

MATERIALS

Color: Meet requirements of ANSI A13.1, unless specified otherwise.

Plastic Nameplates: Laminated three-layer plastic with engraved white letters on a black background; minimum size 3 inches long and 1 inch high. Minimum lettering height for numbers and names is 1/4-inch and other data is 1/8-inch.

Metal Tags: Brass with stamped letters: tag size if minimum of 1-1/2 inch diameter with smooth edges.

Stencils: With clean cut symbols and letters 2-1/2 inch high for ductwork and equipment

Stencil Paint: Semi-gloss, high build epoxy esther or alkyd paint.

Plastic Pipe Markers: Factory fabricated, flexible, semi-rigid plastic, preformed to fit around pipe or pipe covering, minimum information indicating flow direction arrow and fluid being conveyed.

Plastic Tape Pipe Markers: Flexible, vinyl film tape with pressure sensitive adhesive backing and printed markings.

Underground Plastic Pipe Markers: Bright colored continuously printed plastic ribbon tape of not less than 6 inches wide by 4 mil thick, manufactured for direct burial service.

Paint:

Material Capability: Provide primers, undercoat, finish coat, and related materials that are compatible with one another and the substrates indicated under conditions of service and application, as demonstrated by the manufacturer based on testing and field experience.

Material Quality:

Provide the manufacturer's highest-quality trade sale paint material of the various coating types specified. Paint material containers not displaying manufacturer's product identification will not be acceptable.

Use of manufacturer=s proprietary product names to designate colors or materials is not intended to imply that products named are required to be used to the exclusion of equivalent products of other manufacturers. Furnish the manufacturer's material data and certificates of performance for proposed situations.

Provide primer and undercoat materials with a minimum six month guaranteed life against fade and/or color bleed-through.

Colors: Provide color samples to the Architect/Engineer for selection form the manufacturer's full range of standard colors.

Primers: Provide the manufacturer's recommended factory-formulated primers that are compatible with the substrate and finish coats indicated. Subject to compliance with requirements, prime coat materials that may be incorporated in the Work include, but are not limited to the following:

Galvanized Metal Primers:

Devoe: 13201 Mirrorlac Galvanized Metal Primer.
Glidden: 5229 Glid-Guard All-Purpose Metal Primer.
Moore: IornClad Galvanized Metal Latex Pirmer #155.

Ferrous Metal Primers

Devoe: 14920 Bar-Ox Quick Dry Metal Primer, Red.
Glidden: 5210 Glid-Guard Universal Fast-Dry Metal Primer.
Moore: IornClad Retardo Rust-Inhibitive Paint #163.

Undercoat Materials: Provide the manufacturer's recommended factory-formulated primers that are compatible with the substrate and finish coats indicated. Subject to compliance with requirements, prime coat materials that may be incorporated in the Work include, but are not limited to the following:

Galvanized Metal Primers:

Devoe: 8801 Velour Alkyd Enamel Undercoat.
Glidden: 4200 Spred Ultra Semi-Gloss Enamel.
Moore: Moore's Alkyd Enamel Underbody #217.

Ferrous Metal Primers

Devoe: 8801 Velour Alkyd Enamel Undercoat.
Glidden: 4200 Spred Ultra Semi-Gloss Enamel.
Moore: Moore's Alkyd Enamel Underbody #217.

Finish Paint: Provide the manufacturer's recommended factory-formulated primers that are compatible with the substrate and finish coats indicated. Subject to compliance with requirements, prime coat materials that may be incorporated in the Work include, but are not limited to the following:

Galvanized Metal Primers:

22-413 Jefferson County Regional
Airport Main Terminal HVAC

Devoe: 26XX Velour Alkyd Semi-Gloss Enamel.
Glidden: 4200 Spred Ultra Semi-Gloss Enamel.
Moore: Moore's Sating Impervo Enamel #235.

Ferrous Metal Primers

Devoe: 26XX Velour Alkyd Semi-Gloss Enamel.
Glidden: 4200 Spred Ultra Semi-Gloss Enamel.
Moore: Moore's Sating Impervo Enamel #235.

Cotton or Canvas Covering Over Insulation Interior Flat Latex Emulsion Size:

Devoe: 36XX Wonder-Tones Latex Flat Wall Paint.
Glidden: 3400 Spred Satin Latex Wall Paint.
Moore: Regal Wall Sating #215.

PART 3 - EXECUTION

PREPARATION

Thoroughly clean all surfaces to be painted as required to remove all oil, grease, loose scale, rust, and foreign matter. Piping must be completely dry at the time of application. The painting of piping associated with an operating system is strictly prohibited. Site touch-up of the factory applied coating or paint, to include preparation and painting of field welds, must be completed and approved by the Engineer prior to installation of insulation (No Exceptions).

INSTALLATION

Plastic Nameplates: Secure nameplates to equipment fronts using corrosive resistant screws and rivets. Install nameplates parallel to equipment lines.

Metal Tags: Install with corrosive-resistant chain and "j-hook."

Stencil Painting: Apply single coat sufficient to cover background completely with minimum 4 mils dry film thickness.

Plastic Pipe Markers: Install in accordance with manufacturer's instructions.

Plastic Tape Pipe Markers: Install completely around pipe in accordance with manufacturer's instructions.

Underground Plastic Pipe Markers: Install 6 to 8 inches below finished grade, directly above buried pipe.

Equipment

Identify mechanical equipment scheduled on Drawings with nameplates, except of air devices, sprinkler heads, plumbing fixtures, and plumbing shock absorbers.
Identify name, number, function, capacity, and other pertinent information of air handling units, pumps, heat transfer equipment, tanks, and water treatment devices with plastic nameplates.

Controls: Identify control panels and major control components outside panels with plastic nameplates.

Valves: Identify with metal tags, ALL valves in main and branch piping connections to equipment, and all run out piping to coils with metal tags.

22-413 Jefferson County Regional
Airport Main Terminal HVAC

Fire Dampers: Label with plastic nameplates in accordance with NFPA 90A.

Piping

Paint all exposed piping, including insulated piping, in mechanical and equipment rooms with colors to meet ANSI standards. In addition, identify all piping , concealed or exposed, with plastic pipe markers or plastic tape pipe markers. Identify service, flow direction and pressure. Install in clear view and align with axis of piping. Locate identification not to exceed 10 feet on straight runs, including risers and drops, adjacent to each valve and tee at each obstruction. Provide a flow arrow at each identification marker.

Paint all exposed piping, including insulated piping, with primer and undercoat only. Provide color samples to the Architect for selection from the manufacturer's full range of standard colors. Refer to Section 090190 for finish coat compatibility.

Ductwork:

Paint all exposed ductwork with primer and undercoat only. Provide color samples to the Architect for selection from the manufacturer's full range of standard colors. Refer to Section 090190 for finish coat compatibility

Paint all ductwork, except as indicated above, with stenciled painting. Identify as to air handling unit number, zone number, and area served. Locate identification at air handling unit, at each side of all wall and floor penetrations or enclosures and at each obstruction.

Preparation:

Examine substrates and conditions under which painting is to be performed for compliance with paint application requirements. Surfaces receiving paint must be thoroughly dry before paint is applied.

Before applying paint or other surface treatments, thoroughly clean substrates of substances that could impair the bond of the various coatings. Remove all oil and grease prior to cleaning. Schedule cleaning and painting so dust and other contaminants from the cleaning process will not fall on wet, newly painted surfaces.

Clean and prepare surface to be painted according to the manufacturer's instruction for each particular substrate condition and as specified.

Clean galvanized surfaces with nonpetroleum-based solvents so that the surface is completely free of oil and surface contaminates. Remove pretreatment from galvanized sheetmetal by mechanical methods.

Do not begin to apply paint until unsatisfactory conditions have been corrected.

Start of painting will be construed as the Applicator's acceptance of surfaces and conditions within a particular area.

Application:

Apply paint to all ductwork surfaces as previously indicated, according to manufacturer's directions. Use applicators and techniques best suited or the substrate and type of material being applied.

Do not paint over dirt, rust, scale, grease, moisture, scuffed surfaces, or conditions detrimental to formation of a durable pain film.

Paint colors, surface treatments, and finishes are indicated in the schedules.

22-413 Jefferson County Regional
Airport Main Terminal HVAC

Provide primers and undercoats that are compatible with finish coats used (No Exceptions).

The number of coats and film film thickness required are the same regardless of the application method. Do not apply succeeding coats until the previous coat has cured as recommended by the manufacturer. Sand between applications where sanding is required to produce a smooth even surface according to the manufacture's directions.

Apply additional coats if undercoats, stains, or other conditions show through finish coat of point until paint film is of uniform finish, color, and appearance. Provide special attention to ensure that surfaces, including edges, corners, crevices, welds, and exposed fasteners, receive a dry film thickness equivalent to that of flat surfaces.

The term "exposed piping and ductwork surfaces" is denied to include all visible or open-to-view areas, related hangers, supports, diffusers, grilles, and other similar components. Extend coating sin these areas, as required, to maintain the system integrity and provide the desired protection.

Paint interior surfaces of all ducts, where visible through grilles, registers, or diffusers, with flat, non-specular black paint.

Minimum Coating Thickness: Apply materials no thinner than the manufacturer's recommended spreading rate. Provide the total dry film thickness of the entire system as recommended by the manufacturer or as herein specified, whichever is the greater.

Primer: Apply a minimum of two coats with a total dry film thickness of not less than 2.5 mils.

Undercoat: Apply a minimum of two coats over primer with a total dry film thickness of not less than 2.5 mils.

Lusterless (Flat) Finish: Apply a minimum of two coats over primer and undercoat with a total dry film thickness not less than 2.5 mils.

Semi-gloss Finish: Apply a minimum of two coats over primer and undercoat with a total dry film thickness not less than 3.0 mils.

Use identification of equipment on the "Record Drawings" for nameplate designations.

Attach identification for items such as special switches, etc., located in finished areas, on or in the immediate vicinity of the item.

VALVE CHART AND SCHEDULE

Provide valve chard and schedule in aluminum frame with clear plastic shield. Install on in each individual equipment room at locations as directed A.E. or Owner.

COLOR CODE FOR MARKING PIPE

MATERIAL	BAND	LETTERS AND ARROWS	LEGEND
Cold water (portable) WATER	Green	White	PORTABLE
Fire protection water (WATER)	Red	White	FIRE PR.
Hot water (domestic)	Green	White	H.W.
Hot water re-circulating (domestic)	Green	White	H.W.R.

Heating water supply	Yellow	Black	L.TW.S.
Heating water return	Yellow	Black	L.T.W.R.
Chilled water supply	Green	White	C.H.W.S.
Chilled water return	Green	White	C.H.W.R.
Treated water	Yellow	Black	TR. WATER
Chemical feed	Yellow	Black	CH. FEED
Compressed air	Yellow	Black	COMP. AIR
Natural gas	Blue	White	NAT. GAS
Vacuum	Blue	White	VAC
Fuel oil	Yellow	Black	FUEL OIL

COLOR CODE FOR MARKING SIZES

OUTSIDE DIAMETER OF PIPE COVERING (INCHES)	LENGTH OF COLOR BAND (INCHES)	ARROW LENGTH BY WIDTH (INCHES)	SIZE OF LEGEND LETTERS AND NUMBERS (INCHES)
Less than 1-1/2	8	8 x 2-1/4	1/2
1-1/ to 1-3/8	8	8 x 2-1/4	3/4
2-1/2 to 1-7/8	12	8 x 2-1/4	1-1/4
8 to 10	24	12 x 4-1/2	2-1/2
Over 10	32	12 x 4-1/2	3-1/2

END OF SECTION

SECTION 230593 - TESTING, ADJUSTING, BALANCING & COMMISSIONING FOR HVAC

PART 1 - GENERAL

RELATED DOCUMENTS

Contract Documents, General Requirements for Building Construction and Related Work, apply to work specified in this section.

SCOPE

An independent Testing, Adjusting and Balancing (TAB) Contractor accredited by AABC for the HVAC systems shall be paid by the Contractor and approved by the Owner as part of this contract. TAB services shall include HVAC systems commissioning.

This section provides for the testing, balancing, and commissioning of all systems and equipment.

These tests are required to determine that all systems and equipment involved may be safely energized and equipment.

Perform tests by and under the supervision of fully experienced and qualified personnel. Advise each respective manufacturer's representative of tests on their equipment.

Record all test data.

Each section of Division 23 that has the products or systems listed herein, incorporate this section by reference and is incomplete without the required tests stated herein.

This Section includes testing, adjusting, balancing, and commissioning HVAC systems and alarm point reporting verification to produce design objectives, including the following:

- Balancing airflow and water flow within distribution systems, including sub-mains, branches, and terminals, to indicated quantities according to specified tolerances.
- Adjusting total HVAC systems to provide indicated quantities.
- Measuring electrical performance of HVAC equipment.
- Setting quantitative performance of HVAC equipment.
- Verifying that automatic control devices are functioning properly and perform their intended functions.
- Calibrating automatic temperature control sensors.
- Commissioning the HVAC system.
- Verification of building alarm and alarm remote monitoring.

REPORTS

Submit proposed sample TAB report forms and procedures for review prior to performing TAB services for review by the Architect/ Engineer.

Submit preliminary and final Test and Balance reports to engineer for review at least 30 days prior to substantial completion of the project. Retest and rebalance as directed by engineer's review.

Submit preliminary and final commissioning reports to engineer for review at least 30 days prior to substantial completion of the project. Retest and rebalance as directed by engineer's review.

Furnish electronic copies of test data. Neatly type and arrange data. Include with the data, date tested, personnel present, weather conditions, nameplate record of test instrument and list all measurements take, both prior to and after any corrections are made to the system. Record all failures and corrective action taken to remedy incorrect situation.

Include TAB and commissioning reports in project operations and maintenance manuals.

REFERENCES

AABC National Standards for Total System Balance.

AABC Testing and Balancing Procedures.

ASHRAE Applications Handbook: Chapter 36 – Testing, Adjusting and Balancing.

ASHRAE Guideline 0 - Principles of Building Commissioning

ASHRAE Guideline 1 - HVAC Commissioning

ASHRAE Application Handbook: Chapter 46 - Sound and Vibration Control.

PART 2 - PRODUCTS

PART 3 - EXECUTION

GENERAL

Coordinate TAB and Commissioning requirements with HVAC installations. Field verify installation conditions are suitable for performance of TAB and Commissioning activities.

Provide a minimum of 72 hours prior notification for any tests to be conducted.

The TAB Contractor must witness and verify duct leakage tests.

AIR BALANCE

Balance all air distribution systems and equipment.

Comply with AABC air balancing standards and procedures.

COMMISSIONING

Commission all HVAC systems and equipment.

Comply with ASHRAE commissioning standards and procedures.

ADDITIONAL REQUIREMENTS

Verify the following:

1. Equipment is operable and in safe and normal condition.

Temperature control systems are installed complete and operable.
Proper thermal overload protection is in place for electrical equipment.
Final filters are clean and in place. If required, install temporary media in addition to final filters.
Duct systems are clean of debris.
Correct fan rotation.
Fire and volume dampers are in place and open.
Coil fins have been cleaned and combed.
Access doors are closed and duct end caps are in place.
Air outlets are installed and operable.
Duct system leakage has been minimized.
Pretest components in the VFG. Provide factory certification of testing the entire VFD with varying induction motor loads for 24 hours prior to shipment.
Proper sequencing and operation of all DDC Control System components and equipment as required by ASHRAE Standard on Total Building Mechanical System Commissioning.
Perform sound power level tests and provide required data on each occupied space adjacent to, above, or below mechanical/ air handling unit equipment rooms.
Perform vibration test and provide required data on each piece of air handling/ ventilation equipment or fan. Vibration testing must be complete in compliance with the requirements of ASHRAE – 1999 HVAC applications Handbook Chapter 46, Sound and Vibration Control and the maximum listed RMS values listed herein.

Duct Leakage

1. Test all supply air ductwork, to include, but not limited to, downstream of all single zone and multi-zone air handling units, downstream of all VAV air handling units and upstream of fan powered terminal units at 2-1/2 inches of static pressure (except where this requirement would exceed the ductwork design pressure classification) to have a total leakage value not to exceed 2% of the total system airflow.
   Test all supply, return, and exhaust air ductwork, to include, but not limited to, downstream of fan coil units and fan powered terminal units, upstream of air handling units, and upstream and downstream (where applicable) of fans at 1-1/2 inches of static pressure to have a total leakage value not to exceed 2% of the total system design airflow.
   Ductwork that initially fails these tests shall be replaced, modified, resealed, etc. as required to meet the leakage requirement and then re-tested to ensure compliances.

END OF SECTION

SECTION 23 06 20

HYDRONIC SPECIALTIES

PART 1 - GENERAL

1. 1 WORK INCLUDED

A. Air Vents

B. Air Separators

C. Strainers

D. Pump Suction Fittings

E. Relief Valves

1. 2 REFERENCES

A. ANSI/ASME - Boilers and Pressure Vessels Code.

1. 3 REGULATORY REQUIREMENTS

A. Conform to ANSI/ASME Boilers and Pressure Vessels Code Section 8D for manufacture of tanks.

1. 4 QUALITY ASSURANCE

A. Manufacturer: For each product specified, provide components by same manufacturer throughout.

1. 5 SUBMITTALS

A. Submit shop drawings and product data for manufactured products and assemblies required for this project.

B. Include component sizes, rough-in requirements, service sizes, and finishes. Include product description, model and dimensions.

C. Submit manufacturer's installation instructions.

D. Submit operation and maintenance data.

E. Include installation instruction, assembly views, lubrication instructions, and replacement parts list.

PART 2 - PRODUCTS

2. 1 AUTOMATIC AIR VENTS:

A. Provide at the highest points of the chilled water system and on the chilled water coils as shown on the Drawings, an automatic air vent, Armstrong No. 21AR or approved equal, with a pressure rating of 250 psig. Provide shut-off valve to facilitate maintenance of air vent. Locate all air vents and their discharge lines in accessible locations, preferably clustered.

2. 2 AIR SEPARATORS

A. In-line Air Separators: Cast iron for sizes 1-1/2 inch and smaller, or steel for sizes 2 inch and larger; tested and stamped in accordance with Section 8D of ANSI/ASME Code; for 125 psig operating pressure.

B. Air Elimination Valve: Bronze, float operated, for 125 psig operating pressure.

2. 3 STRAINERS:

A. Body: ASTM A 126, Class B, cast iron with bolted cover and bottom drain connection.
B. End Connections: Threaded ends for NPS 2 and smaller; flanged ends for NPS 2-1/2 and larger.
C. Strainer Screen: 60-mesh startup strainer, and perforated stainless-steel basket with 50 percent free area.
D. CWP Rating: 125 psig.

E. Each control valve for chilled water and heating water, and each pressure reducing valve assembly regardless of its size shall be preceded by a sediment strainer. The arrangement of these sediment strainers shall be such that the screens may be removed for cleaning with ease through a gasketed plug. Monel or stainless steel shall be used to fabricate the non-collapsible, lapped screens, which shall contain no soldered joints.

F. Sediment strainers shall be placed in piping systems wherever shown on the Drawings and at such other points as may be required for the removal of foreign material from the piping systems.

G. Strainers for water piping 2-1/2" and larger shall be Crane No. 989-1/2 Sediment Separators or approved equal. In piping two inches (2") and smaller, they shall be Crane No. 988-1/2, or approved equal.

H. Strainers, 2" and smaller, bronze body, screwed ends, No. 10 mesh strainer, screwed cap with bronze blow-off valve (size to be determined by standard tap size in cap). Cast iron body, 2 1/2" and larger, isolating type flanged ends where installed in copper lines, No. 7 perforated monel strainer, flanged cap with bronze ball blow-off valve (size of blow-off valve shall be determined by standard tap size in cap). Special Note: All strainers 6" and larger shall have studs mounted in the body flange in lieu of bolts for removal of cap. Baskets for strainers 6" and larger shall have stainless steel reinforcing bands at ends to prevent collapsing.

I. Full sized blow off valves shall be installed on all strainers in steam, condensate, chilled and hot water lines and a drain shall be installed from each valve to the nearest floor drain.

2. 4 GAUGES AND GAUGE CONNECTIONS:

A. Furnish and install Ashcroft No. 1279A Duragauges on both suction and discharge sides of pumps, complete with Ashcroft No. 1095 lever handle shut-off cocks, and Ashcroft No. 1106B pulsation piston type dampeners, or approved equal. Porous type will not be accepted. See pump Specifications. Gauges shall have stainless steel movement and 1/2 of 1% accuracy. Gauges shall have back connection when used on a panel; otherwise they shall have bottom connections. The graduation of the dials and the arrangement of the mechanisms shall conform to the pressure range details shown on the Drawings.

B. Combination pressure or vacuum gauges shall be Ashcroft Duragauges No. 1279AC, or approved equal. The accessories for these gauges shall conform to those prescribed for pressure gauges.

C. Furnish and install, where noted or indicated on the accompanying Drawings or called for elsewhere in these Specifications, gauge connections complete with Ashcroft No. 1095 lever handle union shutoff cocks, or approved equal. All gauge connections shall be made up with brass pipe, nipples and brass screw fittings.

2. 5 THERMOMETER AND THERMOMETER WELLS:

A. Furnish and install thermometers of not less than 9" scale complete with brass separable sockets with extension neck to allow for insulation of piping. These thermometers shall be mercury red reading type in one piece glass tubes extending from top of scale to sensor, and shall be located so that they may be easily read. Field adjustable angle thermometers are acceptable. Thermometers shall in all cases be installed upright or at the proper angle to be read while standing on the floor. The wells for thermometers shall be located in vertical pipes where possible and when necessary in horizontal pipes they shall be installed in the side and not on the top of the pipe. They shall be Weksler Industrial Thermometers, or approved equal, with range of 0 to 100 degrees F. for chilled water, and 0 to 220 degrees F for hot water.

B. Thermometer wells and thermometers shall be located where noted on the accompanying Drawings and where called for in other sections of the Specifications. Thermometer test wells only shall be installed in a vertical position in horizontal lines and at 45 degrees, in vertical lines to hold a fluid in the well.

C. Thermometer test wells shall be 3/4" Weksler Thermal Wells, brass with stem of minimum length to extend beyond the mid-diameter of the pipe, 2-1/2" extension neck, and brass screw plug. Wells shall be suitable for use of industrial type thermometers.

D. Indicating thermometers shall be placed in lines wherever shown on the Drawings. These thermometers shall be Weksler Industrial Thermometers having stainless steel separable sockets and scales of the range shown on the Drawings.

2. 6 PUMP SUCTION FITTINGS:

A. Fitting: Angle pattern, cast-iron body, threaded for 2 inch and smaller, flanged for 2-1/2 inch and larger, rated for 175 psig working pressure, with inlet vanes, cylinder strainer with 3/16 inch diameter openings, disposable fine mesh strainer to fit over cylinder strainer, and permanent magnet located in flow stream and removable for cleaning.

B. Suction diffusers shall be Paco or approved equal, cast iron body and cover, steel diffuser, and stainless steel strainer, 125 pound ASA (flat face) flange for a working pressure of 175 psi and temperature of 300°F.

C. Accessories: Adjustable foot support, blowdown tapping in bottom, gauge tapping in side.

2. 7 WATER RELIEF VALVES:

A. The pressure relief valves installed for the protection of the water circulating circuits shall be McAlear No. 307 single seated diaphragm and spring type valves with screwed connections or approved equal. They shall be 3/4" size of bronze construction with bronze seat, composition shut-off disc and rubber diaphragm.

EXECUTION

3. 1 INSTALLATION AND APPLICATION

A. Install specialties in accordance with manufacturer's instructions to permit intended performance.

B. Support tanks inside building from building structure in accordance with manufacturer's instructions.

C. Provide manual air vents at system high points and as indicated.

D. Provide manual air vents at entrance to all heating hot water coils, with a "cane" shaped discharge tube, positioned to permit draining to a portable receptacle.

E. For automatic air vents in ceiling spaces or other concealed locations, extend vent tubing to nearest drain.

F. Provide air separator on suction side of system circulation pump and connect to expansion tank.

G. Provide valved drain and hose connection on strainer blow down connection.

H. Provide pump suction fitting on suction side of base mounted centrifugal pumps. Remove temporary strainers after cleaning systems. Clean all permanent strainers after circulating systems for a minimum of 48 hours at full capacity.

I. Support pump fittings with floor mounted pipe and flange supports.

J. Provide relief valves on pressure tanks, low pressure side of reducing valves, heat exchangers, and expansion tanks.

K. Select system relief valve capacity so that it is greater than make-up pressure reducing valve capacity. Select equipment relief valve capacity to exceed rating of connected equipment.

L. Pipe relief valve outlet to nearest floor drain.

M. Where one line vents several relief valves, make cross sectional area equal to sum of individual vent areas.

END OF SECTION

This page intentionally left blank.

SECTION 230700 - HVAC INSULATION

PART 1 - GENERAL

SECTION INCLUDES

Thermal insulation for mechanical systems including piping, piping accessories, pumps, and hydronic specialties.

REFERENCES

ASTM C 178 – Steady State Heat Flux Measurements and Thermal Transmission Properties by Means of the Guarded-HOT-Plate Apparatus.

ASTM C 195 – Mineral Fiber Thermal Insulation Cement.

ASTM C 533 – Calcium Silicate Block and Pipe Thermal Insulation.

ASTM C 534 - Preformed Flexible Elastomeric Cellular Thermal Insulation.

ASTM C 547 – Mineral Fiber Preformed Pipe Insulation.

ASTM C 591 – Preformed Cellular Polyurethane Thermal Insulation.

ASTM C 1126 – Rigid Cellular Phenolic Thermal Insulation.

ASTM B 209 – Aluminum and Aluminum-alloy Sheet and Plate.

ASTM E 84 – Surface Burning Characteristics of Building Materials.

ASTM E 96 –Water Vapor Transmission of Materials.

SUBMITTALS

Include product description, list of materials, and thickness for each service and locations.

Include detail drawings of insulation dams.

QUALITY ASSURANCE

Application Company Qualifications: The installing company must be solely and exclusively in the business of insulation installation for the previous consecutive fiver year period. The installing company must also be regularly engaged in installing the specific specified insulation material types on projects of equal or greater magnitude and scope as this project for the previous consecutive five year period. Documentation of the above listed requirements must be submitted prior to insulation material submitted.

Application Personnel Qualifications: The installing company must provide qualified installation personnel on this project jobsite directly employed by them who are skilled and proficient at installing the specific specified insulation Material types.

Any material found, by the A/E, to be improperly installed or not installed in total compliance with the specific installation instructions and methods (written or implied) of the material manufacturer must be removed by the installing company. The preparation instructions must be followed prior to the re-installation of the insulation material using the correct installation instructions and methods of the material manufacturer.

All material (to include, but not limited to, insulation, jackets, facings, coatings, mastics, adhesive, sealants, etc.) Installed inside the building must have a certified and tested composite flame spread/smoke developed rating of 25/50 in accordance with ASTM E84.

ENVIRONMENTAL REQUIREMENTS

Maintain ambient temperatures and conditions required by manufacturers of adhesive and insulation.

PART 2 - PRODUCTS

MANUFACTURERS

Insulation

Ownes-Corning Fiberglass Corporation.
UpJohn CRP/DOW Chemical Company.
Manville Corporation.
FGH Fabricators, Inc. KoolPhen K Phenolic Foam Insulation.
Armstrong.
Certaineed Corporation

Jackets

Childers Products Company.
PABCO.
RFR Products, Inc.

PIPE INSULATION

Type A: " Koolphen phenolic foam 2.2 # density as manufactured by FGH Fabricators, Inc. preformed insulation: ASTM C 547; minimum 3.0 lb/cu ft density, ASTM C335, 'k' value of 0.23 at 75 degrees F; noncombustible.

Type B: Elastomer, closed cell, flexible, insulation; ASTM E 96, maximum vapor transmission rating of 0.20 pers; ASTM C 177; 'k' value of 0.27 at 75 degrees F.

JACKETS

Interior, Exposed Applications

Type A Insulation: Provide factory applied ASJ white kraft foil vapor barrier.
Type B Insulation: Finish coat is not required.
Insulated fittings, joints and valves with molded insulation of like material and thickness as adjoining pipe. Use insulating cement to fill voids and cracks. Finish with #10 glass membrane and Childers CP-30 L.O vapor barrier mastic. PVC jackets may be used with glass membrane and vapor barrier mastic.

Exterior Applications

Cover with 0.02 inch thick aluminum having integral moisture barrier with seams located at 2 or 10 o'clock position of horizontal piping. All laps must be minimum 2".

Jacket Materials

Factory Applied Jackets: White kraft bonded to reinforced foil vapor barrier with self-sealing adhesive joints.
PVC Jackets: One piece, premolded type, to meet flame spread and smoke developed rating of 25/50 in accordance with ASTM E 84.
Fiberglass Cloth Reinforcing Mesh: #10 glass cloth with minimum weight of 3.9 ounces per square yard.
Aluminum Jackets: ASTM B 209, 0.020 inch thick; smooth finish with factory applied moisture barrier.

ACCESSORIES

Insulation Bands: 3/4 inch wide; 0.015 inch thick galvanized steel, stainless steel or 0.007 inch thick aluminum.

Metal Jacket Bands: 3/8 inch wide; 0.015 inch thick aluminum or 0.010 inch thick stainless steel to match jacket.

Insulating Cement: ASTM C 195; hydraulic setting mineral wool; Ryder One-Coat.

Sealants: Used at valve, fittings and where insulation is terminated. Brush apply sealant to end of insulation and continued along pipe surface. Provide Childers CP-30 L.O. sealant.

Adhesives: Used to adhere the longitudinal lap seam of vapor barrier jackets and at butt joints between insulation or fitting covers. Provide Childers CP-82 or approved equal as general purpose adhesive. Use Childers CP-97 fibrous adhesive for calcium silicate or when adhering pipe saddles and shields to the insulation.

Primers: Provide Childers CP-50 diluted 50% with water primer to cover insulating cements prior to finish coating.

Finish: Provide Childers CP-30 L.O. as a general purpose finish to coat the longitudinal seams and butt joints of vapor barrier jackets or glass cloth jackets. Use Childers CP-50 reinforced with glass cloth as an adhesive and seizing for canvas and in other locations as indicated.

PART 3 - EXECUTION

PIPE PREPARATION

Thoroughly clean all surfaces to be insulated as required to remove all oil, grease, loose scale, rust, and foreign matter. Piping must be completely dry at the time of application. The installation of piping insulation associated with an operating chilled water system is strictly prohibited. Provide primer coat on all piping, to include field welds and over factory applied paint/ coating, in total compliance and compatible with and approved by the Engineer prior to installation of insulation (No Exceptions). Install insulation material only after all performance tests on piping have been completed and approved by the Engineer (No Exceptions).

INSTALLATION

Install materials in complete and total compliance with the specific manufacturer's installation instructions and industry best practices.

Continue vapor barrier through wall and floor penetrations.

Insulate fittings, valves, flanges and strainers. On flexible connections, expansion joints and unions, bevel and seal ends of insulation and continue sealant a minimum of 4 inches along the piping.

Provide dams in insulation at intervals not to exceed 20 feet to prevent migration of condensation or leakage.

Provide an insert of same thickness and contour as adjoining insulation, between support shield and piping, and under the finish jacket, on piping 2 1/2 inch diameter or larger, to prevent insulation form sagging at support points. Provide inserts for 180-degree arc and not less than the length of the pipe support shield or minimum 12 inches long (whichever is greater) manufactured of 5.0# density cellular phenolic insulation material suitable for the planned temperature range. Factory fabricated inserts with integral galvanized pipe saddles are recommended. Adhere pipe support shield to insulation with adhesive.

Neatly finish and seal insulation at supports, protrusions and interruptions. Maintain vapor barrier with finish coat.

Insulate and jacket all piping accessories including but not limited to fittings, valves, strainers, vents, and test ports. Provide removable sections for normal service connections.

Insulate and jacket pumps and hydronic specialties. Do not cover over equipment nameplates. Finish and seal insulation and jacketing neatly to leave nameplates exposed.

Provide a complete aluminum jacketing system for all exterior insulation installations. Unjacketed exterior piping is not acceptable.

SCHEDULE

Piping	**Type**	**Pipe Size**	**Insulation Thickness**
Exterior CHW Piping	A	4″ & Smaller	1.5″
		6″ & Larger	2″
Heating Hot Water	A	All Sizes	2″
Pumps and Hydronic Specialties	B	1/2" & Smaller	1″
		3″ & Larger	2″

END OF SECTION

SECTION 230923 - DIRECT DIGITAL CONTROL (DDC) SYSTEM FOR HVAC

PART 1 - GENERAL

SUMMARY

Delegated Design: Design and provide manufacturer's direct digital control system compatible with, coordinated with, and interfaced to air handling and terminal unit equipment provided to achieve effective and seamless control of interior space temperature and humidity.

Approved Control System Manufacturers

Johnson Controls JCI Metasys only

Control system will integrate and interface with the following HVAC system components:
Chillers and associated pumps and pumping systems.
Boilers and associated pumps and pumping systems.

Specific control points and sequences of operation shall be as indicated on drawings and equipment specifications. System shall include manufacturer's standard software features such as scheduled operation, optimized start/stop, occupied/unoccupied temperature setback, automatic alarm handling, etc.

Modify existing graphic user interface.

Include all field devices, enclosures, wiring, raceways, power supplies, and electrical power sources required for a complete and fully functional installation at no additional cost to owner.

SUBMITTALS

Product Data:

Construction details, material descriptions, dimensions of individual components and profiles, and finishes.
Operating characteristics, electrical characteristics, and furnished accessories indicating process operating range, accuracy over range, control signal over range, default control signal with loss of power, calibration data specific to each unique application, electrical power requirements, and limitations of ambient operating environment, including temperature and humidity.
Product description with complete technical data, performance curves, and product specification sheets.
Installation, operation, and maintenance instructions including factors effecting performance.
Bill of materials of indicating quantity, manufacturer, and extended model number for each unique product.

Shop Drawings:

General Requirements:

Include cover drawing with Project name, location, Owner, Architect, Contractor, and issue date with each Shop Drawings submission.

Include a drawing index sheet listing each drawing number and title that matches information in each title block.

Drawings Size: 11x17

Include plans, elevations, sections, and mounting details where applicable.
Include details of product assemblies. Indicate dimensions, weights, loads, required clearances, method of field assembly, components, and location and size of each field connection.
Detail means of vibration isolation and show attachments to rotating equipment.
Plan Drawings indicating the following:

Screened backgrounds of walls, structural grid lines, HVAC equipment, ductwork, and piping.

Room names and numbers with coordinated placement to avoid interference with control products indicated.

Each desktop workstation network port, server, gateway, router, DDC controller, control panel instrument connecting to DDC controller, and damper and valve connecting to DDC controller, if included in Project.

Exact placement of products in rooms, ducts, and piping to reflect proposed installed condition.

Network communication cable and raceway routing.

Proposed routing of wiring, cabling, conduit, and tubing; coordinated with building services for review before installation.

Schematic drawings for each controlled HVAC system indicating the following:

I/O points labeled with point names shown. Indicate instrument range, normal operating set points, and alarm set points. Indicate fail position of each damper and valve, if included in Project.

I/O listed in table format showing point name, type of device, manufacturer, model number, and cross-reference to product data sheet number.

A graphic showing location of control I/O in proper relationship to HVAC system.

Wiring diagram with each I/O point having a unique identification and indicating labels for all wiring terminals.

Unique identification of each I/O that to be consistently used between different drawings showing same point.

Elementary wiring diagrams of controls for HVAC equipment motor circuits including interlocks, switches, relays, and interface to DDC controllers.

Narrative sequence of operation.

Graphic sequence of operation, showing all inputs and output logical blocks.

Control panel drawings indicating the following:

Panel dimensions, materials, size, and location of field cable, raceways, and tubing connections.

Interior subpanel layout, drawn to scale and showing all internal components, cabling and wiring raceways, nameplates, and allocated spare space.

Front, rear, and side elevations and nameplate legend.

Unique drawing for each panel.

DDC system network riser diagram indicating the following:

Each device connected to network with unique identification for each.

Interconnection of each different network in DDC system.

For each network, indicate communication protocol, speed and physical means of interconnecting network devices, such as copper cable type, or optical fiber cable type. Indicate raceway type and size for each.

Each network port for connection of an operator workstation or other type of operator interface with unique identification for each.

DDC system electrical power riser diagram indicating the following:

Each point of connection to field power with requirements (volts/phase//hertz/amperes/connection type) listed for each.

Each control power supply including, as applicable, transformers, power-line conditioners, transient voltage suppression and high filter noise units, DC power supplies, and UPS units with unique identification for each.

Each product requiring power with requirements (volts/phase//hertz/amperes/connection type) listed for each.

Power wiring type and size, race type, and size for each.

Monitoring and control signal diagrams indicating the following:

Control signal cable and wiring between controllers and I/O.

Point-to-point schematic wiring diagrams for each product.

Control signal tubing to sensors, switches, and transmitters.

Process signal tubing to sensors, switches, and transmitters.

Sample warranty.

Operation and Maintenance Data: For DDC system.

Include the following:

22-413 Jefferson County Regional
Airport Main Terminal HVAC

Project Record Drawings of as-built versions of submittal Shop Drawings provided in electronic PDF format.

Testing and commissioning reports and checklists of completed final versions of reports, checklists, and trend logs.

As-built versions of submittal Product Data.

Names, addresses, email addresses, and 24-hour telephone numbers of Installer and service representatives for DDC system and products.

Operator's manual with procedures for operating control systems including logging on and off, handling alarms, producing point reports, trending data, overriding computer control, and changing set points and variables.

Programming manuals with description of programming language and syntax, of statements for algorithms and calculations used, of point database creation and modification, of program creation and modification, and of editor use.

Engineering, installation, and maintenance manuals that explain how to do the following:

Design and install new points, panels, and other hardware.
Perform preventive maintenance and calibration.
Debug hardware problems.
Repair or replace hardware.

Documentation of all programs created using custom programming language including set points, tuning parameters, and object database.

Backup copy of graphic files, programs, and databases on electronic media.

List of recommended spare parts with part numbers and suppliers.

Complete original-issue documentation, installation, and maintenance information for furnished third-party hardware including computer equipment and sensors.

Complete original-issue copies of furnished software, including operating systems, custom programming language, operator workstation software, and graphics software.

Licenses, guarantees, and warranty documents.

Recommended preventive maintenance procedures for system components, including schedule of tasks such as inspection, cleaning, and calibration; time between tasks; and task descriptions.

Owner training materials.

WARRANTY

Special Warranty: Manufacturer and Installer agree to repair or replace products that fail in materials or workmanship within specified warranty period.

Perform warranty service during normal business hours and commence within **8** hours of Owner's warranty service request.
Warranty Period: one year(s) from date of Substantial Completion.

PART 2 - PRODUCTS

PERFORMANCE REQUIREMENTS

Delegated Design, design DDC system to satisfy requirements indicated.

System Performance Objectives:

DDC system manages HVAC systems.

DDC system operates HVAC systems to achieve optimum operating costs while using least possible energy and maintaining specified performance.

DDC system responds to power failures, HVAC equipment failures, and adverse and emergency conditions encountered through connected I/O points.

DDC system operates while unattended by an operator and through operator interaction.

DDC system records trends and transactions of events and produces report information such as performance, energy, occupancies, and equipment operation.

DDC Data Access:

When logged into the system, operator able to also interact with any DDC controllers connected to DDC system as required for functional operation of DDC system.
Use for application configuration; for archiving, reporting, and trending of data; for operator transaction archiving and reporting; for network information management; for alarm annunciation; and for operator interface tasks and controls application management.

IDENTIFICATION

Control Equipment, Instruments, and Control Devices:

Self-adhesive label bearing unique identification.

Include instruments with unique identification identified by equipment being controlled or monitored, followed by point identification.

Raceway and Boxes:

Comply with requirements for identification specified in Section 260553 "Identification for Electrical Systems."

Equipment Warning Labels:

Self-adhesive label with pressure-sensitive adhesive back and peel-off protective jacket.
Lettering size at least 14-point type with white lettering on red background.
Warning label to read "CAUTION-Equipment operated under remote automatic control and may start or stop at any time without warning. Switch electric power disconnecting means to OFF position before servicing."

PART 3 - EXECUTION

PREINSTALLATION INTEGRATION TESTING

Perform the following pretesting of other systems and equipment integration with DDC system before field installation:

Test all communications in a controlled environment to ensure connectivity.
Load software and demonstrate functional compliance with each control sequence of operation indicated.
Using simulation, demonstrate compliance with sequences of operation and other requirements indicated including, but not limited to, the following:

HVAC equipment controlled through DDC system, such as boilers, chillers, pumps, and air-handling units.

Equipment faults and system recovery with fault annunciation.

Analog and Boolean value alarming and annunciation.

Develop a method for testing interfaces before deployment.
Submit documentation supporting compliance upon request.

CONTROL DEVICES FOR INSTALLATION BY INSTALLERS

Deliver selected control devices, specified in indicated HVAC instrumentation and control device Sections, to identified equipment and systems manufacturers for factory installation and to identified installers for field installation.

CONTROL DEVICES FOR EQUIPMENT MANUFACTURER FACTORY INSTALLATION

Deliver the following to air-handling unit manufacturer for factory installation. Include installation instructions to air-handling unit manufacturer.

Programmable application or application-specific controller.

Deliver the following to terminal unit manufacturer for factory installation. Include installation instructions to terminal unit manufacturer.

Programmable application or application-specific controller.
Electric damper actuator.
Unit-mounted flow and pressure sensors, transmitters, and transducers.
Unit-mounted temperature sensors.
Relays.

GENERAL INSTALLATION REQUIREMENTS

Install products to satisfy more stringent of all requirements indicated.

Install products level, plumb, parallel, and perpendicular with building construction.

Support products, tubing, piping wiring, and raceways.

If codes and referenced standards are more stringent than requirements indicated, comply with requirements in codes and referenced standards.

Fabricate openings and install sleeves in ceilings, floors, roof, and walls required by installation of products. Before proceeding with drilling, punching, and cutting, check for concealed work to avoid damage. Patch, flash, grout, seal, and refinish openings to match adjacent condition.

Fastening Hardware:

Wrenches, pliers, and other tools that damage surfaces of rods, nuts, and other parts are prohibited for work of assembling and tightening fasteners.
Tighten bolts and nuts firmly and uniformly. Do not overstress threads by excessive force or by oversized wrenches.
Lubricate threads of bolts, nuts, and screws with graphite and oil before assembly.

If product locations are not indicated, install products in locations that are accessible and that will permit service and maintenance from floor, equipment platforms, or catwalks without removal of permanently installed furniture and equipment.

Color Graphics Application:

Use system schematics indicated on Drawings as starting point to create graphics.
Develop Project-specific library of symbols for representing system equipment and products.
Incorporate digital images of Project-completed installation into graphics where beneficial to enhance effect.
Submit sketch of graphic layout with description of all text for each graphic for Owner's[**and Architect's**] review before creating graphic using graphics software.
Seek Owner input in graphics development once using graphics software.
Make final editing on-site with Owner's[**and Architect's**] review and feedback.
Refine graphics as necessary for Owner acceptance.
On receiving Owner acceptance, print a PDF file of each graphic and include with softcopy of DDC system operation and maintenance manual.

INSTALLATION OF CONTROLLERS

Install controllers in enclosures to comply with indicated requirements.

Connect controllers to field power supply.

Install controllers with latest version of applicable software and configure to execute requirements indicated.

Test and adjust controllers to verify operation of connected I/O to achieve performance indicated requirements while executing sequences of operation.

INSTALLATION OF ENCLOSURES

Install the following items in enclosures, to comply with indicated requirements:

Gateways.
Routers.
Controllers.
Electrical power devices.
UPS units.
Relays.
Accessories.
Instruments.
Actuators.

Attach wall-mounted enclosures to wall using the following types of steel struts:

For NEMA 250, **Type 1** Enclosures: Use **painted steel** strut and hardware.

Align **top** of adjacent enclosures **of like size**.

Install continuous and fully accessible wireways to connect conduit, wire, and cable to multiple adjacent enclosures. Wireways used for application are to have protection equal to NEMA 250 rating of connected enclosures.

ELECTRIC POWER CONNECTIONS

Connect electrical power to DDC system products requiring electrical power connections.

Design of electrical power to products not indicated with electric power is delegated to DDC system provider and installing trade to provide a fully functioning DDC system. Work is to comply with NFPA 70 and other requirements indicated.

Comply with requirements in Section 262816 "Enclosed Switches and Circuit Breakers" for electrical power circuit breakers.

Comply with requirements in Section 260519 "Low-Voltage Electrical Power Conductors and Cables" for electrical power conductors and cables.

Comply with requirements in Section 260533 "Raceway and Boxes for Electrical Systems" for electrical power raceways and boxes.

INSTALLATION OF NETWORKS

Install balanced twisted pair or copper cable as required by equipment when connecting between the following:

Gateways.
Gateways and network controllers or programmable application controllers.
Routers.
Routers and network controllers or programmable application controllers.
Network controllers and programmable application controllers.
Programmable application controllers.
Programmable application controllers and application-specific controllers.
Application-specific controllers.

22-413 Jefferson County Regional
Airport Main Terminal HVAC

Install cable in continuous raceway.

INSTALLATION OF CONTROL WIRE, CABLE, AND RACEWAY

Comply with NECA 1.

Wire and Cable Installation:

Comply with installation requirements in Section 260523 "Control-Voltage Electrical Power Cables."
Comply with installation requirements in Section 271313 "Communications Copper Backbone Cabling."
Comply with installation requirements in Section 271513 "Communications Copper Horizontal Cabling."
Install cables with protective sheathing that is waterproof and capable of withstanding continuous temperatures of 90 deg C with no measurable effect on physical and electrical properties of cable.

Provide shielding to prevent interference and distortion from adjacent cables and equipment.

Terminate wiring in a junction box.

Clamp cable over jacket in a junction box.

Individual conductors in the stripped section of cable is to be slack between the clamping point and terminal block.

Terminate field wiring and cable not directly connected to instruments and control devices having integral wiring terminals using terminal blocks.
Install signal transmission components in accordance with IEEE C2, REA Form 511a, NFPA 70, and as indicated.
Use shielded cable to transmitters.
Use shielded cable to temperature sensors.
Perform continuity and meager testing on wire and cable after installation.

Conduit Installation:

Comply with Section 260533 "Raceway and Boxes for Electrical Systems" for control-voltage conductors.
Comply with Section 270528 "Pathways for Communications Systems" for balanced twisted pair cabling and optical fiber installation.

FIELD QUALITY CONTROL

Testing Agency: **Engage** a qualified testing agency to perform tests and inspections.

Perform the following tests and inspections:

Perform each visual and mechanical inspection and electrical test stated in NETA ATS. Certify compliance with test parameters.
Test and adjust controls and safeties. Replace damaged and malfunctioning controls and equipment.

DDC SYSTEM I/O CHECKOUT PROCEDURES

Check installed products before continuity tests, leak tests, and calibration.

Check instruments for proper location and accessibility.

Check instruments for proper installation on direction of flow, elevation, orientation, insertion depth, or other applicable considerations that will impact performance.

Check instrument tubing for proper isolation, fittings, slope, dirt legs, drains, material, and support.

Control Damper Checkout:

For pneumatic control dampers, verify that pressure gauges are provided in each air line connected to the damper actuator and positioner.
Verify that control dampers are installed correctly for flow direction.
Verify that proper blade alignment, either parallel or opposed, has been provided.
Verify that damper frame attachment is properly secured and sealed.
Verify that damper actuator and linkage attachment are secure.
Verify that actuator wiring is complete, enclosed, and connected to correct power source.
Verify that damper blade travel is unobstructed.

Control Valve Checkout:
Verify that control valves are installed correctly for flow direction.
Verify that valve body attachment is properly secured and sealed.
Verify that valve actuator and linkage attachment are secure.
Verify that actuator wiring is complete, enclosed, and connected to correct power source.
Verify that valve ball, disc, or plug travel is unobstructed.
After piping systems have been tested and put into service, but before insulating and balancing, inspect each valve for leaks. Adjust or replace packing to stop leaks. Replace valve if leaks persist.

Instrument Checkout:

Verify that instrument is correctly installed for location, orientation, direction, and operating clearances.
Verify that attachment is properly secured and sealed.
Verify that conduit connections are properly secured and sealed.
Verify that wiring is properly labeled with unique identification, correct type, and size and is securely attached to proper terminals.
Inspect instrument tag against approved submittal.
For instruments with tubing connections, verify that tubing attachment is secure and isolation valves have been provided.
For flow instruments, verify that recommended upstream and downstream distances have been maintained.
For temperature instruments, verify the following:

Sensing element type and proper material.

Length and insertion.

DDC SYSTEM I/O ADJUSTMENT, CALIBRATION, AND TESTING

Calibrate each instrument installed that is not factory calibrated and provided with calibration documentation.

Provide written description of proposed field procedures and equipment for calibrating each type of instrument. Submit procedures before calibration and adjustment.

For each analog instrument, make three-point test of calibration for both linearity and accuracy.

Equipment and procedures used for calibration to comply with instrument manufacturer's written instructions.

Provide diagnostic and test equipment for calibration and adjustment.

Use field testing and diagnostic instruments and equipment with an accuracy at least twice the instrument accuracy of instrument to be calibrated. For example, test and calibrate an installed instrument with accuracy of 1 percent using field testing and diagnostic instrument with accuracy of 0.5 percent or better.

Calibrate each instrument in accordance with instruction manual supplied by instrument manufacturer.

If after calibration the indicated performance cannot be achieved, replace out-of-tolerance instruments.

Comply with field testing requirements and procedures indicated by ASHRAE's Guideline 11, "Field Testing of HVAC Controls Components," in the absence of specific requirements, and to supplement requirements indicated.

Analog Signals:

Check analog voltage signals using a precision voltage meter at zero, 50, and 100 percent.
Check analog current signals using a precision current meter at zero, 50, and 100 percent.
Check resistance signals for temperature sensors at zero, 50, and 100 percent of operating span using a precision-resistant source.

Digital Signals:

Check digital signals using a jumper wire.
Check digital signals using an ohmmeter to test for contact making or breaking.

Control Dampers:

Stroke and adjust control dampers following manufacturer's recommended procedure, from 100 percent open to 100 percent closed and back to 100 percent open.
Check and document open and close cycle times for applications with cycle time less than **30** seconds.
For control dampers equipped with positive position indication, check feedback signal at multiple positions to confirm proper position indication.

Control Valves:

Stroke and adjust control valves following manufacturer's recommended procedure, from 100 percent open to 100 percent closed and back to 100 percent open.
Check and document open and close cycle times for applications with cycle time less than **30** seconds.
For control valves equipped with positive position indication, check feedback signal at multiple positions to confirm proper position indication.

Meters: Check meters at zero, 50, and 100 percent of Project design values.

Sensors: Check sensors at zero, 50, and 100 percent of Project design values.

Switches: Calibrate switches to make or break contact at set points indicated.

Transmitters:

Check and calibrate transmitters at zero, 50, and 100 percent of Project design values.
Calibrate resistance temperature transmitters at zero, 50, and 100 percent of span using a precision-resistant source.

DDC SYSTEM CONTROLLER CHECKOUT

Verify power supply.

Verify voltage, phase, and hertz.
Verify that protection from power surges is installed and functioning.
Verify that ground fault protection is installed.
If applicable, verify if connected to UPS unit.
If applicable, verify if connected to backup power source.
If applicable, verify that power conditioning units are installed.

Verify that wire and cabling are properly secured to terminals and labeled with unique identification.

Verify that spare I/O capacity is provided.

DDC CONTROLLER I/O CONTROL LOOP TESTS

Testing:

Test every I/O point connected to DDC controller to verify that safety and operating control set points are as indicated and as required to operate controlled system safely and at optimum performance.
Test every I/O point throughout its full operating range.
Test every control loop to verify that operation is stable and accurate.
Adjust control loop proportional, integral, and derivative settings to achieve optimum performance while complying with performance requirements indicated.
Document testing of each control loop's precision and stability via trend logs.
Test and adjust every control loop for proper operation according to sequence of operation.
Test software and hardware interlocks for proper operation. Correct deficiencies.
Operate each analog point at the following:

Upper quarter of range.

Lower quarter of range.

At midpoint of range.

Exercise each binary point.
For every I/O point in DDC system, read and record each value at operator workstation, at DDC controller, and at field instrument simultaneously. Value displayed at operator workstation, at DDC controller, and at field instrument must match.
Prepare and submit report documenting results for each I/O point in DDC system and include in each I/O point a description of corrective measures and adjustments made to achieve desire results.

DDC SYSTEM VALIDATION TESTS

Perform validation tests before requesting final review of system. Before beginning testing, first submit Pretest Checklist and Test Plan.

After **approval** of Pretest Checklist and Test Plan, execute all tests and procedures indicated in plan.

After testing is complete, submit completed Pretest Checklist.

Pretest Checklist: Submit the following list with items checked off once verified:

Detailed explanation for any items that are not completed or verified.
Required mechanical installation work is successfully completed and HVAC equipment is working correctly.
HVAC equipment motors operate below full-load amperage ratings.
Required DDC system components, wiring, and accessories are installed.
Installed DDC system architecture matches approved Drawings.
Control electric power circuits operate at proper voltage and are free from faults.
Required surge protection is installed.
DDC system network communications function properly, including uploading and downloading programming changes.
Each controller's programming is backed up.
Equipment, products, tubing, wiring cable, and conduits are properly labeled.
All I/O points are programmed into controllers.
Testing, adjusting, and balancing work affecting controls is complete.
Dampers and actuators zero and span adjustments are set properly.
Valves and actuators zero and span adjustments are set properly.
Meter, sensor, and transmitter readings are accurate and calibrated.
Control loops are tuned for smooth and stable operation.
View trend data where applicable.
Each controller works properly in standalone mode.
Safety controls and devices function properly.
Interfaces with fire-alarm system function properly.
Electrical interlocks function properly.
Operator workstations and other interfaces are delivered, all system and database software is installed, and graphics are created.
Record Drawings are completed.

Test Plan:

Prepare and submit validation Test Plan including test procedures for performance validation tests.
Address all specified functions of DDC system and sequences of operation in Test Plan.
Explain detailed actions and expected results to demonstrate compliance with requirements indicated.
Explain method for simulating necessary conditions of operation used to demonstrate performance.
Include Test Checklist to be used to check and initial that each test has been successfully completed.
Submit Test Plan documentation [**10**] [**20**] <**Insert number**> business days before start of tests.

Validation Test:

Verify operating performance of each I/O point in DDC system.

Verify analog I/O points at operating value.

Make adjustments to out-of-tolerance I/O points.

Identify I/O points for future reference.
Simulate abnormal conditions to demonstrate proper function of safety devices.
Replace instruments and controllers that cannot maintain performance indicated after adjustments.

Simulate conditions to demonstrate proper sequence of control.
Readjust settings to design values and observe ability of DDC system to establish desired conditions.
24 hours after initial validation test, do as follows:

Re-check I/O points that required corrections during initial test.

Identify I/O points that still require additional correction and make corrections necessary to achieve desired results.

24 Hours after second validation test, do as follows:

Re-check I/O points that required corrections during second test.

Continue validation testing until I/O point is normal on two consecutive tests.

Completely check out, calibrate, and test all connected hardware and software to ensure that DDC system performs according to requirements indicated.
After validation testing is complete, prepare and submit report indicating results of testing. For all I/O points that required correction, indicate how many validation re-tests it took to pass. Identify adjustments made for each test and indicate instruments that were replaced.

22-413 Jefferson County Regional
Airport Main Terminal HVAC

FINAL REVIEW

Submit written request to **Commissioning Agent** when DDC system is ready for final review. State the following:

DDC system has been thoroughly inspected for compliance with Contract Documents and found to be in full compliance.
DDC system has been calibrated, adjusted, and tested and found to comply with requirements of operational stability, accuracy, speed, and other performance requirements indicated.
DDC system monitoring and control of HVAC systems results in operation according to sequences of operation indicated.
DDC system is complete and ready for final review.

Upon receipt of written request for final review, **Commissioning Agent** to start review within **reasonable period** and upon completion issue field report(s) documenting observations and deficiencies.

Take prompt action to remedy deficiencies indicated in reviewer's field report(s) and submit second written request after all deficiencies have been corrected. Repeat process until no deficiencies are reported.

Prepare and submit closeout submittals when no deficiencies are reported.

Part of DDC system final review shall to include demonstration to parties participating in final review.

Provide staff familiar with DDC system installed to demonstrate operation of DDC system during final review.
Provide testing equipment to demonstrate accuracy and other performance requirements of DDC system that is requested by reviewers during final review.
Demonstration shall include all specified functionality

ADJUSTING

Occupancy Adjustments: When requested within **12** months from date of Substantial Completion, provide on-site assistance in adjusting system to suit actual occupied conditions. Provide up to **two** visits to Project during other-than-normal occupancy hours for this purpose.

MAINTENANCE SERVICE

Beginning at Substantial Completion, verify that maintenance service includes **12** months' full maintenance by DDC system manufacturer's authorized service representative. Include preventive maintenance, repair or replacement of worn or defective components, cleaning, calibration, and adjusting as required for proper operation. Use only manufacturer's authorized replacement parts and supplies.

SOFTWARE SERVICE AGREEMENT

Technical Support: Beginning at Substantial Completion, verify that service agreement includes software support for **one** year.

Upgrade Service: At Substantial Completion, update software to latest version. Install and program software upgrades that become available within **one** year from date of Substantial Completion. Verify that upgrading software includes operating system and new or revised licenses for using software.

Upgrade Notice: No fewer than **30** days to allow Owner to schedule and access system and to upgrade computer equipment if necessary.

DEMONSTRATION

Engage a factory-authorized service representative with complete knowledge of Project-specific system installed to train Owner's maintenance personnel to adjust, operate, and maintain DDC system.

Extent of Training:

Base extent of training on scope and complexity of DDC system indicated and training requirements indicated. Provide extent of training required to satisfy requirements indicated even if more than minimum training requirements are indicated.
Inform Owner of anticipated training requirements if more than minimum training requirements are indicated.
Minimum Training Requirements:

Stagger training over multiple training classes to accommodate Owner's requirements. All training to occur before end of warranty period.

Training Schedule:

Schedule training with Owner **20** business days before expected Substantial Completion.
Training to occur within normal business hours at mutually agreed on time. Unless otherwise agreed to, training to occur Monday through Friday, except on U.S. Federal holidays, with two morning sessions and two afternoon sessions.
Provide staggered training schedule as requested by Owner.

Training Attendee List and Sign-in Sheet:

Request from Owner in advance of training a proposed attendee list with name, phone number, and email address.
Provide preprinted sign-in sheet for each training session with proposed attendees listed and no fewer than six blank spaces to add additional attendees.
Include preprinted sign-in sheet with training session number, date and time, instructor name, phone number, email address, and brief description of content to be covered during session. List attendees with columns for name, phone number, and email address and a column for attendee signature or initials.
Circulate sign-in sheet at beginning of each session and solicit attendees to sign or initial in applicable location.

END OF SECTION 230923

SECTION 232113 - HYDRONIC PIPING

PART 1 - GENERAL

RELATED DOCUMENTS

Drawings and general provisions of the Contract, including General and Supplementary Conditions and Division 01 Specification Sections, apply to this Section.

SUMMARY

This Section includes pipe and fitting materials, joining methods, special-duty valves, and specialties for the following:

Chilled and hot water piping.
Makeup-water piping.
Drain piping.
Air vent piping.
Safety valve discharge piping.

PERFORMANCE REQUIREMENTS

Hydraulic piping components and installation shall be capable of withstanding the following minimum working pressure and temperature:

Chilled and hot water Piping: 150 psig at 200 deg F.
Makeup-Water Piping: 80 psig 150 deg F
Drain Piping: 150 deg F.
Air-Vent Piping: 200 deg F.
Safety valve discharge Piping: Equal to the pressure of the piping system to which it is attached.

SUBMITTALS

Product Data: For each type of the following:
Piping
Fittings

B. Shop Drawings: Detail, at 1/4 scale, the piping layout, fabrication of pipe anchors, hangers, supports for multiple pipes, alignment guides, expansion joints and loops, and attachments of the same to the building structure. Detail location of anchors, alignment guides, and expansion joints and loops.

Welding certificates: WPS, PQR, WPQ's.

Field quality-control test reports.

Operation and Maintenance Data: For air control devices, hydronic specialties, and special-duty valves to include in emergency, operation, and maintenance manuals.

QUALITY ASSURANCE

B. Steel Support Welding: Qualify processes and operators according to AWS D1.1/D1.1M, "Structural Welding Code - Steel."

Welding: Qualify processes and operators according to ASME Boiler and Pressure Vessel Code: Section IX.

Comply with provisions in ASME B31 Series, "Code for Pressure Piping."
Certify that each welder has passed AWS qualification tests for welding processes involved and that certification is current.

ASME Compliance: Comply with ASME B31.9, "Building Services Piping," for materials, products, and installation. Safety valves and pressure vessels shall bear the appropriate ASME label. Fabricate and stamp air separators and expansion tanks to comply with ASME Boiler and Pressure Vessel Code: Section VIII, Division 01.

PART 2 - PRODUCTS

COPPER TUBE AND FITTINGS

Annealed-Temper Copper Tubing: ASTM B 88, Type K (ASTM B 88M, Type A).

Wrought-Copper Fittings: ASME B16.22.

Copper or Bronze Pressure-Seal Fittings:

Manufacturers: Subject to compliance with requirements, provide products by one of the following:

Stadler-Viega.

Housing: Copper.
O-Rings and Pipe Stops: EPDM.
Tools: Manufacturer's special tools.
Minimum 200-psigworking-pressure rating at 250 deg F.

Wrought-Copper Unions: ASME B16.22.

STEEL PIPE AND FITTINGS

B. Steel Pipe: ASTM A53 Grade B, Type E or S, or ASTM A106 Grade B, black steel with plain ends.

C. Cast-Iron Threaded Fittings: ASME B16.4; Class 125.

Malleable-Iron Threaded Fittings: ASME B16.3, Classes 150.

Malleable-Iron Unions: ASME B16.39; Classes 150.

Cast-Iron Pipe Flanges and Flanged Fittings: ASME B16.1, 125; raised ground face, and bolt holes spot faced as indicated in Part 3 "Piping Applications" Article.

Wrought-Steel Fittings: ASTM A 234/A 234M, wall thickness to match adjoining pipe.

Wrought Cast- and Forged-Steel Flanges and Flanged Fittings: ASME B16.5, including bolts, nuts, and gaskets of the following material group, end connections, and facings:

Material Group: 1.1.
End Connections: Butt welding.
Facings: Raised face.

JOINING MATERIALS

Pipe-Flange Gasket Materials: Suitable for chemical and thermal conditions of piping system contents.

ASME B16.21, nonmetallic, flat, asbestos free, 1/8-inch maximum thickness unless thickness or specific material is indicated.

Full-Face Type: For flat-face, Class 125, cast-iron and cast-bronze flanges.

Narrow-Face Type: For raised-face, Class 250, cast-iron and steel flanges.

B. Flange Bolts and Nuts: ASME B18.2.1, carbon steel, unless otherwise indicated.

Brazing Filler Metals: AWS A5.8, BCuP Series, copper-phosphorus alloys for joining copper with copper; or BAg-1, silver alloy for joining copper with bronze or steel.

Welding Filler Metals: Comply with AWS D10.12/D10.12M for welding materials appropriate for wall thickness and chemical analysis of steel pipe being welded.

Gasket Material: Thickness, material, and type suitable for fluid to be handled and working temperatures and pressures.

DIELECTRIC FITTINGS

Description: Combination fitting of copper-alloy and ferrous materials with threaded, solder-joint, plain, or weld-neck end connections that match piping system materials.

B. Insulating Material: Suitable for system fluid, pressure, and temperature.

Dielectric Unions:

Manufacturers: Subject to compliance with requirements, provide products by one of the following:

Capitol Manufacturing Company.

Central Plastics Company.

Hart Industries International, Inc.

Watts Regulator Co.; a division of Watts Water Technologies, Inc.

Zurn Plumbing Products Group; AquaSpec Commercial Products Division.

Factory-fabricated union assembly, for 250 psig minimum working pressure at 180 deg F.

Dielectric Flanges:

Manufacturers: Subject to compliance with requirements, provide products by one of the following:

Capitol Manufacturing Company.

Central Plastics Company.

Watts Regulator Co.; a division of Watts Water Technologies, Inc.

Factory-fabricated companion-flange assembly, for 150- or 300-psig minimum working pressure as required to suit system pressures.

Dielectric-Flange Kits:

Available Manufacturers: Subject to compliance with requirements, manufacturers offering products that may be incorporated into the Work include, but are not limited to, the following:
Manufacturers: Subject to compliance with requirements, provide products by one of the following:

Advance Products & Systems, Inc.

Calpico, Inc.

Central Plastics Company.

Pipeline Seal and Insulator, Inc.

Companion-flange assembly for field assembly. Include flanges, full-face- or ring-type neoprene or phenolic gasket, phenolic or polyethylene bolt sleeves, phenolic washers, and steel backing washers.
Separate companion flanges and steel bolts and nuts shall have 150- or 300-psig minimum working pressure where required to suit system pressures.

Dielectric Couplings:

Manufacturers: Subject to compliance with requirements, provide products by one of the following:

Calpico, Inc.

Lochinvar Corporation.

Galvanized-steel coupling with inert and noncorrosive thermoplastic lining; threaded ends; and 300-psig minimum working pressure at 225 deg F.

Dielectric Nipples:

Manufacturers: Subject to compliance with requirements, provide products by one of the following:

Perfection Corporation; a subsidiary of American Meter Company.

Precision Plumbing Products, Inc.

Sioux Chief Manufacturing Company, Inc.

Victaulic Company of America.

Electroplated steel nipple with inert and noncorrosive, thermoplastic lining; plain, threaded, or grooved ends; and 300 psig minimum working pressure at 225 deg F.

VALVES

Gate, Globe, Check, Ball, and Butterfly Valves: Comply with requirements specified in Division 23 Section "General-Duty Valves for HVAC Piping."

B. Automatic Temperature-Control Valves, Actuators, and Sensors: Comply with requirements specified in Division 23 Section "Instrumentation and Control for HVAC."

Bronze, Calibrated-Orifice, Balancing Valves:

Available Manufacturers: Subject to compliance with requirements, manufacturers offering products that may be incorporated into the Work include, but are not limited to, the following:

Armstrong Pumps, Inc.

Bell & Gossett Domestic Pump; a division of ITT Industries.

Flow Design Inc.

Gerand Engineering Co.

Griswold Controls.

Taco.

Body: Bronze, ball or plug type with calibrated orifice or venturi.
Ball: Brass or stainless steel.
Plug: Resin.
Seat: PTFE.
End Connections: Threaded or socket.
Pressure Gage Connections: Integral seals for portable differential pressure meter.
Handle Style: Lever, with memory stop to retain set position.
CWP Rating: Minimum 125 psig.
Maximum Operating Temperature: 250 deg F.

Cast-Iron or Steel, Calibrated-Orifice, Balancing Valves:

Available Manufacturers: Subject to compliance with requirements, manufacturers offering products that may be incorporated into the Work include, but are not limited to, the following:

Armstrong Pumps, Inc.

Bell & Gossett Domestic Pump; a division of ITT Industries.

Flow Design Inc.

Gerand Engineering Co.

Griswold Controls.

Taco.

Tour & Andersson; available through Victaulic Company of America.

Body: Cast-iron or steel body, ball, plug, or globe pattern with calibrated orifice or venturi.
Ball: Brass or stainless steel.
Stem Seals: EPDM O-rings.
Disc: Glass and carbon-filled PTFE.
Seat: PTFE.
End Connections: Flanged or grooved.
Pressure Gage Connections: Integral seals for portable differential pressure meter.

Handle Style: Lever, with memory stop to retain set position.
CWP Rating: Minimum 125 psig.
Maximum Operating Temperature: 250 deg F.

Diaphragm-Operated, Pressure-Reducing Valves:

Available Manufacturers: Subject to compliance with requirements, manufacturers offering products that may be incorporated into the Work include, but are not limited to, the following:

Amtrol, Inc.

Armstrong Pumps, Inc.

Bell & Gossett Domestic Pump; a division of ITT Industries.

Conbraco Industries, Inc.

Spence Engineering Company, Inc.

Watts Regulator Co.; a division of Watts Water Technologies, Inc.

Body: Bronze or brass.
Disc: Glass and carbon-filled PTFE.
Seat: Brass.
Stem Seals: EPDM O-rings.
Diaphragm: EPT.
Low inlet-pressure check valve.
Inlet Strainer, removable without system shutdown.
Valve Seat and Stem: Non-corrosive.
Valve Size, Capacity, and Operating Pressure: Selected to suit system in which installed, with operating pressure and capacity factory set and field adjustable.

Diaphragm-Operated Safety Valves:

Available Manufacturers: Subject to compliance with requirements, manufacturers offering products that may be incorporated into the Work include, but are not limited to, the following:

Amtrol, Inc.

Armstrong Pumps, Inc.

Bell & Gossett Domestic Pump; a division of ITT Industries.

Conbraco Industries, Inc.

Spence Engineering Company, Inc.

Watts Regulator Co.; a division of Watts Water Technologies, Inc.

Body: Bronze or brass.
Disc: Glass and carbon-filled PTFE.
Seat: Brass.
Stem Seals: EPDM O-rings.
Diaphragm: EPT.
Wetted, Internal Work Parts: Brass and rubber.
Inlet Strainer: removable without system shutdown.
Valve Seat and Stem: Noncorrosive.

Valve Size, Capacity, and Operating Pressure: Comply with ASME Boiler and Pressure Vessel Code: Section IV, and selected to suit system in which installed, with operating pressure and capacity factory set and field adjustable.

AIR CONTROL DEVICES

Available Manufacturers: Subject to compliance with requirements, manufacturers offering products that may be incorporated into the Work include, but are not limited to, the following:

Amtrol, Inc.
Armstrong Pumps, Inc.
Bell & Gossett Domestic Pump; a division of ITT Industries.
Taco.

Manual Air Vents:

Body: Bronze.
Internal Parts: Nonferrous.
Operator: Screwdriver or thumbscrew.
Inlet Connection: NPS 1/2.
Discharge Connection: NPS 1/8.
CWP Rating: 150 psig.
Maximum Operating Temperature: 225 deg F.

Automatic Air Vents:

Body: Bronze or cast iron.
Internal Parts: Nonferrous.
Operator: Noncorrosive metal float.
Inlet Connection: NPS 1/2.
Discharge Connection: NPS 1/4.
CWP Rating: 150 psig.
Maximum Operating Temperature: 240 deg F.

HYDRONIC PIPING SPECIALTIES

Spherical, Rubber, Flexible Connectors:

Body: Fiber-reinforced rubber body.
End Connections: Steel flanges drilled to align with Classes 150 and 300 steel flanges.
Performance: Capable of misalignment.
CWP Rating: 150 psig.
Maximum Operating Temperature: 250 deg F.

PART 3 - EXECUTION

PIPING APPLICATIONS

Chilled-water and Hot Water piping, aboveground, NPS 2 and smaller, shall be the following:

Type K drawn-temper copper tubing, wrought-copper fittings, and brazed or press-fit joints.

Schedule 40 steel pipe; Class 150, malleable-iron fittings; cast-iron flanges and flange fittings; and threaded joints.

Chilled-water and Hot Water piping, aboveground, NPS 2-1/2 and larger, shall be the following:

Schedule 40 steel pipe, wrought-steel fittings and wrought-cast or forged-steel flanges and flange fittings, and welded and flanged joints.

Makeup-water piping installed aboveground shall be the following:

Type K drawn-temper copper tubing, wrought-copper fittings, and brazed or pressed joints.
Schedule 40 steel pipe; Class 150, malleable-iron fittings; cast-iron flanges and flange fittings; and threaded joints.

Makeup-Water Piping Installed Belowground and within Slabs: Type K, annealed-temper copper tubing, wrought-copper fittings, and soldered joints. Use the fewest possible joints.

Drain Piping: Type M, drawn-temper copper tubing, wrought-copper fittings, and soldered joints.

Air-Vent Piping:

Inlet: Same as service where installed.
Outlet: Type M, annealed-temper copper tubing with soldered or flared joints.

Safety Valve Discharge Piping: Same materials and joining methods as for piping specified for the service in which safety valve is installed.

VALVE APPLICATIONS

Install shutoff-duty valves at each branch connection to supply mains, and at supply connection to each piece of equipment.

B. Install calibrated-orifice and balancing valves as indicated.

Install check valves at each pump discharge and elsewhere as required to control flow direction.

Install safety valves at hot-water generators and elsewhere as required by ASME Boiler and Pressure Vessel Code. Install drip-pan elbow on safety-valve outlet and pipe without valves to the outdoors; and pipe drain to nearest floor drain or as indicated on Drawings. Comply with ASME Boiler and Pressure Vessel Code: Section VIII, Division 1, for installation requirements.

Install pressure-reducing valves at makeup-water connection to regulate system fill pressure.

PIPING INSTALLATIONS

Drawing plans, schematics, and diagrams indicate general location and arrangement of piping systems. Indicate piping locations and arrangements if such were used to size pipe and calculate friction loss, expansion, pump sizing, and other design considerations. Install piping as indicated unless deviations to layout are approved on Coordination Drawings.

B. Install piping in concealed locations, unless otherwise indicated and except in equipment rooms and service areas.

Install piping indicated to be exposed and piping in equipment rooms and service areas at right angles or parallel to building walls. Diagonal runs are prohibited unless specifically indicated otherwise.

Install piping above accessible ceilings to allow sufficient space for ceiling panel removal.

Install piping to permit valve servicing.

Install piping at indicated slopes.

Install piping free of sags and bends.

Install fittings for changes in direction and branch connections.

Install piping to allow application of insulation.

Select system components with pressure rating equal to or greater than system operating pressure.

Install groups of pipes parallel to each other, spaced to permit applying insulation and servicing of valves.

Install drains, consisting of a tee fitting, NPS 3/4 ball valve, and short NPS 3/4 threaded nipple with cap, at low points in piping system mains and elsewhere as required for system drainage.

Install piping at a uniform grade of 0.2 percent upward in direction of flow.

Reduce pipe sizes using eccentric reducer fitting installed with level side up.

Install branch connections to mains using tee fittings in main pipe, with the branch connected to the bottom of the main pipe. For up-feed risers, connect the branch to the top of the main pipe.

Install valves according to Division 23 Section "General-Duty Valves for HVAC Piping."

Install unions in piping, NPS 2 and smaller, adjacent to valves, at final connections of equipment, and elsewhere as indicated.

Install flanges in piping, NPS 2-1/2 and larger, at final connections of equipment and elsewhere as indicated.

Install strainers on inlet side of each control valve, pressure-reducing valve, solenoid valve, in-line pump, and elsewhere as indicated. Install NPS 3/4 nipple and ball valve in blowdown connection of strainers NPS 2 and larger. Match size of strainer blowoff connection for strainers smaller than NPS 2.

Install expansion loops, expansion joints, anchors, and pipe alignment guides as specified in Division 23 Section "Expansion Fittings and Loops for HVAC Piping."

Identify piping as specified in Division 23 Section "Identification for HVAC Piping and Equipment."

HANGERS AND SUPPORTS

Hanger, support, and anchor devices are specified in Division 23 Section "Hangers and Supports for HVAC Piping and Equipment." Comply with the following requirements for maximum spacing of supports.

B. Seismic restraints are specified in Division 23 Section "Vibration and Seismic Controls for HVAC Piping and Equipment."

Install the following pipe attachments:

Adjustable steel clevis hangers for individual horizontal piping less than 20 feet (6 m) long.
Adjustable roller hangers and spring hangers for individual horizontal piping 20 feet (6 m) or longer.
Pipe Roller: MSS SP-58, Type 44 for multiple horizontal piping 20 feet (6 m) or longer, supported on a trapeze.
Spring hangers to support vertical runs.
Provide copper-clad hangers and supports for hangers and supports in direct contact with copper pipe.
On plastic pipe, install pads or cushions on bearing surfaces to prevent hanger from scratching pipe.

Install hangers for drawn-temper copper piping with the following maximum spacing and minimum rod sizes:

NPS 3/4: Maximum span, 5 feet; minimum rod size, 1/4 inch.
NPS 1: Maximum span, 6 feet; minimum rod size, 1/4 inch.
NPS 1-1/2: Maximum span, 8 feet; minimum rod size, 3/8 inch.
NPS 2: Maximum span, 8 feet; minimum rod size, 3/8 inch.
NPS 2-1/2: Maximum span, 9 feet; minimum rod size, 3/8 inch.
NPS 3: Maximum span, 10 feet; minimum rod size, 3/8 inch.

Support vertical runs at roof, at each floor, and at 10-foot intervals between floors.

PIPE JOINT CONSTRUCTION

Join pipe and fittings according to the following requirements and Division 23 Sections specifying piping systems.

B. Ream ends of pipes and tubes and remove burrs. Bevel plain ends of steel pipe.

Remove scale, slag, dirt, and debris from inside and outside of pipe and fittings before assembly.

Soldered Joints: Apply ASTM B 813, water-flushable flux, unless otherwise indicated, to tube end. Construct joints according to ASTM B 828 or CDA's "Copper Tube Handbook," using lead-free solder alloy complying with ASTM B 32.

Brazed Joints: Construct joints according to AWS's "Brazing Handbook," "Pipe and Tube" Chapter, using copper-phosphorus brazing filler metal complying with AWS A5.8.

Threaded Joints: Thread pipe with tapered pipe threads according to ASME B1.20.1. Cut threads full and clean using sharp dies. Ream threaded pipe ends to remove burrs and restore full ID. Join pipe fittings and valves as follows:

Apply appropriate tape or thread compound to external pipe threads unless dry seal threading is specified.
Damaged Threads: Do not use pipe or pipe fittings with threads that are corroded or damaged. Do not use pipe sections that have cracked or open welds.

Welded Joints: Construct joints according to AWS D10.12/D10.12M, using qualified processes and welding operators according to Part 1 "Quality Assurance" Article.

Flanged Joints: Select appropriate gasket material, size, type, and thickness for service application. Install gasket concentrically positioned. Use suitable lubricants on bolt threads.

Grooved Joints: Assemble joints with coupling and gasket, lubricant, and bolts. Cut or roll grooves in ends of pipe based on pipe and coupling manufacturer's

written instructions for pipe wall thickness. Use grooved-end fittings and rigid, grooved-end-pipe couplings.

HYDRONIC SPECIALTIES INSTALLATION

Install manual air vents at high points in piping, at heat-transfer coils, and elsewhere as required for system air venting.

B. Install automatic air vents at high points of system piping in mechanical equipment rooms only. Manual vents at heat-transfer coils and elsewhere as required for air venting.

Install piping from boiler air outlet, air separator, or air purger to expansion tank with a 2 percent upward slope toward tank.

Install in-line air separators in pump suction. Install drain valve on air separators NPS 2 and larger.

Install tangential air separator in pump suction. Install blowdown piping with gate or full-port ball valve; extend full size to nearest floor drain.

Install bypass chemical feeders in each hydronic system where indicated, in upright position with top of funnel not more than 48 inches above the floor. Install feeder in minimum NPS 3/4 bypass line, from main with full-size, full-port, ball valve in the main between bypass connections. Install NPS 3/4 pipe from chemical feeder drain, to nearest equipment drain and include a full-size, full-port, ball valve.

Install expansion tanks on the floor. Vent and purge air from hydronic system, and ensure tank is properly charged with air to suit system Project requirements.

EQUIPMENT CONNECTIONS

Sizes for supply and return piping connections shall be the same as or larger than equipment connections.

B. Install control valves in accessible locations close to connected equipment.

Install bypass piping with globe valve around control valve. If parallel control valves are installed, only one bypass is required.

Install ports for pressure gages and thermometers at coil inlet and outlet connections according to Division 23 Section "Meters and Gages for HVAC Piping."

FIELD QUALITY CONTROL

Prepare hydronic piping according to ASME B31.9 and as follows:

Leave joints, including welds, un-insulated and exposed for examination during test.
Provide temporary restraints for expansion joints that cannot sustain reactions due to test pressure. If temporary restraints are impractical, isolate expansion joints from testing.
Flush hydronic piping systems with clean water; then remove and clean or replace strainer screens.
Isolate equipment from piping. If a valve is used to isolate equipment, its closure shall be capable of sealing against test pressure without damage to valve. Install blinds in flanged joints to isolate equipment.
Install safety valve, set at a pressure no more than one-third higher than test pressure, to protect against damage by expanding liquid or other source of overpressure during test.

B. Perform the following tests on hydronic piping:

Use ambient temperature water as a testing medium unless there is risk of damage due to freezing. Another liquid that is safe for workers and compatible with piping may be used.
While filling system, use vents installed at high points of system to release air. Use drains installed at low points for complete draining of test liquid.
Isolate expansion tanks and determine that hydronic system is full of water.
Subject piping system to hydrostatic test pressure that is not less than 1.5 times the system's working pressure. Test pressure shall not exceed maximum pressure for any vessel, pump, valve, or other component in system under test. Verify that stress due to pressure at bottom of vertical runs does not exceed 90 percent of specified minimum yield strength or 1.7 times "SE" value in Appendix A in ASME B31.9, "Building Services Piping."
After hydrostatic test pressure has been applied for at least 10 minutes, examine piping, joints, and connections for leakage. Eliminate leaks by tightening, repairing, or replacing components, and repeat hydrostatic test until there are no leaks.
Prepare written report of testing.

Perform the following before operating the system:

Open manual valves fully.
Inspect pumps for proper rotation.
Set makeup pressure-reducing valves for required system pressure.
Inspect air vents at high points of system and determine if all are installed and operating freely (automatic type), or bleed air completely (manual type).
Set temperature controls so all coils are calling for full flow.
Inspect and set operating temperatures of hydronic equipment, such as boilers, chillers, cooling towers, to specified values.
Verify lubrication of motors and bearings.

END OF SECTION 232113

SECTION 232123 - HYDRONIC PUMPS

PART 1 - GENERAL

RELATED DOCUMENTS

Drawings and general provisions of the Contract, including General and Supplementary Conditions and Division 01 Specification Sections, apply to this Section.

SUMMARY

This Section includes the following:

Close-coupled, in-line centrifugal pumps.
Close-coupled, end-suction centrifugal pumps.
Separately coupled, base-mounted, end-suction centrifugal pumps.

DEFINITIONS

Buna-N: Nitrile rubber.

EPT: Ethylene propylene terpolymer.

SUBMITTALS

Product Data: Include certified performance curves and rated capacities, operating characteristics, furnished specialties, final impeller dimensions, and accessories for each type of product indicated. Indicate pump's operating point on curves.

Shop Drawings: Show pump layout and connections. Include setting drawings with templates for installing foundation and anchor bolts and other anchorages.

Wiring Diagrams: Power, signal, and control wiring.

Operation and Maintenance Data: For pumps to include in emergency, operation, and maintenance manuals.

QUALITY ASSURANCE

Source Limitations: Obtain hydronic pumps through one source from a single manufacturer.

Product Options: Drawings indicate size, profiles, and dimensional requirements of hydronic pumps and are based on the specific system indicated. Refer to Division 01 Section "Product Requirements."

Electrical Components, Devices, and Accessories: Listed and labeled as defined in NFPA 70, Article 100, by a testing agency acceptable to authorities having jurisdiction, and marked for intended use.

UL Compliance: Comply with UL 778 for motor-operated water pumps.

DELIVERY, STORAGE, AND HANDLING

Manufacturer's Preparation for Shipping: Clean flanges and exposed machined metal surfaces and treat with anticorrosion compound after assembly and testing.

Protect flanges, pipe openings, and nozzles with wooden flange covers or with screwed-in plugs.

Store pumps in dry location.

Retain protective covers for flanges and protective coatings during storage.

Protect bearings and couplings against damage from sand, grit, and other foreign matter.

Comply with pump manufacturer's written rigging instructions.

COORDINATION

Coordinate size and location of concrete bases.

EXTRA MATERIALS

Furnish extra materials described below that match products installed and that are packaged with protective covering for storage and identified with labels describing contents.

Mechanical Seals: One mechanical seal(s) for each pump.

PART 2 - PRODUCTS

MANUFACTURERS

In other Part 2 articles where titles below introduce lists, the following requirements apply to product selection:

Manufacturers: Subject to compliance with requirements, provide products by one of the manufacturers specified.

CLOSE-COUPLED, IN-LINE CENTRIFUGAL PUMPS

Available Manufacturers:

Armstrong Pumps Inc.
Aurora Pump; Division of Pentair Pump Group.
Bell & Gossett; Div. of ITT Industries.
Grundfos Pumps Corporation.
Little Giant Pump Co.; Subsidiary of Tecumseh Products Co.
PACO Pumps.
Peerless Pump; a Member of the Sterling Fluid Systems Group.
Taco, Inc.
Weinman; Div. of Crane Pumps & Systems.

Description: Factory-assembled and -tested, centrifugal, overhung-impeller, close-coupled, in-line pump as defined in HI 1.1-1.2 and HI 1.3; designed for installation with pump and motor shafts mounted horizontally or vertically. Rate pump for 125-psig minimum working pressure and a continuous water temperature of 200 deg F

Pump Construction:

Casing: Radially split, cast iron, with threaded gage tappings at inlet and outlet, and threaded companion-flange connections.
Impeller: ASTM B 584, cast bronze; statically and dynamically balanced, keyed to shaft, and secured with a locking cap screw. Trim impeller to match specified performance.
Pump Shaft: Stainless steel.
Mechanical Seal: Carbon rotating ring against a ceramic seat held by a stainless-steel spring, and Buna-N bellows and gasket. Include water slinger on shaft between motor and seal.
Packing Seal: Stuffing box, with a minimum of four rings of graphite-impregnated braided yarn with bronze lantern ring between center two graphite rings, and bronze packing gland.
Pump Bearings: Permanently lubricated ball bearings
Permanently lubricated ball bearings are available up through 5 hp. Larger motors have grease-lubricated ball bearings.

Motor: Single speed, with permanently lubricated ball bearings, unless otherwise indicated; and rigidly mounted to pump casing. Select motor horsepower for non-overloading service throughout the full flow range of pump impeller provided. Comply with requirements in Division 23 Section "Common Motor Requirements for HVAC Equipment."

CLOSE-COUPLED, END-SUCTION CENTRIFUGAL PUMPS

Manufacturers:

American-Marsh Pumps.
Armstrong Pumps Inc.
Aurora Pump; Division of Pentair Pump Group.
Bell & Gossett; Div. of ITT Industries.
Goulds Pumps; Water Technologies Group.
PACO Pumps.
Patterson Pump Co.; a Subsidiary of The Gorman-Rupp Co.
Peerless Pump; a Member of the Sterling Fluid Systems Group.
Taco, Inc.
Weinman; Div. of Crane Pumps & Systems.

Description: Factory-assembled and -tested, centrifugal, overhung-impeller, close-coupled, end-suction pump as defined in HI 1.1-1.2 and HI 1.3; designed for installation with pump and motor shafts mounted horizontally. Rate pump for 125-psig minimum working pressure and a continuous water temperature of 225 deg F. Provide pumps with matching suction diffuser.

Pump Construction:

Casing: Radially split, cast iron, with replaceable bronze wear rings, drain plug at bottom and air vent at top of volute, threaded gage tappings at inlet and outlet, and flanged connections.
Impeller: ASTM B 584, cast bronze; statically and dynamically balanced, keyed to shaft, and secured with a locking cap screw. Trim impeller to match specified performance.
Pump Shaft: Stainless steel.
Mechanical Seal: Carbon rotating ring against a ceramic seat held by a stainless-steel spring, and Buna-N bellows and gasket. Include water slinger on shaft between motor and seal.
Pump Bearings: Permanently lubricated ball bearings.

Motor: Single speed, with grease-lubricated ball bearings, unless otherwise indicated; rigidly mounted to pump casing with integral pump support. Select motor horsepower for non-overloading service throughout the full flow range of pump impeller provided. Comply with requirements in Division 23 Section for HVAC Equipment.

SEPARATELY COUPLED, BASE-MOUNTED, END-SUCTION CENTRIFUGAL PUMPS

Manufacturers:

American-Marsh Pumps.
Armstrong Pumps Inc.
Aurora Pump; Division of Pentair Pump Group.
Bell & Gossett; Div. of ITT Industries.
PACO Pumps.
Scot Pump; Div. of Ardox Corp.
Taco, Inc.
Weinman; Div. of Crane Pumps & Systems.

Description: Factory-assembled and -tested, centrifugal, overhung-impeller, separately coupled, end-suction pump as defined in HI 1.1-1.2 and HI 1.3; designed for base mounting, with pump and motor shafts horizontal. Rate pump for 125-psig minimum working pressure and a continuous water temperature of 225 deg F. Provide pumps with matching suction diffuser.

Pump Construction:

Casing: Radially split, cast iron, with replaceable bronze wear rings, threaded gage tappings at inlet and outlet, drain plug at bottom and air vent at top of volute, and flanged connections. Provide integral mount on volute to support the casing, and attached piping to allow removal and replacement of impeller without disconnecting piping or requiring the realignment of pump and motor shaft.
Impeller: ASTM B 584, cast bronze; statically and dynamically balanced, keyed to shaft, and secured with a locking cap screw. Trim impeller to match specified performance.
Pump Shaft: [Stainless steel].
Mechanical Seal: Carbon rotating ring against a ceramic seat held by a stainless-steel spring, and Buna-N bellows and gasket.
Packing Seal: Stuffing box, with a minimum of four rings of graphite-impregnated braided yarn with bronze lantern ring between center two graphite rings, and bronze packing gland.
Pump Bearings: Grease-lubricated ball bearings contained in cast-iron housing with grease fittings.

Shaft Coupling: Molded rubber insert and interlocking spider capable of absorbing vibration. EPDM coupling sleeve for variable-speed applications.

Coupling Guard: Dual rated; ANSI B15.1, Section 8; OSHA 1910.219 approved; steel; removable; attached to mounting frame.

Mounting Frame: Welded-steel frame and cross members, factory fabricated from ASTM A 36/A 36M channels and angles. Fabricate to mount pump casing, coupling guard, and motor.

Motor: Single speed, with grease-lubricated ball bearings, unless otherwise indicated; secured to mounting frame, with adjustable alignment. Select motor horsepower for non-overloading service throughout the full flow range of pump

impeller provided. Comply with requirements in Division 23 Section "Common Motor Requirements for HVAC Equipment."

PART 3 - EXECUTION

EXAMINATION

Examine equipment foundations and anchor-bolt locations for compliance with requirements for installation tolerances and other conditions affecting performance of work.

Examine roughing-in for piping systems to verify actual locations of piping connections before pump installation.

Examine foundations and inertia bases for suitable conditions where pumps are to be installed.

Proceed with installation only after unsatisfactory conditions have been corrected.

CONCRETE BASES

Install concrete bases of dimensions indicated for pumps and controllers. Refer to Division 23 Section "Common Work Results for HVAC."

Install dowel rods to connect concrete base to concrete floor. Unless otherwise indicated, install dowel rods on 18-inch centers around full perimeter of base.
For supported equipment, install epoxy-coated anchor bolts that extend through concrete base and anchor into structural concrete floor.
Place and secure anchorage devices. Use setting drawings, templates, diagrams, instructions, and directions furnished with items to be embedded.
Install anchor bolts to elevations required for proper attachment to supported equipment.

Cast-in-place concrete materials and placement requirements are specified in Division 03.

PUMP INSTALLATION

Install pumps with access for periodic maintenance including removal of motors, impellers, couplings, and accessories.

Independently support pumps and piping so weight of piping is not supported by pumps and weight of pumps is not supported by piping.

Install continuous-thread hanger rods and spring hangers of sufficient size to support pump weight. Vibration isolation devices are specified in Division 23 Section "Vibration Controls for HVAC Piping and Equipment." Fabricate brackets or supports as required. Hanger and support materials are specified in Division 23 Section "Hangers and Supports for HVAC Piping and Equipment."

Suspend vertically mounted, in-line centrifugal pumps independent of piping. Install pumps with motor and pump shafts vertical. Use continuous-thread hanger rods and spring hangers of sufficient size to support pump weight. Vibration isolation devices are specified in Division 21 Section "Vibration and Seismic Controls for Fire-Suppression Piping and Equipment." Hanger and support materials are specified in Division 22 Section "Hangers and Supports for Plumbing Piping and Equipment/Hangers and Supports for HVAC Piping and Equipment."

Set base-mounted pumps on concrete foundation. Disconnect coupling before setting. Do not reconnect couplings until alignment procedure is complete.

Support pump base plate on rectangular metal blocks and shims, or on metal wedges with small taper, at points near foundation bolts to provide a gap of 3/4 to 1-1/2 inches between pump base and foundation for grouting.
Adjust metal supports or wedges until pump and driver shafts are level. Check coupling faces and suction and discharge flanges of pump to verify that they are level and plumb.

Automatic Condensate Pump Units: Install units for collecting condensate and extend to open drain.

ALIGNMENT

Align pump and motor shafts and piping connections after setting on foundation, grout has been set and foundation bolts have been tightened, and piping connections have been made.

Comply with pump and coupling manufacturers' written instructions.

Adjust pump and motor shafts for angular and offset alignment by methods specified in HI 1.1-1.5, "Centrifugal Pumps for Nomenclature, Definitions, Application and Operation. "

After alignment is correct, tighten foundation bolts evenly but not too firmly. Completely fill base plate with non-shrink, nonmetallic grout while metal blocks and shims or wedges are in place. After grout has cured, fully tighten foundation bolts.

CONNECTIONS

Piping installation requirements are specified in other Division 23 Sections. Drawings indicate general arrangement of piping, fittings, and specialties.

Install piping adjacent to machine to allow service and maintenance.

Connect piping to pumps. Install valves that are same size as piping connected to pumps.

Install suction and discharge pipe sizes equal to or greater than diameter of pump nozzles.

Install check valve and throttling valve on discharge side of pumps.

Install Y-type strainer and shutoff valve on suction side of pumps.

Install flexible connectors on suction and discharge sides of base-mounted pumps between pump casing and valves.

Install pressure gages on pump suction and discharge, at integral pressure-gage tapping, or install single gage with multiple input selector valve.

Ground equipment according to Division 26 Section "Grounding and Bonding for Electrical Systems."

Connect wiring according to Division 26 Section "Low-Voltage Electrical Power Conductors and Cables."

STARTUP SERVICE

Engage a factory-authorized service representative to perform startup service.

Complete installation and startup checks according to manufacturer's written instructions.
Check piping connections for tightness.
Clean strainers on suction piping.
Perform the following startup checks for each pump before starting:

Verify bearing lubrication.

Verify that pump is free to rotate by hand and that pump for handling hot liquid is free to rotate with pump hot and cold. If pump is bound or drags, do not operate until cause of trouble is determined and corrected.

Verify that pump is rotating in the correct direction.

Prime pump by opening suction valves and closing drains, and prepare pump for operation.
Start motor.
Open discharge valve slowly.

DEMONSTRATION

Engage a factory-authorized service representative to train Owner's maintenance personnel to adjust, operate, and maintain hydronic pumps. Refer to Division 01 Section "Demonstration and Training."

END OF SECTION

SECTION 232500 - HVAC WATER TREATMENT

PART 1 - GENERAL

SECTION INCLUDES

Furnish and install water treatment for HVAC piping systems; including:

Cleaning pf piping systems.
Chemical feeder equipment.
Treatment for closed systems.

SUBMITTALS

Water treatment plan indicating proposed products, procedures, and target chemical concentrations.

Include product data for all chemical treatment materials, chemicals and equipment.

Include manufacturer's installation instructions.

Provide operation and maintenance manual.

QUALITY ASSURANCE

Manufacturer Qualifications: Company specializing in manufacturing the products specified in this section with minimum ten year's documented experience with local representative with water analysis laboratories and full-time service personnel with a 50 mile radius of the site.

Conform to applicable EPA code for addition of toxic, legally prohibited chemicals to building mechanical systems and for delivery to public sewage systems.

MAINTENANCE SERVICE

Provide service and maintenance of treatment systems for one year form Date of Substantial Completion.

Provide monthly technical service visits to perform field inspections and make water analysis on site. Detail findings in writing on proper practices, chemical treating requirements, and corrective actions needed. Submit tow copies of field service report after each visit.

Provide laboratory and technical assistance services for warranty period.

Include two eight hour training courses for operating personnel, instructing them on installation, care, maintenance, testing and operation of water treatment systems. Arrange course at start-up of systems.

Provide site inspections of equipment during scheduled or emergency shutdown to properly.

Evaluate success of water treatment program, and make recommendations in writing based upon these inspections.

Provide sufficient chemicals for treatment and testing during warranty period.

PART 2 - PRODUCTS

MATERIALS

System Cleaner

Liquid alkaline compound with emulsifying agents and detergents to remove grease and petroleum products.
Algicide; chlorine release agents such as sodium hypochlorite or calcium hypochlorite.
Muriatic acid to remove mill scale.

Closed System Treatment (Water)

Sequestering agent to reduce deposits and adjust pH.
Corrosion inhibitors; liquid boron-nitrate, sodium nitrite and borax, sodium totyltriazole, low molybdate weight polymers, phosphonates, sodium molybdate or sulphites.
Conductivity enhancers; phosphates or phosphates.

EQUIPMENT

Chemical Feeder: Five gallon housing, as shown on the drawings, quick opening cap for working pressure of 125 psig. Construct of materials which are impervious to the product being dispersed.

PART 3 - EXECUTION

PREPARATION

Provide systems which are operational, filled, started, and vented prior to cleaning. Use water meter to record capacity in each system.

Place control valves in open position during cleaning.

CLEANING SEQUENCE

Add cleaner to closed systems at concentration as recommended by manufacturer. For steam systems, fill boilers only with cleaner and water.

Add muriatic acid to systems in the concentration recommended by the manufacturer, to remove mil scale. Flush system completely with water and test to see that traces of muriatic acid have been removed.

Closed Loop Systems: Circulate for 48 hours, then drain systems as quickly as possible. Refill with clean water, circulate for 24 hours, then drain. Refill with clean water and repeat until system cleaner is removed.

Use neutralizer agent on recommendation of system cleaner supplier and approval of A/E.

Flush open systems with clean water for one hour minimum. Drain completely and refill.

Remove, clean, and replace strainer screens.

Inspect, remove sludge, and flush low points with clean water after cleaning process is completed. Include disassembly of components as required.

CLOSED SYSTEM TREATMENT

Provide chemical feeder on each system. Install isolating and drain valves and necessary piping. Install around globe valve downstream of circulating pumps unless indicated otherwise.

Introduce closed system treatment through bypass feeder when required or indicated by test.

Submit report to A/E indicating analysis of system water after cleaning and after treatment.

Insulate piping and bypass feeder as specified.

END OF SECTION

SECTION 235233 - WATER-TUBE BOILERS

PART 1 - GENERAL

SUMMARY

Section includes packaged, factory-fabricated and -assembled, gas-fired, finned water-tube boilers for generating hot water.

SUBMITTALS

Product Data: For each type of product, include the following:

Shop Drawings: For boilers, boiler trim, and accessories.

Include plans, elevations, sections, and installation details.
Include details of equipment assemblies. Indicate dimensions, weights, loads, required clearances, method of field assembly, components, and location and size of each field connection.

Coordination Drawings: Plan and elevation views, drawn to scale, indicating equipment manufacturers' service clearances, structure and base attachment, piping, power, controls, and flues.

Installation instructions.

Source quality-control reports.

Field quality-control reports.

Sample Warranty: For special warranty.

Other Informational Submittals:

ASME Stamp Certification and Report: Submit stamp certificate of authorization as required by authorities having jurisdiction, and document hydrostatic testing of piping external to boiler.
Startup service reports.

Operation and maintenance data.

WARRANTY

Special Warranty: Manufacturer agrees to repair or replace heat exchangers damaged by thermal shock and vent dampers of boilers that fail in materials or workmanship within specified warranty period.

Warranty Period for Heat Exchangers: 20 years from date of Substantial Completion.

Special Warranty: Manufacturer agrees to repair or replace drums, tubes, headers, cabinets, atmospheric gas burners, and pressure vessels of boilers that fail in materials or workmanship within specified warranty period.

PART 2 - PRODUCTS

PERFORMANCE REQUIREMENTS

Fuel-to **water** efficiency indicated shall be based on the following:

Efficiency Testing Method: BTS-2000.
Efficiency Testing Method: ASME Performance Test Code (PTC) 4, **Input-Output or Heat Loss** method.

Gas-Fired Boiler Emissions: Not to exceed allowable ambient-air quality standards in governing jurisdiction and indicated values.

Carbon monoxide:

50 parts per million at any point from 100 percent to **50** percent fire.

150 parts per million at any point below **50** percent fire.

Nitrogen compounds: **30** parts per million (dry volume basis and corrected to **3** percent oxygen at any point from 100 percent to low fire.
Sulfur compounds: **One** part per million (dry volume basis and corrected to **3** percent oxygen at any point from 100 percent to low fire.
Hydrocarbon and Volatile Organic Compounds: **10** parts per million (dry volume basis and corrected to **3** percent oxygen at any point from 100 percent to low fire.
Particulate Matter: **0.01 lb/MMBtu**.
Smoke: Not visible and not to exceed No. 1 on the Bacharach smoke scale.

Operation Following Loss of Normal Power:

Equipment, associated factory- and field-installed controls, and associated electrical equipment and power supply connected to back-up power system shall automatically return equipment and associated controls to the operating state occurring immediately before loss of normal power without need for manual intervention by an operator when power is restored either through a back-up power source or through normal power if restored before back-up power is brought online.
Refer to Drawings for equipment served by back-up power systems.
Provide means and methods required to satisfy requirement even if not explicitly indicated.

Electrical Components, Devices, and Accessories: Listed and labeled as defined in NFPA 70, by a qualified testing agency, and marked for intended location and application.

ASME Compliance: Fabricate and label boilers to comply with 2010 ASME Boiler and Pressure Vessel Code.

ASHRAE/IES 90.1 Compliance: Boilers shall have minimum efficiency according to "Gas and Oil Fired Boilers - Minimum Efficiency Requirements."

Comply with IECC-2015 minimum equipment efficiency requirements.

UL Compliance: Test boilers for compliance with UL listing requirements. Boilers shall be listed and labeled by a testing agency acceptable to authorities having jurisdiction.

FINNED WATER-TUBE BOILERS

Manufacturers:
Lochinvar
RBI
Laars

Description: Factory-fabricated, -assembled, and -tested boiler, with tubes sealed into headers pressure tight, and set on a steel base; including insulated jacket, flue-gas vent, combustion-air-intake connections, water supply and return connections, and controls.

Heat Exchanger:

Finned **copper or copper-nickel** tubing with stainless-steel baffles.
Single or two pass, **vertical** configuration.
Tubes shall be sealed in header **by welding** or **by mechanically rolling tubes in header**.

Combustion Chamber Internal Insulation: Interlocking panels of refractory insulation, high-temperature cements, mineral fiber, and ceramic refractory tile for service temperatures of up to 2000 deg F (1100 deg C).

Casing:

Jacket: **Sheet metal**, with snap-in or interlocking closures.
Control Compartment Enclosure: NEMA 250, Type 1A.
Finish: Manufacturer's standard factory finish.
Insulation: Minimum **1-inch** thick, mineral-fiber insulation surrounding the heat exchanger.

Burner:

Burner Tubes and Orifices: Stainless steel, for **natural** gas.

Direct Vent: Factory-mounted centrifugal fan to draw flue gas out of boiler and discharge into boiler vent.

Vertical Burner:

High-temperature stainless steel or Ceramic to fire in a 360-degree pattern.

Burner shall have a viewing port for observation of burner operation and a factory-mounted centrifugal fan to supply **room** air **through a replaceable 99 percent efficient (1-micrometer particles) filter** to boiler burner.

Fan shall be controlled to prepurge and postpurge the combustion chamber before firing.

Gas Train: Control devices and **full-modulation proportional** control sequence shall comply with **ASME CSD-1 and UL** requirements. In addition to these requirements, include shutoff cock, pressure regulator, and control valve.
Gas Train: Combination gas valve with manual shutoff, pressure regulator, and pilot adjustment.

Pilot: **Intermittent-electric-spark or Hot-surface** pilot ignition with 100 percent main-valve and pilot-safety shutoff with electronic supervision of burner flame.
Motors: Comply with requirements for motors specified in Section 230513 "Common Motor Requirements for HVAC Equipment."

Hot-Water Boiler Trim:

Hot-Water Temperature Controllers: Operating**, firing rate,** and high limit.
Safety Relief Valve: ASME rated.
Pressure and Temperature Gage: Minimum 3-1/2-inch- (89-mm-) diameter, combination water-pressure and -temperature gage. Gages shall have operating-pressure and -temperature ranges, so normal operating range is about 50 percent of full range.
Boiler Air Vent: **Manual**.
Drain Valve: Minimum NPS 3/4 (DN 20) hose-end valve.
Remote system temperature sensor.
Remote outside air temperature sensor.
Provide boilers with line-size, self-acting thermal mixing valve to maintain minimum water temperature to boiler inlet above combustion condensing temperature.

Controls:

Boiler operating controls shall include the following devices and features:

Control transformer.

Set-Point Adjust: Set points shall be adjustable.

Sequence of Operation: Digital, factory-fabricated and field-installed panel to control burner firing rate to reset supply-water temperature inversely with outdoor-air temperature.

Provide boiler controllers with dry contact relay output interlock for external circulation pump.

Burner Operating Controls: To maintain safe operating conditions, burner safety controls limit burner operation.

High Cutoff: **Manual** reset stops burner if operating conditions rise above maximum boiler design temperature.

Water Flow Switch: Automatic-reset paddle-switch shall prevent burner operation on low water flow.

Blocked Vent Safety Switch: Manual-reset switch factory mounted on draft diverter.

Rollout Safety Switch: Factory mounted on boiler combustion chamber.

Audible Alarm: Factory mounted on control panel with silence switch; shall sound alarm for above conditions.

Building Automation DDC System Interface: Factory install hardware and software to enable system to monitor, control, and display boiler status and alarms.

Hardwired I/O Points:

Monitoring: On/off status, **common trouble alarm**.
Control: On/off operation.

Communication Interface: **ASHRAE 135 (BACnet)** communication interface shall enable control system operator to remotely control on/off operation and capacity of boiler and monitor the boiler operation from an operator workstation. The control features and monitoring points at the boiler-control panel shall be available to the control system through an interface.

ELECTRICAL POWER

Single-Point Field Power Connection: Factory-installed and -wired switches, motor controllers, transformers, and other electrical devices necessary shall provide a single-point field power connection to boiler.

Enclosure: NEMA 250, Type **1**.

Enclosure shall have integral vents, fans, heat, and air conditioner as required to automatically control temperature inside enclosure within safe operating limits of devices installed within the enclosure.

Mounted on boiler assembly at a location convenient to operator.

Enclosure shall have hinged full-size door with key lock with common key for all locks.

Wiring shall be numbered and color-coded to match wiring diagram.
Install factory wiring outside of an enclosure in a **metal** raceway. Make final connections to motors using flexible conduit. Provide watertight installation for applications exposed to moisture.
Field power interface shall be to **nonfused disconnect switch**. Withstanding rating of disconnecting means shall protect equipment. Coordinate requirements with field electrical power source.
Provide branch power circuit to each motor and to controls **with disconnect switch or circuit breaker**.
Provide each motor with NEMA-rated motor controller, hand-off-auto switch, and overcurrent protection. Provide variable-frequency controller with manual bypass and line reactors for each variable-speed motor indicated.
Provide control power interlock raceways and wiring from boiler to circulation pump.
Provide raceways and control wiring from boiler to remote system temperature sensor and remote outside air temperature sensor.

VENTING KITS

Field verify and match existing exhaust vent connections. Provide transition fittings as required for a complete installation. Provide additional vent supports as required.

SOURCE QUALITY CONTROL

Test and inspect factory-assembled boilers, before shipping, according to 2010 ASME Boiler and Pressure Vessel Code.

Burner and Hydrostatic Test:

Factory adjust burner to eliminate excess oxygen, carbon dioxide, oxides of nitrogen emissions, and carbon monoxide in flue gas and to achieve performance requirements indicated.
Perform hydrostatic test of pressure vessel, piping, and trim of assembled boiler.

PART 3 - EXECUTION

BOILER INSTALLATION

Coordinate size and location of bases. Cast anchor-bolt inserts into concrete bases. Concrete, reinforcement, and formwork requirements are specified with concrete.

Equipment Mounting:

Install boilers on cast-in-place concrete equipment base(s).

Install gas-fired boilers according to NFPA 54.

Assemble and install boiler trim, components, and accessories that are not factory installed.

Install control and electrical devices furnished with boiler that are not factory mounted.

Install control and power wiring to field-mounted control and electrical devices furnished with boiler that are not factory installed.

Perform boil-out and cleaning procedures according to manufacturer's written instructions after completion of hydrostatic testing and before performing other field tests. Following boil-out and cleaning procedures, boiler shall be washed and flushed until water leaving boiler is clear.

Protect boiler fireside and waterside from corrosion.

Before boiler is filled with water, protect by dry storage method recommended by boiler manufacturer.
After boiler is filled with water, and left not fired for more than **10** days, protect by wet storage method recommended by boiler manufacturer.
Chemical Treatment: Quality of water in boilers shall be maintained by a professional water-treatment organization that shall provide on-site supervision to maintain the required water quality during periods of boiler storage as well as during operating, standby, and test conditions.

PIPING CONNECTIONS

Piping installation requirements are specified in other Sections. Drawings indicate general arrangement of piping, fittings, and specialties.

Where installing piping adjacent to boiler(s), allow space for service and maintenance.

Connect gas piping to boiler gas-train inlet with dirt leg, shutoff valve, and union or flange. Piping shall be at least full size of gas-train connection. Provide a reducer if required.

Connect hot-water piping to supply- and return-boiler connections with shutoff valve and union or flange at each connection.

Install piping from safety relief valves to nearest floor drain.

Install piping from equipment drain connection to nearest floor drain. Piping shall be at least full size of connection. Provide an isolation valve if required.

FLUE CONNECTIONS

Boiler Flue Venting:

Install venting kit.
Connect full size to boiler connections.

Connect breeching to full size of boiler outlet.

Install easily accessible test ports for field testing of flue gas from each boiler.

ELECTRICAL POWER CONNECTIONS

Connect wiring according to Section 260519 "Low-Voltage Electrical Power Conductors and Cables."

Ground equipment according to Section 260526 "Grounding and Bonding for Electrical Systems."

CONTROLS CONNECTIONS

Install control and electrical power wiring to field-mounted control devices.

Connect control wiring between boilers and other equipment to interlock operation as required, to provide a complete and functioning system.

Connect control wiring between boiler control interface and **DDC control system** for remote monitoring and enablement control of boilers.

FIELD QUALITY CONTROL

Engage a qualified testing agency to perform tests and inspections.

Perform the following tests and inspections:

Perform installation and startup checks according to manufacturer's written instructions.
Hydrostatic Leak Test: Repair leaks and retest until no leaks exist.

Operational Test: Start units to confirm proper motor rotation and unit operation. Adjust air-fuel ratio and combustion.
Test and adjust controls and safeties. Replace damaged and malfunctioning controls and equipment.

Check and adjust initial operating set points and high- and low-limit safety set points of fuel supply, water level, and **water temperature**.

Set field-adjustable switches and circuit-breaker trip ranges as indicated.

Boiler will be considered defective if it does not pass tests and inspections.

Prepare test and inspection reports.

Occupancy Adjustments: When requested within **12 months of date of Substantial Completion**, provide on-site assistance in adjusting system to suit actual occupied conditions. Provide up to **two** visits to Project during other-than-normal occupancy hours for this purpose.

DEMONSTRATION

Train Owner's maintenance personnel to adjust, operate, and maintain boilers.

END OF SECTION 235233

SECTION 236423 - AIR-COOLED, SCROLL WATER CHILLERS

PART 1 - GENERAL

SUMMARY

Section includes packaged, air-cooled, electric-motor-driven, scroll water chillers.

DEFINITIONS

BAS: Building automation system.

COP: Coefficient of performance. The ratio of the rate of heat removal to the rate of energy input using consistent units for any given set of rating conditions.

DDC: Direct digital control.

EER: Energy-efficiency ratio. The ratio of the cooling capacity given in Btu/h to the total power input given in watts at any given set of rating conditions.

GFI: Ground fault interrupt.

IPLV: Integrated part-load value. A single-number part-load efficiency figure of merit for a single chiller calculated per the method defined by AHRI 550/590 and referenced to AHRI standard rating conditions.

I/O: Input/output.

kW/Ton: The ratio of total power input of the chiller in kilowatts to the net refrigerating capacity in tons at any given set of rating conditions.

NPLV: Nonstandard part-load value. A single number part-load efficiency figure of merit for a single chiller calculated per the method defined by AHRI 550/590 and intended for operating conditions other than the AHRI standard rating conditions.

SCCR: Short-circuit current rating.

TEAO: Totally enclosed air over.

TENV: Totally enclosed nonventilating.

ACTION SUBMITTALS

Product Data: For each type of product.

Shop Drawings: Complete set of manufacturer's prints of water chiller assemblies, control panels, sections and elevations, and unit isolation. Include the following:

Assembled unit dimensions.
Weight and load distribution.
Required clearances for maintenance and operation.
Size and location of piping and wiring connections.
Diagrams for power, signal, and control wiring.

Installation instructions.

Source quality-control reports.

Startup service reports.

Sample warranty.

Operation and maintenance data.

QUALITY ASSURANCE

AHRI Certification: Certify chiller according to AHRI 590 certification program.

WARRANTY

Special Warranty: Manufacturer agrees to repair or replace components of water chillers that fail in materials or workmanship within specified warranty period.

Extended warranties include, but are not limited to, the following:

Complete chiller including refrigerant and oil charge.

Complete compressor and drive assembly including refrigerant and oil charge.

Refrigerant and oil charge.

Loss of refrigerant charge for any reason due to manufacturer's product defect and product installation.

Parts **and labor**.

Warranty Period: **Five** years from date of Substantial Completion.

PART 2 - PRODUCTS

PERFORMANCE REQUIREMENTS

AHRI Rating: Rate water chiller performance according to requirements in AHRI 550/590.

ASHRAE Compliance: ASHRAE 15 for safety code for mechanical refrigeration.

ASHRAE/IES 90.1 Compliance: Applicable requirements in ASHRAE/IES 90.1, Section 6 - "Heating, Ventilating, and Air-Conditioning."

Comply with IECC-2015 minimum energy efficiency requirements.

ASME Compliance: Fabricate and stamp water chiller heat exchangers to comply with ASME Boiler and Pressure Vessel Code.

Comply with NFPA 70.

Comply with requirements of UL 1995, "Heating and Cooling Equipment," and include label by a qualified testing agency showing compliance.

Operation Following Loss of Normal Power:

Equipment, associated factory- and field-installed controls, and associated electrical equipment and power supply connected to backup power system shall automatically return equipment and associated controls to the operating state occurring immediately before loss of normal power without need for manual intervention by an operator when power is restored either through a backup power source, or through normal power if restored before backup power is brought on-line.
See drawings for equipment served by backup power systems.
Provide means and methods required to satisfy requirement even if not explicitly indicated.

Outdoor Installations:

Chiller shall be suitable for outdoor installation indicated. Provide adequate weather protection to ensure reliable service life over a **20**-year period with minimal degradation due to exposure to outdoor ambient conditions.

MANUFACTURERS

JCI York International

Carrier Corporation

Trane

MANUFACTURED UNITS

Description: Factory-assembled and run-tested water chiller complete with compressor(s), compressor motors and motor controllers, evaporator, condenser with fans, electrical power, controls, and indicated accessories.

CABINET

Base: Galvanized-steel base extending the perimeter of water chiller. Secure frame, compressors, and evaporator to base to provide a single-piece unit.

Frame: Rigid galvanized-steel frame secured to base and designed to support cabinet, condenser, control panel, and other chiller components not directly supported from base.

Casing: Galvanized steel.

Finish: Coat base, frame, and casing with a corrosion-resistant coating capable of withstanding a [**500**] <**Insert time**>-hour salt-spray test according to ASTM B117.

COMPRESSOR-DRIVE ASSEMBLIES

Compressors:

Description: Positive-displacement direct drive with hermetically sealed casing.
Operating Speed: Nominal 3600 rpm for 60-Hz applications.
Capacity Control: On-off compressor cycling.

Digital compressor unloading is an acceptable alternative to achieve capacity control.

Oil Lubrication System: Automatic pump with strainer, sight glass, filling connection, filter with magnetic plug or removable magnet in sump, and initial oil charge.

Manufacturer's other standard methods of providing positive lubrication are acceptable in lieu of an automatic pump.

Compressor Motors:

Hermetically sealed and cooled by refrigerant suction gas.
High-torque, two-pole induction type with inherent thermal-overload protection on each phase.

Compressor Motor Controllers:

Across the Line: NEMA ICS 2, Class A, full voltage, nonreversing.

REFRIGERATION

Refrigerant: R-410A. Classified as Safety Group A1 according to ASHRAE 34.

Refrigerant Compatibility: Parts exposed to refrigerants shall be fully compatible with refrigerants, and pressure components shall be rated for refrigerant pressures.

Refrigerant Circuit: Each circuit shall include **an electronic or a thermal**-expansion valve, refrigerant charging connections, a hot-gas muffler, compressor suction and discharge shutoff valves, a liquid-line shutoff valve, a replaceable-core filter-dryer, a sight glass with moisture indicator, a liquid-line solenoid valve, and an insulated suction line.

Pressure Relief Device:

Comply with requirements in ASHRAE 15, ASHRAE 147, and applicable portions of ASME Boiler and Pressure Vessel Code: Section VIII, Division 1.
Select and configure pressure relief devices to protect against corrosion and inadvertent release of refrigerant.
ASME-rated, spring-loaded, pressure relief valve; single- or multiple-reseating type. Pressure relief valve(s) shall be provided for each heat exchanger.

EVAPORATOR

Brazed Plate:

Direct-expansion, single-pass, brazed-plate design.
Type **304 or 316** stainless-steel construction.
Code Compliance: Tested according to ASME Boiler and Pressure Vessel Code.
Fluid Nozzles: Terminate with mechanical-coupling end connections for connection to field piping. **Furnish flange adapters to mate to flanged piping.**

Flow Switch: Factory-furnished **and -installed, thermal-type** flow switch wired to chiller operating controls.

Heater: Factory-installed and -wired electric heater with integral controls designed to protect the evaporator.

AIR-COOLED CONDENSER

Coil(s) with integral subcooling on each circuit.

Aluminum Microchannel Coils:

Series of flat tubes containing a series of multiple, parallel-flow microchannels layered between refrigerant header manifolds.
Single- or multiple-pass arrangement.
Construct fins, tubes, and header manifolds of aluminum alloy treated with a corrosion-resistant coating.

Hail Protection: Provide condenser coils with louvers, baffles, or hoods to protect against hail damage.

Fans: Direct-drive propeller type with statically and dynamically balanced fan blades, arranged for vertical air discharge.

Fan Motors: TENV or TEAO enclosure, with sealed and permanently lubricated bearings, and having built-in overcurrent- and thermal-overload protection.

Overcurrent- and thermal-overload protection not integral to motor is acceptable if provided with chiller electrical power package.

Fan Guards: Removable steel safety guards with corrosion-resistant coating.

INSULATION

Factory-applied insulation over all cold surfaces of chiller capable of forming condensation. Components shall include, but not be limited to, evaporator, evaporator water boxes including nozzles, refrigerant suction pipe from evaporator to compressor, cold surfaces of compressor, refrigerant-cooled motor, and auxiliary piping.

ELECTRICAL

Factory installed and wired, and functionally tested at factory before shipment.

Factory-installed and -wired switches, motor controllers, transformers, and other electrical devices necessary shall provide a single-point field power connection to water chiller.

House in a unit-mounted, NEMA 250, **Type 3R** enclosure with hinged access door with lock and key or padlock and key.

Wiring shall be numbered and color-coded to match wiring diagram.

Factory wiring shall be located outside of an enclosure in a **metal** raceway. Terminal connections shall be made with not more than a 24-inch (610-mm) length of **liquidtight** conduit.

Field power interface shall be to **NEMA KS 1, heavy-duty, circuit breaker**. Minimum SCCR according to UL 508 shall be as required by electrical power distribution system, but not less than **42,000** A.

Each motor shall have branch power circuit and controls with one of the following disconnecting means having SCCR to match main disconnecting means:

NEMA KS 1, heavy-duty, fusible switch with rejection-type fuse clips rated for fuses. Select and size fuses to provide Type 2 protection according to IEC 60947-4-1.
UL 489, motor-circuit protector (circuit breaker) with field-adjustable, short-circuit trip coordinated with motor locked-rotor amperes.

Each motor shall have overcurrent protection.

Overload relay sized according to UL 1995, or an integral component of water chiller control microprocessor.

Phase-Failure and Undervoltage: Solid-state sensing with adjustable settings.

Controls Transformer: Unit-mounted transformer with primary and secondary fuses and sized with enough capacity to operate electrical load plus spare capacity.

Control Relays: Auxiliary and adjustable time-delay relays, or an integral to water chiller microprocessor.

Indicate the following for water chiller electrical power supply:

Current, phase to phase, for all three phases.
Voltage, phase to phase and phase to neutral for all three phases.
Three-phase real power (kilowatts).
Three-phase reactive power (kilovolt amperes reactive).
Power factor.
Running log of total power versus time (kilowatt hours).
Fault log, with time and date of each.

CONTROLS

Factory installed and wired, and functionally tested at factory before shipment.

Standalone, microprocessor based, with all memory stored in nonvolatile memory so that reprogramming is not required on loss of electrical power.

Enclosure: Share enclosure with electrical power devices or provide a separate enclosure of matching construction.

Operator Interface: Keypad or pressure-sensitive touch screen. Multiple-character, digital display. Display the following:

Date and time.
Operating or alarm status.
Operating hours.
Outside-air temperature if required for chilled-water reset.
Temperature and pressure of operating set points.
Chilled-water entering and leaving temperatures.
Refrigerant pressures in evaporator and condenser.
Saturation temperature in evaporator and condenser.
No cooling load condition.
Elapsed time meter (compressor run status).
Pump status.

Antirecycling timer status.
Percent of maximum motor amperage.
Current-limit set point.
Number of compressor starts.
Alarm history with retention of operational data before unit shutdown.
Superheat.

Control Functions:

Manual or automatic startup and shutdown time schedule.
Capacity control based on evaporator leaving-fluid temperature.
Capacity control compensated by rate of change of evaporator entering-fluid temperature.
Chilled-water entering and leaving temperatures, control set points, and motor load limit.
Current limit and demand limit.
External water chiller emergency stop.
Antirecycling timer.
Automatic lead-lag switching.

Manual-Reset Safety Controls: The following conditions shall shut down water chiller and require manual reset:

Low evaporator pressure or high condenser pressure.
Low chilled-water temperature.
Refrigerant high pressure.
High or low oil pressure.
High oil temperature.
Loss of chilled-water flow.
Control device failure.

DDC System Interface: Factory-install hardware and software to enable system to monitor, control, and display chiller status and alarms.

Hardwired I/O Points:

Monitoring: On/off status, **common trouble alarm, electrical power demand (kilowatts)**

Control: On/off operation, **chilled-water discharge temperature set-point adjustment**.

Communication Interface: **ASHRAE 135 (BACnet)** communication interface shall enable control system operator to remotely control and monitor the water chiller from an operator workstation. Control features and monitoring points displayed locally at water chiller control panel shall be available through DDC system for HVAC.

Factory-installed wiring outside of enclosures shall be in NFPA 70-complaint raceway. **Make terminal connections with liquidtight.**

ACCESSORIES

Factory-furnished **neoprene** isolators for field installation.

MATERIALS

Steel:

ASTM A36/A36M for carbon structural steel.
ASTM A568/A568M for steel sheet.

Stainless Steel:

Manufacturer's standard grade for casing.
Manufacturer's standard type, ASTM A240/A240M for bare steel exposed to airstream or moisture.

Galvanized Steel: ASTM A653/A653M.

Aluminum: ASTM B209.

SOURCE QUALITY CONTROL

Perform functional test of water chillers before shipping.

Factory performance test water chillers, before shipping, according to AHRI 550/590.

Test the following conditions:

Design conditions indicated.

AHRI 550/590 part-load points.

Factory test and inspect evaporator according to ASME Boiler and Pressure Vessel Code: Section VIII, Division 1. Stamp with ASME label.

For water chillers located outdoors, rate sound power level according to AHRI 370 procedure.

PART 3 - EXECUTION

WATER CHILLER INSTALLATION

Coordinate sizes and locations of bases with actual equipment provided. Cast anchor-bolt inserts into concrete bases.

Equipment Mounting:

Install water chillers on cast-in-place concrete equipment bases.

Maintain manufacturer's recommended clearances for service and maintenance.

Maintain clearances required by governing code.

Chiller manufacturer's factory-trained service personnel shall charge water chiller with refrigerant if not factory charged and fill with oil if not factory installed.

Install separate devices furnished by manufacturer and not factory installed.

Chillers shipped in multiple major assemblies shall be field assembled by chiller manufacturer's factory-trained service personnel.

PIPING CONNECTIONS

Comply with requirements in Section 232113 "Hydronic Piping" and Section 232116 "Hydronic Piping Specialties." Drawings indicate general arrangement of piping, fittings, and specialties.

Where installing piping adjacent to chillers, allow space for service and maintenance.

Connect each drain connection with a drain valve, full size of drain connection.

Connect each chiller vent connection with **an automatic** vent, full size of vent connection.

ELECTRICAL POWER CONNECTIONS

Connect wiring according to Section 260519 "Low-Voltage Electrical Power Conductors and Cables."

Ground equipment according to Section 260526 "Grounding and Bonding for Electrical Systems."

Provide nameplate for each electrical connection indicating electrical equipment designation and circuit number feeding connection. Nameplate shall be laminated phenolic layers of black with engraved white letters at least 1/2 inch (13 mm) high. Locate nameplate where easily visible.

CONTROLS CONNECTIONS

Install control and electrical power wiring to field-mounted control devices.

Connect control wiring between chillers and other equipment to interlock operation as required to provide a complete and functioning system.

Connect control wiring between chiller control interface and **DDC system** for remote monitoring and control of chillers. Comply with requirements in Section 230923 "Direct Digital Control (DDC) System for HVAC."

Provide nameplate on face of chiller control panel indicating control equipment designation serving chiller and the I/O point designation for each control connection. Nameplate shall be laminated phenolic layers of black with engraved white letters at least 1/2 inch (13 mm) high.

STARTUP SERVICE

Perform startup service.

Inspect field-assembled components, equipment installation, and piping and electrical connections for proper assemblies, installations, and connections.

Complete installation and startup checks according to manufacturer's written instructions and perform the following:

Verify that refrigerant charge is sufficient and water chiller has been leak tested.
Verify that pumps are installed and functional.
Verify that thermometers and gages are installed.
Operate water chiller for run-in period.
Check bearing lubrication and oil levels.
Verify that refrigerant pressure relief device for chillers installed indoors is vented outside.
Verify proper motor rotation.
Verify static deflection of vibration isolators, including deflection during water chiller startup and shutdown.
Verify and record performance of chilled-water flow and low-temperature interlocks.
Verify and record performance of water chiller protection devices.
Test and adjust controls and safeties. Replace damaged or malfunctioning controls and equipment.

Visually inspect chiller for damage before starting. Repair or replace damaged components, including insulation. Do not start chiller until damage that is detrimental to operation has been corrected.

Prepare a written startup report that records results of tests and inspections.

DEMONSTRATION

Engage a factory-authorized service representative to train Owner's maintenance personnel to adjust, operate, and maintain water chillers.

Instructor shall be factory trained and certified.
Provide not less than **eight** hours of training.
Train personnel in operation and maintenance and to obtain maximum efficiency in plant operation.
Provide instructional videos showing general operation and maintenance that are coordinated with operation and maintenance manuals.
Obtain Owner sign-off that training is complete.
Owner training shall be held at Project site.

END OF SECTION 236423.13

SECTION 23 73 13 – MODULAR CENTRAL STATION AIR HANDLING UNITS

PART 1 - GENERAL

DESCRIPTION

Factory fabricated roof mounted modular air handling units.

REFERENCES

ABMA 9 - Load Ratings and Fatigue Life for Ball Bearings.

AMCA 300 - Reverberant Room Method for Sound Testing of Fans.

ASHRAE 68 - Laboratory Method of Testing In-Duct Sound Power Measurement Procedures for Fans.

AHRI 410 - Forced-Circulation Air-Cooling and Air-Heating Coils.

AHRI 430 - Standard for Central-Station Air-Handling Units.

IECC - International Energy Conservation Code, 2015 Edition with City of Stafford, Texas amendments.

IMC - International Mechanical Code, 2015 Edition with City of Stafford, Texas amendments.

NFPA 70 - National Electrical Code, 2017 edition.

NFPA 90A - Installation of Air Conditioning and Ventilation Systems.

SUBMITTALS

Shop Drawings: Submit 1/4 inch scale equipment layouts showing equipment, piping, and ductwork.

Product Data:

Indicate dimensions, weights, capacities, ratings, fan performance, motor electrical characteristics, gauges, and finishes of materials. Indicate dimensions, weight, capacities, required clearances, and location and size of field connections.

Structural calculations indicating compliance with wind load ratings.

Include data for filter media, filter performance data, filter assembly, and filter frames.

Fan Performance Curves: Submit with specified operating point clearly plotted. Base performance curves on tests in accordance with AHRI standards. Conduct tests in AHRI-approved laboratory.

Sound Power Levels: Submit sound power levels in octave bands from 63 to 8,000 Hz for unit inlet, outlet and casing radiation at rated capacity. Base sound power levels on actual factory test data on fan sizes and accessories being furnished.

Operation and Maintenance manuals for air handling units.

QUALITY ASSURANCE

Wind Load Rating: Provide units designed to withstand 150 mph basic wind speed in compliance with ASCE and IBC code requirements.

Performance Ratings: Conform to ARI; bear AHRI 430 certified rating seal.

Sound Ratings: Test air handling unit in accordance with AMCA 300 or ASHRAE 68 Guidelines.

Air Coils: Certify capacities, pressure drops, and selection procedures in accordance with AHRI 410.

Manufacturer: Regularly engaged in production of components who issues complete catalog data on total product.

Base performance on sea level conditions, unless otherwise scheduled.

DELIVERY, STORAGE, AND HANDLING

Deliver products to site in factory-fabricated protective containers, with factory-installed shipping skids or lifting lugs.

Store in clean dry place and protect from weather and construction traffic. Handle to avoid damage to components, enclosures, and finish. Replace damaged equipment.

ENVIRONMENTAL REQUIREMENTS

Provide complete unit including components designed to operate within range of 35 degrees F to 135 degrees F ambient temperature and 20 to 70 percent relative humidity.

WARRANTY

Warranty shall include parts and labor for one (1) year from substantial completion.

PART 2 - PRODUCTS

PREAPPROVED MANUFACTURERS

Carrier.

Daikin

JCI York

Trane

MANUFACTURED UNITS

General Description: Factory assembled modular air handling units with base support rail and roof curb. Provide units with the following modular sections unless indicated otherwise:

Return air / outdoor air mixing box with internally mounted control dampers and outdoor air intake hood.
Air filter section
Hearing coil section
Coil access section
Cooling coil section with internally mounted drain pan
Supply fan section
Coil piping vestibules

Provide air-handling units suitable for outdoor roof mounted installations. of the following type:
VAV terminal unit systems with variable speed fan drives.

Motor and Electrical Components: Refer to Division 26 Section "Variable Frequency Drives, Motors & Motor Controllers" for VFD specifications. Wall or unit mounted VFD must comply with section 23 05 13 of this Specification. VFD for the roof mounted units must be installed within the unit cabinet.

Furnish each unit with a durable, deep etched, 0.25" thick factory installed aluminum identification plate, permanently mounted with the following information: Unit ID as indicated on contract drawings, Serial Number, Model Number, CFM, SP, Motor HP, Unit Power supply - V/PH/A, Supply fan type, Coil GPM and PD, Sales order #, and Date unit manufactured.

CASING

Provide minimum 12 gauge galvanized structural steel unit perimeter base frame rail to form a unitized assembly. Provide base with a minimum of 2" thick insulated floor withG90 galvanized steel inner casing and G90 galvanized steel outer casing. Provide base designed to allow sufficient space for the full 2" thick insulation (zero compression) between the exterior unit panel and the lowest point of the drain pan (No Exceptions). Provide steel base rails and frame painted with two (2) coats of polyester resin paint. All penetrations thru the air unit shall be sealed.

Provide unit casing constructed using minimum 2" thick double wall closed cell urethane foam injected panels with thermal break design. Casing materials shall be minimum G90 galvanized steel exterior and interior panels with minimum R-13 insulation rating. Construction must allow air handling unit interior cleaning of microbial growth and other debris. Units shall be factory painted with two (2) coats of polyester resin paint. All penetrations thru the air unit shall be sealed.

Provide units with factory mounted sloped weatherproof roof system independent of unit casing. Construct roof system with polyester resin painted G90 galvanized steel panels.

Provide gaskets between section and access panels. The casing leakage rate shall not exceed 0.5 cfm per square foot of cabinet area at 6 inches positive or negative static pressure.

Reinforce and brace unit housing with steel angle framework to provide rigidity and prevent pulsations. Panel defection shall not exceed L/240 ratio at 125% of design static pressure of maximum 8 inches (positive) or 6 inches (negative). Defection shall be measured at the midpoint of the panel height.

Access doors shall be constructed as a 2-inch nominal thick; thermal broke double wall assembly, injected with foam insulation for an R-value of not less than R-13. Provide access doors with stainless steel hinges, drip edge guards, multi-point safety cam-lock door latches, and high durability molded and permanently retained elastomeric gasket systems.

Construct coil section so coils can be removed without affecting structural integrity of casing. Completely enclose connections, coil headers, and return bends. Do not use coil frame as structural member for coil section.

FANS

Provide fan sections with Single width, single inlet, class II, direct-drive type fans, dynamically balanced as an assembly, or as indicated in equipment schedules.

Provide self-aligning, grease lubricated, ball or roller bearings with lubrication fittings extended to exterior of fan casing with zerk fitting rigidly attached to casing. Provide lubrication fittings on side of unit away from mechanical room wall. See Drawings for orientation of units.

Provide 2” deflection internal spring isolation fan and motor assembly.

Provide internal flexible connection on discharge of fan to isolate fan from casing.

MOTORS AND DRIVES

Motors and Controllers: Provide premium efficiency ODP motors mounted inside the fan section in compliance with Section 23 05 13.

Bearings: AFBMA 9, L-50 life at 200,000 hours, heavy-duty pillow block or flange type, self-aligning, grease-lubricated ball bearings. Extend grease fittings to the drive side of the fan assembly.

Shafts: Solid hot rolled steel, ground and polished, with key-way, and protectively coated with lubricating oil. Shafts shall not pass through first critical speed as unit comes up to rated rpm.

WATER COILS

Provide coil section with 304 stainless steel coil casing. Enclose coils with headers and return bends fully contained within casing. Coils are to be installed on tracks; disassembly of the unit for coil removal is not acceptable. Slide coils into casing through removable end panel with blank off sheets and sealing collars at connection penetrations.

Provide counter flow chilled water coils, minimum six (6) rows deep to meet or exceed specified design load for sensible and total heat removal requirements.

Rate coils in accordance with AHRI certified data. Select coil to provide capacity in accordance with water flow and temperatures scheduled on Drawings with maximum water pressure drop through coil of 20 feet and maximum velocity in tubes of 5 feet per second. Provide coil with maximum 500 fpm face velocity or as otherwise indicated.

Provide chilled water and hot water coils as scheduled

Provide 1/2-inch or 5/8-inch outside diameter copper tube coils with aluminum plate fins, maximum 10 fins per inch with copper headers. Provide coils with plate fin wall thickness of 0.0075-inch and tubes of minimum wall thickness of 0.025-inch. Connect tubes to header which provides equal flow to all tubes and provide single point connections for supply and return piping per coil.

Coils are to be not trapping, coil vents and drains are to be accessible outside the units.

Coils to be factory tested at minimum 300 psig.

Provide one-piece fully insulated drain pans constructed from minimum 16 gauge type 304 stainless steel. Provide drain pans in compliance with ASHRAE 62.1. Drain pans shall have raised lips, welded corners, and pipe drain connections. Drain pans must be sloped in two (2) directions for complete drainage and in compliance with ASHRAE Standard 62. Pans shall be provided for hot and chilled water coils. Provide drain pans extending under complete cooling coil section and extending 16 inches minimum downstream of cooling coil. Provide intermediate drain pans that extend minimum of 6" from the coil face with downspouts to bottom drain pan for cooling coil banks more than one coil high.

FILTERS

Provide units configured for 2” disposable pleased panel filters with MERV rating as specified. Provide units with galvanized or stainless steel filter frames with hinged access doors on both sides for side loading filters. Provide units with factory mounted Magnahelic differential pressure gauge and 1/4 -inch metal tubing for monitoring air filter pressure drop.

DAMPERS

Provide low leakage dampers furnished by the unit manufacturer with extruded aluminum airfoil blades, extruded aluminum or stainless steel tubular steel shafting, heavy duty nylon shaft bearings, rubber edge seals, stainless steel jamb seals, a 16 gauge galvanized steel frame and include linkage.

All dampers must be constructed and tested so as to have a leakage rate not to exceed 0.5 CFM at 4 inches total static pressure.

PART 3 - EXECUTION

INSTALLATION

Install in accordance with manufacturer's instructions.

Provide all required external piping and electrical connections.

Provide unit controls in accordance with BAS requirements.

Install filters. Contractor shall maintain all filters from start up through substantial completion; a clean set of filters shall be installed when needed by Testing and Balancing.

Install units on factory fabricated insulated galvanized roof curb adapters.

At substantial completion the units shall be clean inside and out and left in factory new condition.

Test, balance, and commission units in accordance with TAB specifications.

END OF SECTION

THIS PAGE IS INTENTIONALLY LEFT BLANK

SECTION 26 05 26 GROUNDING AND BONDING FOR ELECTRICAL SYSTEMS

PART 1 - GENERAL

RELATED DOCUMENTS

Drawings and general provisions of the Contract, including General and Supplementary Conditions and Division 01 Specification Sections, apply to this Section.

SUMMARY

This Section includes methods and materials for grounding systems and equipment, plus the following special applications:

Underground distribution grounding.

Common ground bonding with lightning protection system.

SUBMITTALS

Product Data: For each type of product indicated.

Other Informational Submittals: Plans showing dimensioned as-built locations of grounding features specified in Part 3 "Field Quality Control" Article, including the following:

- Test wells.
- Ground rods.
- Ground rings.
- Grounding arrangements and connections for separately derived systems.
- Grounding for sensitive electronic equipment.

Qualification Data: For testing agency and testing agency's field supervisor.

Field quality-control test reports.

Operation and Maintenance Data: For grounding to include the following in emergency, operation, and maintenance manuals:

- Instructions for periodic testing and inspection of grounding features at ground rings grounding connections for separately derived systems based on NFPA 70B.
  - Tests shall be to determine if ground resistance or impedance values remain within specified maximums, and instructions shall recommend corrective action if they do not.
  - Include recommended testing intervals.

QUALITY ASSURANCE

Testing Agency Qualifications: An independent agency, with the experience and capability to conduct the testing indicated, that is a member company of the InterNational Electrical Testing Association or is a nationally recognized testing laboratory (NRTL) as defined by OSHA in 29 CFR 1910.7, and that is acceptable to authorities having jurisdiction.

Testing Agency's Field Supervisor: Person currently certified by the InterNational Electrical Testing Association to supervise on-site testing specified in Part 3.

Electrical Components, Devices, and Accessories: Listed and labeled as defined in NFPA 70, Article 100, by a testing agency acceptable to authorities having jurisdiction, and marked for intended use.

Comply with UL 467 for grounding and bonding materials and equipment.

PART 2 - PRODUCTS

CONDUCTORS

Approved Manufacturers:
Copperweld
Cadweld
Burndy
LSCS approved equal

Insulated Conductors: Copper wire or cable insulated for 600 V unless otherwise required by applicable Code or authorities having jurisdiction.

Bare Copper Conductors:
Solid Conductors: ASTM B 3.
Stranded Conductors: ASTM B 8.
Tinned Conductors: ASTM B 33.
Bonding Cable: 28 kcmil, 14 strands of No. 17 AWG conductor, 1/4 inch in diameter.
Bonding Conductor: No. 4 or No. 6 AWG, stranded conductor.
Bonding Jumper: Copper tape, braided conductors, terminated with copper ferrules; 1-5/8 inches wide and 1/16 inch thick.
Tinned Bonding Jumper: Tinned-copper tape, braided conductors, terminated with copper ferrules; 1-5/8 inches wide and 1/16 inch thick.

Bare Grounding Conductor and Conductor Protector for Wood Poles:
No. 4 AWG minimum, soft-drawn copper.
Conductor Protector: Half-round PVC or wood molding. If wood, use pressure-treated fir or cypress or cedar.

Grounding Bus: Rectangular bars of annealed copper, 1/4 by 2 inches in cross section, unless otherwise indicated; with insulators.

CONNECTORS

Listed and labeled by a nationally recognized testing laboratory acceptable to authorities having jurisdiction for applications in which used, and for specific types, sizes, and combinations of conductors and other items connected.

Bolted Connectors for Conductors and Pipes: Copper or copper alloy, bolted pressure-type, with at least two bolts.
Pipe Connectors: Clamp type, sized for pipe.

Welded Connectors: Exothermic-welding kits of types recommended by kit manufacturer for materials being joined and installation conditions.

GROUNDING ELECTRODES

Ground Rods: Copper-clad steel; 3/4 inch by10 feet in diameter.

Chemical-Enhanced Grounding Electrodes: Copper tube, straight or L-shaped, charged with nonhazardous electrolytic chemical salts.

Termination: Factory-attached No. 4/0 AWG bare conductor at least 48 inches long.

Backfill Material: Electrode manufacturer's recommended material.

PART 3 - EXECUTION

APPLICATIONS

Every building shall be grounded.

Each individual conduit run requires a grounding conductor to be pulled along with the current carrying conductors. The raceway is NOT an acceptable primary grounding conductor.

All metal boxes shall have a grounding tail or grounding clip.

All distribution boards, switchboards, panelboards, motor control centers, etc. shall have the supply conductor conduit terminating in a grounding type bushing.

Conductors: Install solid conductor for No. 8 AWG and smaller, and stranded conductors for No. 6 AWG and larger, unless otherwise indicated.

Underground Grounding Conductors: Install bare tinned copper conductor, No. 2/0 AWG minimum.

Bury at least 24 inches below grade.

Duct-Bank Grounding Conductor: Bury 12 inches above duct bank when indicated as part of duct-bank installation.

Isolated Grounding Conductors: Green-colored insulation with continuous yellow stripe. On feeders with isolated ground, identify grounding conductor where visible to normal inspection, with alternating bands of green and yellow tape, with at least three bands of green and two bands of yellow.

Grounding Bus: Install in electrical and telephone equipment rooms, in rooms housing service equipment, and elsewhere as indicated.

Install bus on insulated spacers 1 inch, minimum, from wall 6 inches above finished floor, unless otherwise indicated.

Where indicated on both sides of doorways, route bus up to top of door frame, across top of doorway, down to specified height above floor, and connect to horizontal bus.

Conductor Terminations and Connections:

Pipe and Equipment Grounding Conductor Terminations: Bolted connectors.

Underground Connections: Welded connectors, except at test wells and as otherwise indicated.

Connections to Ground Rods at Test Wells: Bolted connectors.

Connections to Structural Steel: Welded connectors.

GROUNDING UNDERGROUND DISTRIBUTION SYSTEM COMPONENTS

Comply with IEEE C2 grounding requirements.

Grounding Manholes and Handholes: Install a driven ground rod through manhole or handhole floor, close to wall, and set rod depth so 4 inches will extend above finished floor. If necessary, install ground rod before manhole is placed and provide No. 1/0 AWG bare, tinned-copper conductor from ground rod into manhole through a waterproof sleeve in manhole wall. Protect ground rods passing through concrete floor with a double wrapping of pressure-sensitive insulating tape or heat-shrunk insulating sleeve from 2 inches above to 6 inches below concrete. Seal floor opening with waterproof, nonshrink grout.

Grounding Connections to Manhole Components: Bond exposed-metal parts such as inserts, cable racks, pulling irons, ladders, and cable shields within each manhole or handhole, to ground rod or grounding conductor. Make connections with No. 4 AWG minimum, stranded, hard-drawn copper bonding conductor. Train conductors level or plumb around corners and fasten to manhole walls. Connect to cable armor and cable shields as recommended by manufacturer of splicing and termination kits.

Pad-Mounted Transformers and Switches: Install two ground rods and ground ring around the pad. Ground pad-mounted equipment and noncurrent-carrying metal items associated with substations by connecting them to underground cable and grounding electrodes. Install tinned-copper conductor not less than No. 2 AWG for ground ring and for taps to equipment grounding terminals. Bury ground ring not less than 6 inches from the foundation.

EQUIPMENT GROUNDING

Install insulated equipment grounding conductors with all feeders and branch circuits.

Install insulated equipment grounding conductors with the following items, in addition to those required by NFPA 70:

Feeders and branch circuits.
Lighting circuits.
Receptacle circuits.
Single-phase motor and appliance branch circuits.
Three-phase motor and appliance branch circuits.
Flexible raceway runs.
Armored and metal-clad cable runs.
Busway Supply Circuits: Install insulated equipment grounding conductor from grounding bus in the switchgear, switchboard, or distribution panel to equipment grounding bar terminal on busway.
Computer and Rack-Mounted Electronic Equipment Circuits: Install insulated equipment grounding conductor in branch-circuit runs from equipment-area power panels and power-distribution units.

Air-Duct Equipment Circuits: Install insulated equipment grounding conductor to duct-mounted electrical devices operating at 120 V and more, including air cleaners, heaters, dampers, humidifiers, and other duct electrical equipment. Bond conductor to each unit and to air duct and connected metallic piping.

Water Heater, Heat-Tracing, and Antifrost Heating Cables: Install a separate insulated equipment grounding conductor to each electric water heater and heat-tracing cable. Bond conductor to heater units, piping, connected equipment, and components.

Isolated Grounding Receptacle Circuits: Install an insulated equipment grounding conductor connected to the receptacle grounding terminal. Isolate conductor from raceway and from panelboard grounding terminals. Terminate at equipment grounding conductor terminal of the applicable derived system or service, unless otherwise indicated.

Isolated Equipment Enclosure Circuits: For designated equipment supplied by a branch circuit or feeder, isolate equipment enclosure from supply circuit raceway with a nonmetallic raceway fitting listed for the purpose. Install fitting where raceway enters enclosure, and install a separate insulated equipment grounding conductor. Isolate conductor from raceway and from panelboard grounding terminals. Terminate at equipment grounding conductor terminal of the applicable derived system or service, unless otherwise indicated.

Signal and Communication Equipment: For telephone, alarm, voice and data, and other communication equipment, provide No. 4 AWG minimum insulated grounding conductor in raceway from grounding electrode system to each service location, terminal cabinet, wiring closet, and central equipment location.

Service and Central Equipment Locations and Wiring Closets: Terminate grounding conductor on a 1/4-by-2-by-12-inch grounding bus.

Terminal Cabinets: Terminate grounding conductor on cabinet grounding terminal.

Metal Poles Supporting Outdoor Lighting Fixtures: Install grounding electrode and a separate insulated equipment grounding conductor in addition to grounding conductor installed with branch-circuit conductors.

INSTALLATION

Grounding Conductors: Route along shortest and straightest paths possible, unless otherwise indicated or required by Code. Avoid obstructing access or placing conductors where they may be subjected to strain, impact, or damage.

Common Ground Bonding with Lightning Protection System: Comply with NFPA 780 and UL 96 when interconnecting with lightning protection system. Bond electrical power system ground directly to lightning protection system grounding conductor at closest point to electrical service grounding electrode. Use bonding conductor sized same as system grounding electrode conductor, and install in conduit.

Ground Rods: Drive rods until tops are 2 inches below finished floor or final grade, unless otherwise indicated.

Interconnect ground rods with grounding electrode conductor below grade and as otherwise indicated. Make connections without exposing steel or damaging coating, if any.

For grounding electrode system, install at leas three rods spaced at least one-rod length from each other and located at least the same distance from other grounding electrodes, and connect to the service grounding electrode conductor.

Test Wells: Ground rod driven through drilled hole in bottom of handhole. Handholes are specified in Division 26 Section "Underground Ducts and Raceways for Electrical Systems," and shall be at least 12 inches deep, with cover.

Test Wells: Install at least one test well for each service, unless otherwise indicated. Install at the ground rod electrically closest to service entrance. Set top of test well flush with finished grade or floor.

Bonding Straps and Jumpers: Install in locations accessible for inspection and maintenance, except where routed through short lengths of conduit.

Bonding to Structure: Bond straps directly to basic structure, taking care not to penetrate any adjacent parts.

Bonding to Equipment Mounted on Vibration Isolation Hangers and Supports: Install so vibration is not transmitted to rigidly mounted equipment.

Use exothermic-welded connectors for outdoor locations, but if a disconnect-type connection is required, use a bolted clamp.

Grounding and Bonding for Piping:

Metal Water Service Pipe: Install insulated copper grounding conductors, in conduit, from building's main service equipment, or grounding bus, to main metal water service entrances to building. Connect grounding conductors to main metal water service pipes, using a bolted clamp connector or by bolting a lug-type connector to a pipe flange, using one of the lug bolts of the flange. Where a dielectric main water fitting is installed, connect grounding conductor on street side of fitting. Bond metal grounding conductor conduit or sleeve to conductor at each end.

Water Meter Piping: Use braided-type bonding jumpers to electrically bypass water meters. Connect to pipe with a bolted connector.

Bond each aboveground portion of gas piping system downstream from equipment shutoff valve.

Bonding Interior Metal Ducts: Bond metal air ducts to equipment grounding conductors of associated fans, blowers, electric heaters, and air cleaners. Install bonding jumper to bond across flexible duct connections to achieve continuity.

Grounding for Steel Building Structure: Install a driven ground rod at base of each corner column and at intermediate exterior columns at distances not more than 60 feet apart.

Ground Ring: Install a grounding conductor, electrically connected to each building structure ground rod and to each indicated item, extending around the perimeter of building.

Install tinned-copper conductor not less than No. 2/0 AWG for ground ring and for taps to building steel.

Bury ground ring not less than 24 inches from building foundation.

FIELD QUALITY CONTROL

Testing Agency: Owner will engage a qualified testing and inspecting agency to perform field tests and inspections and prepare test reports.

Testing Agency: Engage a qualified testing and inspecting agency to perform the following field tests and inspections and prepare test reports:

Perform the following tests and inspections and prepare test reports:

After installing grounding system but before permanent electrical circuits have been energized, test for compliance with requirements.

Test completed grounding system at each location where a maximum ground-resistance level is specified, at service disconnect enclosure grounding terminal and at individual ground rods. Make tests at ground rods before any conductors are connected.

Measure ground resistance not less than two full days after last trace of precipitation and without soil being moistened by any means other than

natural drainage or seepage and without chemical treatment or other artificial means of reducing natural ground resistance.

Perform tests by fall-of-potential method according to IEEE 81.

Prepare dimensioned drawings locating each test well, ground rod and ground rod assembly, and other grounding electrodes. Identify each by letter in alphabetical order, and key to the record of tests and observations. Include the number of rods driven and their depth at each location, and include observations of weather and other phenomena that may affect test results. Describe measures taken to improve test results.

Report measured ground resistances that exceed the following values:

Power and Lighting Equipment or System with Capacity More Than 1000 kVA: 5 ohms.
Power Distribution Units or Panelboards Serving Electronic Equipment: 3 ohm(s).
Substations and Pad-Mounted Equipment: 5 ohms.
Manhole Grounds: 10 ohms.

Excessive Ground Resistance: If resistance to ground exceeds specified values, notify Architect promptly and include recommendations to reduce ground resistance.

END OF SECTION

SECTION 26 05 29 HANGERS AND SUPPORTS FOR ELECTRICAL SYSTEMS

PART 1 - GENERAL

RELATED DOCUMENTS

Drawings and general provisions of the Contract, including General and Supplementary Conditions and Division 01 Specification Sections, apply to this Section.

SUMMARY

This Section includes the following:
- Hangers and supports for electrical equipment and systems.
- Construction requirements for concrete bases.

DEFINITIONS

EMT: Electrical metallic tubing.

IMC: Intermediate metal conduit.

RMC: Rigid metal conduit.

PERFORMANCE REQUIREMENTS

Delegated Design: Design supports for multiple raceways, including comprehensive engineering analysis by a qualified professional engineer, using performance requirements and design criteria indicated.

Design supports for multiple raceways capable of supporting combined weight of supported systems and its contents.

Design equipment supports capable of supporting combined operating weight of supported equipment and connected systems and components.

Rated Strength: Adequate in tension, shear, and pullout force to resist maximum loads calculated or imposed for this Project, with a minimum structural safety factor of five times the applied force.

SUBMITTALS

Product Data: For the following:
- Steel slotted support systems.
- Nonmetallic slotted support systems.

Shop Drawings: Show fabrication and installation details and include calculations for the following:
- Trapeze hangers. Include Product Data for components.
- Steel slotted channel systems. Include Product Data for components.
- Nonmetallic slotted channel systems. Include Product Data for components.
- Equipment supports.

QUALITY ASSURANCE

Welding: Qualify procedures and personnel according to AWS D1.1/D1.1M, "Structural Welding Code - Steel."

Comply with NFPA 70.

COORDINATION

Coordinate size and location of concrete bases. Cast anchor-bolt inserts into bases. Concrete, reinforcement, and formwork requirements are specified in Division 03.

Coordinate installation of roof curbs, equipment supports, and roof penetrations. These items are specified in Division 07 Section "Roof Accessories."

PART 2 - PRODUCTS

SUPPORT, ANCHORAGE, AND ATTACHMENT COMPONENTS

Steel Slotted Support Systems: Comply with MFMA-4, factory-fabricated components for field assembly.

Available Manufacturers: Subject to compliance with requirements, manufacturers offering products that may be incorporated into the Work include, but are not limited to, the following:

Manufacturers: Subject to compliance with requirements, provide products by one of the following:

Allied Tube & Conduit.

Cooper B-Line, Inc.; a division of Cooper Industries.

ERICO International Corporation.

Thomas & Betts Corporation.

Unistrut; Tyco International, Ltd.

Metallic Coatings: Hot-dip galvanized after fabrication and applied according to MFMA-4.

Nonmetallic Coatings: Manufacturer's standard PVC, polyurethane, or polyester coating applied according to MFMA-4.

Painted Coatings: Manufacturer's standard painted coating applied according to MFMA-4.

Channel Dimensions: Selected for applicable load criteria.

Nonmetallic Slotted Support Systems: Structural-grade, factory-formed, glass-fiber-resin channels and angles with 9/16-inch diameter holes at a maximum of 8 inches o.c., in at least 1 surface.

Available Manufacturers: Subject to compliance with requirements, manufacturers offering products that may be incorporated into the Work include, but are not limited to, the following:

Manufacturers: Subject to compliance with requirements, provide products by one of the following:

Allied Tube & Conduit.

Cooper B-Line, Inc.; a division of Cooper Industries.

Fabco Plastics Wholesale Limited.

Fittings and Accessories: Products of channel and angle manufacturer and designed for use with those items.
Fitting and Accessory Materials: Same as channels and angles except metal items may be stainless steel.
Rated Strength: Selected to suit applicable load criteria.

Raceway and Cable Supports: As described in NECA 1 and NECA 101.

Conduit and Cable Support Devices: Steel and malleable-iron hangers, clamps, and associated fittings, designed for types and sizes of raceway or cable to be supported.

Support for Conductors in Vertical Conduit: Factory-fabricated assembly consisting of threaded body and insulating wedging plug or plugs for non-armored electrical conductors or cables in riser conduits. Plugs shall have number, size, and shape of conductor gripping pieces as required to suit individual conductors or cables supported. Body shall be malleable iron.

Structural Steel for Fabricated Supports and Restraints: ASTM A 36/A 36M, steel plates, shapes, and bars; black and galvanized.

Mounting, Anchoring, and Attachment Components: Items for fastening electrical items or their supports to building surfaces include the following:

Powder-Actuated Fasteners: Threaded-steel stud, for use in hardened portland cement concrete, steel, or wood, with tension, shear, and pullout capacities appropriate for supported loads and building materials where used.

Available Manufacturers: Subject to compliance with requirements, manufacturers offering products that may be incorporated into the Work include, but are not limited to, the following:

Manufacturers: Subject to compliance with requirements, provide products by one of the following:

Hilti Inc.
ITW Ramset/Red Head; a division of Illinois Tool Works, Inc.
MKT Fastening, LLC.
Simpson Strong-Tie Co., Inc.; Masterset Fastening Systems Unit.

Mechanical-Expansion Anchors: Insert-wedge-type, steel, for use in hardened portland cement concrete with tension, shear, and pullout capacities appropriate for supported loads and building materials in which used.

Available Manufacturers: Subject to compliance with requirements, manufacturers offering products that may be incorporated into the Work include, but are not limited to, the following:

Manufacturers: Subject to compliance with requirements, provide products by one of the following:

Cooper B-Line, Inc.; a division of Cooper Industries.
Empire Tool and Manufacturing Co., Inc.
Hilti Inc.
ITW Ramset/Red Head; a division of Illinois Tool Works, Inc.
MKT Fastening, LLC.

Concrete Inserts: Steel or malleable-iron, slotted support system units similar to MSS Type 18; complying with MFMA-4 or MSS SP-58.
Clamps for Attachment to Steel Structural Elements: MSS SP-58, type suitable for attached structural element.
Through Bolts: Structural type, hex head, and high strength. Comply with ASTM A 325.
Toggle Bolts: All-steel springhead type.
Hanger Rods: Threaded steel.

FABRICATED METAL EQUIPMENT SUPPORT ASSEMBLIES

Description: Welded or bolted, structural-steel shapes, shop or field fabricated to fit dimensions of supported equipment.

Materials: Comply with requirements in Division 05 Section "Metal Fabrications" for steel shapes and plates.

PART 3 - EXECUTION

APPLICATION

Comply with NECA 1 and NECA 101 for application of hangers and supports for electrical equipment and systems except if requirements in this Section are stricter.

Maximum Support Spacing and Minimum Hanger Rod Size for Raceway: Space supports for EMT, IMC, and RMC as required by NFPA 70. Minimum rod size shall be 1/4 inch in diameter.

Multiple Raceways or Cables: Install trapeze-type supports fabricated with steel slotted or other support system, sized so capacity can be increased by at least 25 percent in future without exceeding specified design load limits.
Secure raceways and cables to these supports with two-bolt conduit clamps.

Spring-steel clamps designed for supporting single conduits without bolts may be used for 1-1/2-inch and smaller raceways serving branch circuits and communication systems above suspended ceilings and for fastening raceways to trapeze supports.

SUPPORT INSTALLATION

Comply with NECA 1 and NECA 101 for installation requirements except as specified in this Article.

Raceway Support Methods: In addition to methods described in NECA 1, EMT, IMC, and RMC may be supported by openings through structure members, as permitted in NFPA 70.

Strength of Support Assemblies: Where not indicated, select sizes of components so strength will be adequate to carry present and future static loads within specified loading limits. Minimum static design load used for strength determination shall be weight of supported components plus 200 lb.

Mounting and Anchorage of Surface-Mounted Equipment and Components: Anchor and fasten electrical items and their supports to building structural elements by the following methods unless otherwise indicated by code:

To Wood: Fasten with lag screws or through bolts.
To New Concrete: Bolt to concrete inserts.
To Masonry: Approved toggle-type bolts on hollow masonry units and expansion anchor fasteners on solid masonry units.
To Existing Concrete: Expansion anchor fasteners.
Instead of expansion anchors, powder-actuated driven threaded studs provided with lock washers and nuts may be used in existing standard-weight concrete 4 inches thick or greater. Do not use for anchorage to lightweight-aggregate concrete or for slabs less than 4 inches thick.
To Steel: Welded threaded studs complying with AWS D1.1/D1.1M, with lock washers and nuts.
To Light Steel: Sheet metal screws.
Items Mounted on Hollow Walls and Nonstructural Building Surfaces: Mount cabinets, panelboards, disconnect switches, control enclosures, pull and junction boxes, transformers, and other devices on slotted-channel racks attached to substrate by means that meet seismic-restraint strength and anchorage requirements.

Drill holes for expansion anchors in concrete at locations and to depths that avoid reinforcing bars.

INSTALLATION OF FABRICATED METAL SUPPORTS

Comply with installation requirements in Division 05 Section "Metal Fabrications" for site-fabricated metal supports.

Cut, fit, and place miscellaneous metal supports accurately in location, alignment, and elevation to support and anchor electrical materials and equipment.

Field Welding: Comply with AWS D1.1/D1.1M.

CONCRETE BASES

Construct concrete bases of dimensions indicated but not less than 4 inches larger in both directions than supported unit, and so anchors will be a minimum of 10 bolt diameters from edge of the base.

Use 3000-psi, 28-day compressive-strength concrete. Concrete materials, reinforcement, and placement requirements are specified in Division 03 Section "Cast-in-Place Concrete."

Anchor equipment to concrete base.
Place and secure anchorage devices. Use supported equipment manufacturer's setting drawings, templates, diagrams, instructions, and directions furnished with items to be embedded.
Install anchor bolts to elevations required for proper attachment to supported equipment.
Install anchor bolts according to anchor-bolt manufacturer's written instructions.

PAINTING

Touchup: Clean field welds and abraded areas of shop paint. Paint exposed areas immediately after erecting hangers and supports. Use same materials as used for shop painting. Comply with SSPC-PA 1 requirements for touching up field-painted surfaces.

Apply paint by brush or spray to provide minimum dry film thickness of 2.0 mils.

Galvanized Surfaces: Clean welds, bolted connections, and abraded areas and apply galvanizing-repair paint to comply with ASTM A 780.

END OF SECTION

THIS PAGE INTENTIONALLY LEFT BLANK

SECTION 26 05 33 RACEWAY AND BOXES FOR ELECTRICAL SYSTEMS

PART 1 - GENERAL

RELATED DOCUMENTS

Drawings and general provisions of the Contract, including General and Supplementary Conditions and Division 01 Specification Sections, apply to this Section.

SUMMARY

This Section includes raceways, fittings, boxes, enclosures, and cabinets for electrical wiring.

Related Sections include the following:

Division 26 Section "Underground Ducts and Raceways for Electrical Systems" for exterior ductbanks, manholes, and underground utility construction.

DEFINITIONS

EMT: Electrical metallic tubing.

ENT: Electrical nonmetallic tubing.

EPDM: Ethylene-propylene-diene terpolymer rubber.

FMC: Flexible metal conduit.

IMC: Intermediate metal conduit.

LFMC: Liquidtight flexible metal conduit.

LFNC: Liquidtight flexible nonmetallic conduit.

NBR: Acrylonitrile-butadiene rubber.

RNC: Rigid nonmetallic conduit.

SUBMITTALS

Product Data: For surface raceways, wireways and fittings, floor boxes, hinged-cover enclosures, and cabinets.

Shop Drawings: For the following raceway components. Include plans, elevations, sections, details, and attachments to other work.

Custom enclosures and cabinets.

For handholes and boxes for underground wiring, including the following:

Duct entry provisions, including locations and duct sizes.

Frame and cover design.

Grounding details.

Dimensioned locations of cable rack inserts, and pulling-in and lifting irons.

Joint details.

Coordination Drawings: Conduit routing plans, drawn to scale, on which the following items are shown and coordinated with each other, based on input from installers of the items involved:

Structural members in the paths of conduit groups with common supports.
HVAC and plumbing items and architectural features in the paths of conduit groups with common supports.

Qualification Data: For professional engineer and testing agency.

Source quality-control test reports.

QUALITY ASSURANCE

Electrical Components, Devices, and Accessories: Listed and labeled as defined in NFPA 70, Article 100, by a testing agency acceptable to authorities having jurisdiction, and marked for intended use.

Comply with NFPA 70.

PART 2 - PRODUCTS

METAL CONDUIT AND TUBING

Available Manufacturers: Subject to compliance with requirements, manufacturers offering products that may be incorporated into the Work include, but are not limited to, the following:

Manufacturers: Subject to compliance with requirements, provide products by one of the following:

AFC Cable Systems, Inc.
Alflex Inc.
Allied Tube & Conduit; a Tyco International Ltd. Co.
Anamet Electrical, Inc.; Anaconda Metal Hose.
Electri-Flex Co.
Manhattan/CDT/Cole-Flex.
Maverick Tube Corporation.
O-Z Gedney; a unit of General Signal.
Wheatland Tube Company.

Rigid Steel Conduit: ANSI C80.1.

Aluminum Rigid Conduit: ANSI C80.5.

IMC: ANSI C80.6.

PVC-Coated Steel Conduit: PVC-coated rigid steel conduit.

Comply with NEMA RN 1.
Coating Thickness: 0.040 inch, minimum.

EMT: ANSI C80.3.

FMC: Zinc-coated steel or aluminum.

LFMC: Flexible steel conduit with PVC jacket.

Fittings for Conduit (Including all Types and Flexible and Liquidtight), EMT, and Cable: NEMA FB 1; listed for type and size raceway with which used, and for application and environment in which installed.

Conduit Fittings for Hazardous (Classified) Locations: Comply with UL 886.
Fittings for EMT: compression type.
Coating for Fittings for PVC-Coated Conduit: Minimum thickness, 0.040 inch, with overlapping sleeves protecting threaded joints.

Joint Compound for Rigid Steel Conduit or IMC: Listed for use in cable connector assemblies, and compounded for use to lubricate and protect threaded raceway joints from corrosion and enhance their conductivity.

NONMETALLIC CONDUIT AND TUBING

Available Manufacturers: Subject to compliance with requirements, manufacturers offering products that may be incorporated into the Work include, but are not limited to, the following:

Manufacturers: Subject to compliance with requirements, provide products by one of the following:

AFC Cable Systems, Inc.
Anamet Electrical, Inc.; Anaconda Metal Hose.
Arnco Corporation.
CANTEX Inc.
CertainTeed Corp.; Pipe & Plastics Group.
Condux International, Inc.
ElecSYS, Inc.
Electri-Flex Co.
Lamson & Sessions; Carlon Electrical Products.
Manhattan/CDT/Cole-Flex.
RACO; a Hubbell Company.
Thomas & Betts Corporation.

ENT: NEMA TC 13.

RNC: NEMA TC 2, Type EPC-40-PVC, unless otherwise indicated.

LFNC: UL 1660.

Fittings for ENT and RNC: NEMA TC 3; match to conduit or tubing type and material.

Fittings for LFNC: UL 514B.

OPTICAL FIBER/COMMUNICATIONS CABLE RACEWAY AND FITTINGS

Available Manufacturers: Subject to compliance with requirements, manufacturers offering products that may be incorporated into the Work include, but are not limited to, the following:

Manufacturers: Subject to compliance with requirements, provide products by one of the following:

Arnco Corporation.
Endot Industries Inc.
IPEX Inc.

Lamson & Sessions; Carlon Electrical Products.

Description: Comply with UL 2024; flexible type, approved for general-use installation.

METAL WIREWAYS

Available Manufacturers: Subject to compliance with requirements, manufacturers offering products that may be incorporated into the Work include, but are not limited to, the following:

Manufacturers: Subject to compliance with requirements, provide products by one of the following:
Cooper B-Line, Inc.
Hoffman.
Square D; Schneider Electric.

Description: Sheet metal sized and shaped as indicated, NEMA 250, Type 1, 12, 3R, unless otherwise indicated.

Fittings and Accessories: All fittings shall be steel – NOT cast aluminum. Include couplings, offsets, elbows, expansion joints, adapters, hold-down straps, end caps, and other fittings to match and mate with wireways as required for complete system.

Wireway Covers: Hinged type.

Finish: Manufacturer's standard enamel finish.

NONMETALLIC WIREWAYS

Available Manufacturers: Subject to compliance with requirements, manufacturers offering products that may be incorporated into the Work include, but are not limited to, the following:

Manufacturers: Subject to compliance with requirements, provide products by one of the following:
Hoffman.
Lamson & Sessions; Carlon Electrical Products.

Description: Fiberglass polyester, extruded and fabricated to size and shape indicated, with no holes or knockouts. Cover is gasketed with oil-resistant gasket material and fastened with captive screws treated for corrosion resistance. Connections are flanged, with stainless-steel screws and oil-resistant gaskets.

Description: PVC plastic, extruded and fabricated to size and shape indicated, with snap-on cover and mechanically coupled connections with plastic fasteners.

Fittings and Accessories: Include couplings, offsets, elbows, expansion joints, adapters, hold-down straps, end caps, and other fittings to match and mate with wireways as required for complete system.

SURFACE RACEWAYS

Surface Metal Raceways: Galvanized steel with snap-on covers. Manufacturer's standard enamel finish in color selected by Architect.

Available Manufacturers: Subject to compliance with requirements, manufacturers offering products that may be incorporated into the Work include, but are not limited to, the following:
Manufacturers: Subject to compliance with requirements, provide products by one of the following:

Thomas & Betts Corporation.

Walker Systems, Inc.; Wiremold Company (The).

Wiremold Company (The); Electrical Sales Division.

Surface Nonmetallic Raceways: Two-piece construction, manufactured of rigid PVC with texture and color selected by Architect from manufacturer's standard colors.
Available Manufacturers: Subject to compliance with requirements, manufacturers offering products that may be incorporated into the Work include, but are not limited to, the following:
Manufacturers: Subject to compliance with requirements, provide products by one of the following:

Butler Manufacturing Company; Walker Division.

Enduro Systems, Inc.; Composite Products Division.

Hubbell Incorporated; Wiring Device-Kellems Division.

Lamson & Sessions; Carlon Electrical Products.

Panduit Corp.

Walker Systems, Inc.; Wiremold Company (The).

Wiremold Company (The); Electrical Sales Division.

BOXES, ENCLOSURES, AND CABINETS

Available Manufacturers: Subject to compliance with requirements, manufacturers offering products that may be incorporated into the Work include, but are not limited to, the following:

Manufacturers: Subject to compliance with requirements, provide products by one of the following:
Cooper Crouse-Hinds; Div. of Cooper Industries, Inc.
EGS/Appleton Electric.
Erickson Electrical Equipment Company.
Hoffman.
Hubbell Incorporated; Killark Electric Manufacturing Co. Division.
O-Z/Gedney; a unit of General Signal.
RACO; a Hubbell Company.
Robroy Industries, Inc.; Enclosure Division.
Scott Fetzer Co.; Adalet Division.
Spring City Electrical Manufacturing Company.
Thomas & Betts Corporation.
Walker Systems, Inc.; Wiremold Company (The).
Woodhead, Daniel Company; Woodhead Industries, Inc. Subsidiary.
Raychem is acceptable manufacturer for J-boxes

Electrical "J" box covers shall be marked with the panel name and number, the circuit (s) number (s), and the potential voltage. Example: Panel XX XX Circuits 1, 2 and 5 120 / 208v. Panel number shall list H, E, or L.

Telephone "J" box covers shall be marked with a triangle and the telephone room number in which it originates.

Data "J" box covers shall be marked with the word DATA and the data or computer room number in which it originates. Example: DATA Room XX XX

Sheet Metal Outlet and Device Boxes: NEMA OS 1.

Cast-Metal Outlet and Device Boxes: NEMA FB 1, aluminum, Type FD, with gasketed cover.

Nonmetallic Outlet and Device Boxes: NEMA OS 2.

Metal Floor Boxes: Cast or sheet metal rectangular.

Nonmetallic Floor Boxes: Nonadjustable, round.

Small Sheet Metal Pull and Junction Boxes: NEMA OS 1.

Cast-Metal Access, Pull, and Junction Boxes: NEMA FB 1, galvanized, cast iron with gasketed cover.

Hinged-Cover Enclosures: NEMA 250, Type 1, with continuous-hinge cover with flush latch, unless otherwise indicated.

Metal Enclosures: Steel, finished inside and out with manufacturer's standard enamel.

Nonmetallic Enclosures: Plastic.

Cabinets:

NEMA 250, Type 1, galvanized-steel box with removable interior panel and removable front, finished inside and out with manufacturer's standard enamel.

Hinged door in front cover with flush latch and concealed hinge.

Key latch to match panelboards.

Metal barriers to separate wiring of different systems and voltage.

Accessory feet where required for freestanding equipment.

HANDHOLES AND BOXES FOR EXTERIOR UNDERGROUND WIRING

Description: Comply with SCTE 77.

Color of Frame and Cover: Green.

Configuration: Units shall be designed for flush burial and have closed bottom, unless otherwise indicated.

Cover: Weatherproof, secured by tamper-resistant locking devices and having structural load rating consistent with enclosure.

Cover Finish: Nonskid finish shall have a minimum coefficient of friction of 0.50.

Cover Legend: Molded lettering, "ELECTRIC." as indicated for each service.

Conduit Entrance Provisions: Conduit-terminating fittings shall mate with entering ducts for secure, fixed installation in enclosure wall.

Handholes 12 inches wide by 24 inches long and larger shall have inserts for cable racks and pulling-in irons installed before concrete is poured.

All ground boxes shall be concrete with cast iron tops that are no higher than 1" above the finished grade with a gradual slope. Polymer-Concrete Handholes and Boxes with

Polymer-Concrete Cover: Molded of sand and aggregate, bound together with polymer resin, and reinforced with steel or fiberglass or a combination of the two.

Available Manufacturers: Subject to compliance with requirements, manufacturers offering products that may be incorporated into the Work include, but are not limited to, the following:

Armorcast Products Company.

Carson Industries LLC.

CDR Systems Corporation.

NewBasis.

SLEEVES FOR RACEWAYS

Steel Pipe Sleeves: ASTM A 53/A 53M, Type E, Grade B, Schedule 40, galvanized steel, plain ends.

Cast-Iron Pipe Sleeves: Cast or fabricated "wall pipe," equivalent to ductile-iron pressure pipe, with plain ends and integral waterstop, unless otherwise indicated.

Sleeves for Rectangular Openings: Galvanized sheet steel with minimum 0.052- or 0.138-inch thickness as indicated and of length to suit application.

Coordinate sleeve selection and application with selection and application of firestopping specified in Division 07 Section "Penetration Firestopping."

SLEEVE SEALS

Available Manufacturers: Subject to compliance with requirements, manufacturers offering products that may be incorporated into the Work include, but are not limited to, the following:

Advance Products & Systems, Inc.
Calpico, Inc.
Metraflex Co.
Pipeline Seal and Insulator, Inc.

Description: Modular sealing device, designed for field assembly, to fill annular space between sleeve and cable.

Sealing Elements: EPDM interlocking links shaped to fit surface of cable or conduit. Include type and number required for material and size of raceway or cable.

Pressure Plates: Plastic. Include two for each sealing element.

Connecting Bolts and Nuts: Carbon steel with corrosion-resistant coating of length required to secure pressure plates to sealing elements. Include one for each sealing element.

SOURCE QUALITY CONTROL FOR UNDERGROUND ENCLOSURES

Handhole and Pull-Box Prototype Test: Test prototypes of handholes and boxes for compliance with SCTE 77. Strength tests shall be for specified tier ratings of products supplied.

Tests of materials shall be performed by a independent testing agency.

Strength tests of complete boxes and covers shall be by either an independent testing agency or manufacturer. A qualified registered professional engineer shall certify tests by manufacturer.
Testing machine pressure gages shall have current calibration certification complying with ISO 9000 and ISO 10012, and traceable to NIST standards.

PART 3 - EXECUTION

RACEWAY APPLICATION

Outdoors: All exterior raceways shall be rigid galvanized steel. IMC, EMT, or Rigid Non-Metallic Tubing will be considered on a case-by-case basis. Apply raceway products as specified below, unless otherwise indicated:

Concealed Conduit, Aboveground: Rigid steel conduit IMC EMT.
Underground Conduit: RNC, Type EPC-40-PVC, direct buried.
Connection to Vibrating Equipment (Including Transformers and Hydraulic, Pneumatic, Electric Solenoid, or Motor-Driven Equipment): LFMC.
Boxes and Enclosures, Aboveground: NEMA 250, Type 3R.
Application of Handholes and Boxes for Underground Wiring:

Handholes and Pull Boxes in Driveway, Parking Lot, and Off-Roadway Locations, Subject to Occasional, Nondeliberate Loading by Heavy Vehicles: Polymer concrete, SCTE 77, Tier 15 structural load rating.

Handholes and Pull Boxes in Sidewalk and Similar Applications with a Safety Factor for Nondeliberate Loading by Vehicles: Polymer-concrete units, SCTE 77, Tier 8 structural load rating.

Handholes and Pull Boxes Subject to Light-Duty Pedestrian Traffic Only: Fiberglass-reinforced polyester resin, structurally tested according to SCTE 77 with 3000-lbf vertical loading.

Comply with the following indoor applications, unless otherwise indicated:

Exposed, Not Subject to Physical Damage: EMT.
Exposed, Not Subject to Severe Physical Damage: EMT.
Exposed and Subject to Severe Physical Damage: Rigid steel conduit or IMC. Includes raceways in the following locations:

Loading dock.

Corridors used for traffic of mechanized carts, forklifts, and pallet-handling units.

Mechanical rooms.

Concealed in Ceilings and Interior Walls and Partitions: EMT.
Connection to Vibrating Equipment (Including Transformers and Hydraulic, Pneumatic, Electric Solenoid, or Motor-Driven Equipment): FMC, except use LFMC in damp or wet locations.
Damp or Wet Locations: Rigid steel conduit or IMC.
Raceways for Optical Fiber or Communications Cable in Spaces Used for Environmental Air: EMT.
Raceways for Optical Fiber or Communications Cable Risers in Vertical Shafts: EMT.

Raceways for Concealed General Purpose Distribution of Optical Fiber or Communications Cable: EMT.
Boxes and Enclosures: NEMA 250, Type 1, except use NEMA 250, Type 4, stainless steel in damp or wet locations.

Minimum Raceway Size: 3/4-inch trade size.

Raceway Fittings: Compatible with raceways and suitable for use and location.
Rigid and Intermediate Steel Conduit: Use threaded rigid steel conduit fittings, unless otherwise indicated.
PVC Externally Coated, Rigid Steel Conduits: Use only fittings listed for use with that material. Patch and seal all joints, nicks, and scrapes in PVC coating after installing conduits and fittings. Use sealant recommended by fitting manufacturer.

Do not install aluminum conduits in contact with concrete.

Spare conduit shall be provided on all sides of new buildings, under drives and sidewalks, from outside to inside the building, between parking lots and medians, and at light pole standards for future security.

INSTALLATION

Comply with NECA 1 for installation requirements applicable to products specified in Part 2 except where requirements on Drawings or in this Article are stricter.

Keep raceways at least 6 inches away from parallel runs of flues and steam or hot-water pipes. Install horizontal raceway runs above water and steam piping.

Complete raceway installation before starting conductor installation.

J-boxes shall be permanently labeled with panel and circuit numbers. Panel number shall list H, E, or L.

Support raceways as specified in Division 26 Section "Hangers and Supports for Electrical Systems."

Arrange stub-ups so curved portions of bends are not visible above the finished slab.

Install no more than the equivalent of three 90-degree bends in any conduit run except for communications conduits, for which fewer bends are allowed.

Conceal conduit and EMT within finished walls, ceilings, and floors, unless otherwise indicated.

PVC pipe is not permitted in return air plenums (environmental air handling spaces).

Raceways Embedded in Slabs:
Run conduit larger than 1-inch trade size, parallel or at right angles to main reinforcement. Where at right angles to reinforcement, place conduit close to slab support.
Arrange raceways to cross building expansion joints at right angles with expansion fittings.
Change from ENT to RNC, Type EPC-40-PVC, rigid steel conduit, or IMC before rising above the floor.

Threaded Conduit Joints, Exposed to Wet, Damp, Corrosive, or Outdoor Conditions: Apply listed compound to threads of raceway and fittings before making up joints. Follow compound manufacturer's written instructions.

Raceway Terminations at Locations Subject to Moisture or Vibration: Use insulating bushings to protect conductors, including conductors smaller than No. 4 AWG.

Install pull wires in empty raceways. Use polypropylene or monofilament plastic line with not less than 200-lb tensile strength. Leave at least 12 inches of slack at each end of pull wire. They shall end in a covered "J" box. The cover shall be labeled with the SPARE designation and the panel name and number in which it originates. Example: SPARE Panel XX XX

Raceways for Optical Fiber and Communications Cable: Install raceways, metallic and nonmetallic, rigid and flexible, as follows:

3/4-Inch Trade Size and Smaller: Install raceways in maximum lengths of 50 feet.

1-Inch Trade Size and Larger: Install raceways in maximum lengths of 75 feet.

Install with a maximum of two 90-degree bends or equivalent for each length of raceway unless Drawings show stricter requirements. Separate lengths with pull or junction boxes or terminations at distribution frames or cabinets where necessary to comply with these requirements.

Install raceway sealing fittings at suitable, approved, and accessible locations and fill them with listed sealing compound. For concealed raceways, install each fitting in a flush steel box with a blank cover plate having a finish similar to that of adjacent plates or surfaces. Install raceway sealing fittings at the following points:

Where conduits pass from warm to cold locations, such as boundaries of refrigerated spaces.

Where otherwise required by NFPA 70.

Expansion-Joint Fittings for RNC: Install in each run of aboveground conduit that is located where environmental temperature change may exceed 30 deg F, and that has straight-run length that exceeds 25 feet.

Install expansion-joint fittings for each of the following locations, and provide type and quantity of fittings that accommodate temperature change listed for location:

Outdoor Locations Not Exposed to Direct Sunlight: 125 deg F temperature change.

Outdoor Locations Exposed to Direct Sunlight: 155 deg F temperature change.

Indoor Spaces: Connected with the Outdoors without Physical Separation: 125 deg F temperature change.

Attics: 135 deg F temperature change.

Install fitting(s) that provide expansion and contraction for at least 0.00041 inch per foot of length of straight run per deg F of temperature change.

Install each expansion-joint fitting with position, mounting, and piston setting selected according to manufacturer's written instructions for conditions at specific location at the time of installation.

Flexible Conduit Connections: Use maximum of 72 inches of flexible conduit for recessed and semirecessed lighting fixtures, equipment subject to vibration, noise transmission, or movement; and for transformers and motors.

Use LFMC in damp or wet locations subject to severe physical damage.

Use LFMC or LFNC in damp or wet locations not subject to severe physical damage.

Recessed Boxes in Masonry Walls: Saw-cut opening for box in center of cell of masonry block, and install box flush with surface of wall.

Set metal floor boxes level and flush with finished floor surface.

Set nonmetallic floor boxes level. Trim after installation to fit flush with finished floor surface.

INSTALLATION OF UNDERGROUND CONDUIT

Direct-Buried Conduit:

Excavate trench bottom to provide firm and uniform support for conduit. Prepare trench bottom as specified in Division 31 Section "Earth Moving" for pipe less than 6 inches in nominal diameter.

Install backfill as specified in Division 31 Section "Earth Moving."

After installing conduit, backfill and compact. Start at tie-in point, and work toward end of conduit run, leaving conduit at end of run free to move with expansion and contraction as temperature changes during this process. Firmly hand tamp backfill around conduit to provide maximum supporting strength. After placing controlled backfill to within 12 inches of finished grade, make final conduit connection at end of run and complete backfilling with normal compaction as specified in Division 31 Section "Earth Moving."

Install manufactured duct elbows for stub-ups at poles and equipment and at building entrances through the floor, unless otherwise indicated. Encase elbows for stub-up ducts throughout the length of the elbow.

Install manufactured rigid steel conduit elbows for stub-ups at poles and equipment and at building entrances through the floor.

Couple steel conduits to ducts with adapters designed for this purpose, and encase coupling with 3 inches of concrete.

For stub-ups at equipment mounted on outdoor concrete bases, extend steel conduit horizontally a minimum of 60 inches from edge of equipment pad or foundation. Install insulated grounding bushings on terminations at equipment.

Warning Planks: Bury warning planks approximately 12 inches above direct-buried conduits, placing them 24 inches o.c. Align planks along the width and along the centerline of conduit.

As an alternate, it shall be bid that all underground electrical service 110 volts or greater outside the paving or concrete slab shall be embedded in red concrete. The red concrete shall be two (2) inches thick on all sides. Red dye may not be applied to the top of the concrete. The base bid shall include a minimum of embedding all medium and high voltage circuits and larger duct banks in concrete.

INSTALLATION OF UNDERGROUND HANDHOLES AND BOXES

Install handholes and boxes level and plumb and with orientation and depth coordinated with connecting conduits to minimize bends and deflections required for proper entrances.

Unless otherwise indicated, support units on a level bed of crushed stone or gravel, graded from 1/2-inch sieve to No. 4 sieve and compacted to same density as adjacent undisturbed earth.

Elevation: In paved areas, set so cover surface will be flush with finished grade. Set covers of other enclosures 1 inch above finished grade.

Install removable hardware, including pulling eyes, cable stanchions, cable arms, and insulators, as required for installation and support of cables and conductors and as indicated. Select arm lengths to be long enough to provide spare space for future cables, but short enough to preserve adequate working clearances in the enclosure.

Field-cut openings for conduits according to enclosure manufacturer's written instructions. Cut wall of enclosure with a tool designed for material to be cut. Size holes for terminating fittings to be used, and seal around penetrations after fittings are installed.

It is preferred that buried J-box joints be made with heat shrink tape. Raychem #HVBT 2R, or LSCS approved equal is approved tape.

SLEEVE INSTALLATION FOR ELECTRICAL PENETRATIONS

Coordinate sleeve selection and application with selection and application of firestopping specified in Division 07 Section "Penetration Firestopping."

Concrete Slabs and Walls: Install sleeves for penetrations unless core-drilled holes or formed openings are used. Install sleeves during erection of slabs and walls.

Use pipe sleeves unless penetration arrangement requires rectangular sleeved opening.

Rectangular Sleeve Minimum Metal Thickness:

For sleeve cross-section rectangle perimeter less than 50 inches and no side greater than 16 inches, thickness shall be 0.052 inch.

For sleeve cross-section rectangle perimeter equal to, or greater than, 50 inches and 1 or more sides equal to, or greater than, 16 inches, thickness shall be 0.138 inch.

Fire-Rated Assemblies: Install sleeves for penetrations of fire-rated floor and wall assemblies unless openings compatible with firestop system used are fabricated during construction of floor or wall.

Cut sleeves to length for mounting flush with both surfaces of walls.

Extend sleeves installed in floors 2 inches above finished floor level.

Size pipe sleeves to provide 1/4-inch annular clear space between sleeve and raceway unless sleeve seal is to be installed.

Seal space outside of sleeves with grout for penetrations of concrete and masonry and with approved joint compound for gypsum board assemblies.

Interior Penetrations of Non-Fire-Rated Walls and Floors: Seal annular space between sleeve and raceway, using joint sealant appropriate for size, depth, and location of joint. Refer to Division 07 Section "Joint Sealants" for materials and installation.

Fire-Rated-Assembly Penetrations: Maintain indicated fire rating of walls, partitions, ceilings, and floors at raceway penetrations. Install sleeves and seal with firestop materials. Comply with Division 07 Section "Penetration Firestopping."

Roof-Penetration Sleeves: Seal penetration of individual raceways with flexible, boot-type flashing units applied in coordination with roofing work.

Aboveground, Exterior-Wall Penetrations: Seal penetrations using sleeves and mechanical sleeve seals. Select sleeve size to allow for 1-inch annular clear space between pipe and sleeve for installing mechanical sleeve seals.

Underground, Exterior-Wall Penetrations: Install cast-iron "wall pipes" for sleeves. Size sleeves to allow for 1-inch annular clear space between raceway and sleeve for installing mechanical sleeve seals.

SLEEVE-SEAL INSTALLATION

Install to seal underground, exterior wall penetrations.

Use type and number of sealing elements recommended by manufacturer for raceway material and size. Position raceway in center of sleeve. Assemble mechanical sleeve seals and install in annular space between raceway and sleeve. Tighten bolts against pressure plates that cause sealing elements to expand and make watertight seal.

FIRESTOPPING

Apply firestopping to electrical penetrations of fire-rated floor and wall assemblies to restore original fire-resistance rating of assembly. Firestopping materials and installation requirements are specified in Division 07 Section "Penetration Firestopping."

PROTECTION

Provide final protection and maintain conditions that ensure coatings, finishes, and cabinets are without damage or deterioration at time of Substantial Completion.

Repair damage to galvanized finishes with zinc-rich paint recommended by manufacturer.

Repair damage to PVC or paint finishes with matching touchup coating recommended by manufacturer.

END OF SECTION

SECTION 260553 - IDENTIFICATION FOR ELECTRICAL SYSTEMS

PART 1 - GENERAL

RELATED DOCUMENTS

Drawings and general provisions of the Contract, including General and Supplementary Conditions and Division 01 Specification Sections, apply to this Section.

SUMMARY

Section Includes:
- Identification for raceways.
- Identification of power and control cables.
- Identification for conductors.
- Underground-line warning tape.
- Warning labels and signs.
- Instruction signs.
- Equipment identification labels.
- Miscellaneous identification products.

SUBMITTALS

Product Data: For each electrical identification product indicated.

Samples: For each type of label and sign to illustrate size, colors, lettering style, mounting provisions, and graphic features of identification products.

Identification Schedule: An index of nomenclature of electrical equipment and system components used in identification signs and labels.
- Include intended label for each Electrical equipment for review.

QUALITY ASSURANCE

Comply with ANSI A13.1.

Comply with NFPA 70.

Comply with 29 CFR 1910.144 and 29 CFR 1910.145.

Comply with ANSI Z535.4 for safety signs and labels.

Adhesive-attached labeling materials, including label stocks, laminating adhesives, and inks used by label printers, shall comply with UL 969.

COORDINATION

Coordinate identification names, abbreviations, colors, and other features with requirements in other Sections requiring identification applications, Drawings, Shop Drawings, manufacturer's wiring diagrams, and the Operation and Maintenance Manual; and with those required by codes, standards, and 29 CFR 1910.145. Use consistent designations throughout Project.

Coordinate installation of identifying devices with completion of covering and painting of surfaces where devices are to be applied.

Coordinate installation of identifying devices with location of access panels and doors.

Install identifying devices before installing acoustical ceilings and similar concealment.

PART 2 - PRODUCTS

POWER RACEWAY IDENTIFICATION MATERIALS

Comply with ANSI A13.1 for minimum size of letters for legend and for minimum length of color field for each raceway size.

Colors for Raceways Carrying Circuits at 600 V or Less:
Black letters on an orange field.
Legend: Indicate voltage and system or service type.

Colors for Raceways Carrying Circuits at More Than 600 V:
Black letters on an orange field.
Legend: "DANGER CONCEALED HIGH VOLTAGE WIRING" with 3-inch- high letters on 20-inch centers.

Self-Adhesive Vinyl Labels for Raceways Carrying Circuits at 600 V or Less: Preprinted, flexible label laminated with a clear, weather- and chemical-resistant coating and matching wraparound adhesive tape for securing ends of legend label.

Snap-Around Labels for Raceways Carrying Circuits at 600 V or Less: Slit, pretensioned, flexible, preprinted, color-coded acrylic sleeve, with diameter sized to suit diameter of raceway or cable it identifies and to stay in place by gripping action.

Snap-Around, Color-Coding Bands for Raceways Carrying Circuits at 600 V or Less: Slit, pretensioned, flexible, solid-colored acrylic sleeve, 2 inches long, with diameter sized to suit diameter of raceway or cable it identifies and to stay in place by gripping action.

Tape and Stencil for Raceways Carrying Circuits More Than 600 V: 4-inch-wide black stripes on 10-inch centers diagonally over orange background that extends full length of raceway or duct and is 12 inches wide. Stop stripes at legends.

Metal Tags: Brass or aluminum, 2 by 2 by 0.05 inch, with stamped legend, punched for use with self-locking cable tie fastener.

Write-On Tags: Polyester tag, 0.010 inch thick, with corrosion-resistant grommet and cable tie for attachment to conductor or cable.
Marker for Tags: Permanent, waterproof, black ink marker recommended by tag manufacturer.
Marker for Tags: Machine-printed, permanent, waterproof, black ink marker recommended by printer manufacturer.

ARMORED AND METAL-CLAD CABLE IDENTIFICATION MATERIALS

Comply with ANSI A13.1 for minimum size of letters for legend and for minimum length of color field for each raceway and cable size.

Colors for Raceways Carrying Circuits at 600 V and Less:

Black letters on an orange field.
Legend: Indicate voltage and system or service type.

Colors for Raceways Carrying Circuits at More Than 600 V:
Black letters on an orange field.
Legend: "DANGER CONCEALED HIGH VOLTAGE WIRING" with 3-inch- high letters on 20-inch centers.

Self-Adhesive Vinyl Labels: Preprinted, flexible label laminated with a clear, weather- and chemical-resistant coating and matching wraparound adhesive tape for securing ends of legend label.

Self-Adhesive Vinyl Tape: Colored, heavy duty, waterproof, fade resistant; 2 inches wide; compounded for outdoor use.

POWER AND CONTROL CABLE IDENTIFICATION MATERIALS

Comply with ANSI A13.1 for minimum size of letters for legend and for minimum length of color field for each raceway and cable size.

Self-Adhesive Vinyl Labels: Preprinted, flexible label laminated with a clear, weather- and chemical-resistant coating and matching wraparound adhesive tape for securing ends of legend label.

Metal Tags: Brass or aluminum, 2 by 2 by 0.05 inch, with stamped legend, punched for use with self-locking cable tie fastener.

Write-On Tags: Polyester tag, 0.010 inch thick, with corrosion-resistant grommet and cable tie for attachment to conductor or cable.
Marker for Tags: Permanent, waterproof, black ink marker recommended by tag manufacturer.
Marker for Tags: Machine-printed, permanent, waterproof, black ink marker recommended by printer manufacturer.

Snap-Around Labels: Slit, pretensioned, flexible, preprinted, color-coded acrylic sleeve, with diameter sized to suit diameter of raceway or cable it identifies and to stay in place by gripping action.

Snap-Around, Color-Coding Bands: Slit, pretensioned, flexible, solid-colored acrylic sleeve, 2 inches long, with diameter sized to suit diameter of raceway or cable it identifies and to stay in place by gripping action.

CONDUCTOR IDENTIFICATION MATERIALS

Color-Coding Conductor Insulation: Use fully-colored phase-identification insulation in lieu of “phase taping” for all sizes.

Self-Adhesive Vinyl Labels: Preprinted, flexible label laminated with a clear, weather- and chemical-resistant coating and matching wraparound adhesive tape for securing ends of legend label.

Snap-Around Labels: Slit, pretensioned, flexible, preprinted, color-coded acrylic sleeve, with diameter sized to suit diameter of raceway or cable it identifies and to stay in place by gripping action.

Snap-Around, Color-Coding Bands: Slit, pretensioned, flexible, solid-colored acrylic sleeve, 2 inches long, with diameter sized to suit diameter of raceway or cable it identifies and to stay in place by gripping action.

Marker Tapes: Vinyl or vinyl-cloth, self-adhesive wraparound type, with circuit identification legend machine printed by thermal transfer or equivalent process.

Write-On Tags: Polyester tag, 0.010 inch thick, with corrosion-resistant grommet and cable tie for attachment to conductor or cable.

Marker for Tags: Permanent, waterproof, black ink marker recommended by tag manufacturer.

Marker for Tags: Machine-printed, permanent, waterproof, black ink marker recommended by printer manufacturer.

FLOOR MARKING TAPE

2-inch- wide, 5-mil pressure-sensitive vinyl tape, with black and white stripes and clear vinyl overlay.

UNDERGROUND-LINE WARNING TAPE

Tape:

Recommended by manufacturer for the method of installation and suitable to identify and locate underground electrical and communications utility lines.

Printing on tape shall be permanent and shall not be damaged by burial operations.

Tape material and ink shall be chemically inert, and not subject to degrading when exposed to acids, alkalis, and other destructive substances commonly found in soils.

Color and Printing:

Comply with ANSI Z535.1 through ANSI Z535.5.

Inscriptions for Red-Colored Tapes: ELECTRIC LINE, HIGH VOLTAGE.

Inscriptions for Orange-Colored Tapes: TELEPHONE, COMMUNICATIONS CABLE, OPTICAL FIBER CABLE.

WARNING LABELS AND SIGNS

Comply with NFPA 70 and 29 CFR 1910.145.

Self-Adhesive Warning Labels: Factory-printed, multicolor, pressure-sensitive adhesive labels, configured for display on front cover, door, or other access to equipment unless otherwise indicated.

Baked-Enamel Warning Signs:

Preprinted aluminum signs, punched or drilled for fasteners, with colors, legend, and size required for application.

1/4-inch grommets in corners for mounting.

Nominal size, 7 by 10 inches.

Warning label and sign shall include, but are not limited to, the following legends:

Multiple Power Source Warning: "DANGER - ELECTRICAL SHOCK HAZARD - EQUIPMENT HAS MULTIPLE POWER SOURCES."

Workspace Clearance Warning: "WARNING - OSHA REGULATION - AREA IN FRONT OF ELECTRICAL EQUIPMENT MUST BE KEPT CLEAR FOR 36 INCHES."

EQUIPMENT IDENTIFICATION LABELS

Adhesive Film Label: Machine printed, in black, by thermal transfer or equivalent process. Minimum letter height shall be 3/8 inch.

Adhesive Film Label with Clear Protective Overlay: Machine printed, in black, by thermal transfer or equivalent process. Minimum letter height shall be 3/8 inch. Overlay shall provide a weatherproof and UV-resistant seal for label.

Self-Adhesive, Engraved, Laminated Acrylic or Melamine Label: Adhesive backed, with white letters on a dark-gray background. Minimum letter height shall be 3/8 inch.

Engraved, Laminated Acrylic or Melamine Label: Punched or drilled for screw mounting. White letters on a dark-gray background. Minimum letter height shall be 3/8 inch.

Stenciled Legend: In non-fading, waterproof, black ink or paint. Minimum letter height shall be 1 inch.

CABLE TIES

General-Purpose Cable Ties: Fungus inert, self extinguishing, one piece, self locking, Type 6/6 nylon.
Minimum Width: 3/16 inch.
Tensile Strength at 73 deg F, According to ASTM D 638: 12,000 psi.
Temperature Range: Minus 40 to plus 185 deg F.
Color: Black except where used for color-coding.

UV-Stabilized Cable Ties: Fungus inert, designed for continuous exposure to exterior sunlight, self extinguishing, one piece, self locking, Type 6/6 nylon.
Minimum Width: 3/16 inch.
Tensile Strength at 73 deg F, According to ASTM D 638: 12,000 psi.
Temperature Range: Minus 40 to plus 185 deg F.
Color: Black.

Plenum-Rated Cable Ties: Self extinguishing, UV stabilized, one piece, self locking.
Minimum Width: 3/16 inch.
Tensile Strength at 73 deg F, According to ASTM D 638: 7000 psi.
UL 94 Flame Rating: 94V-0.
Temperature Range: Minus 50 to plus 284 deg F.
Color: Black.

MISCELLANEOUS IDENTIFICATION PRODUCTS

Paint: Comply with requirements in Division 09 painting Sections for paint materials and application requirements. Select paint system applicable for surface material and location (exterior or interior).

Fasteners for Labels and Signs: Self-tapping, stainless-steel screws or stainless-steel machine screws with nuts and flat and lock washers.

PART 3 - EXECUTION

INSTALLATION

Verify identity of each item before installing identification products.

Location: Install identification materials and devices at locations for most convenient viewing without interference with operation and maintenance of equipment.

Apply identification devices to surfaces that require finish after completing finish work.

Self-Adhesive Identification Products: Clean surfaces before application, using materials and methods recommended by manufacturer of identification device.

Attach signs and plastic labels that are not self-adhesive type with mechanical fasteners appropriate to the location and substrate.

System Identification Color-Coding Bands for Raceways and Cables: Each color-coding band shall completely encircle cable or conduit. Place adjacent bands of two-color markings in contact, side by side. Locate bands at changes in direction, at penetrations of walls and floors, at 50-foot maximum intervals in straight runs, and at 25-foot maximum intervals in congested areas.

Aluminum Wraparound Marker Labels and Metal Tags: Secure tight to surface of conductor or cable at a location with high visibility and accessibility.

Cable Ties: For attaching tags. Use general-purpose type, except as listed below:
Outdoors: UV-stabilized nylon.
In Spaces Handling Environmental Air: Plenum rated.

Underground-Line Warning Tape: During backfilling of trenches install continuous underground-line warning tape directly above line at 6 to 8 inches (below finished grade. Use multiple tapes where width of multiple lines installed in a common trench exceeds 16 inches overall.

Painted Identification: Comply with requirements in Division 09 painting Sections for surface preparation and paint application.

IDENTIFICATION SCHEDULE

Concealed Raceways, Duct Banks, More Than 600 V, within Buildings: Tape and stencil 4-inch- wide black stripes on 10-inch centers over orange background that extends full length of raceway or duct and is 12 inches wide. Stencil legend "DANGER CONCEALED HIGH VOLTAGE WIRING" with 3-inch-high black letters on 20-inch centers. Stop stripes at legends. Apply to the following finished surfaces:
Floor surface directly above conduits running beneath and within 12 inches of a floor that is in contact with earth or is framed above unexcavated space.
Wall surfaces directly external to raceways concealed within wall.
Accessible surfaces of concrete envelope around raceways in vertical shafts, exposed in the building, or concealed above suspended ceilings.

Accessible Raceways and Metal-Clad Cables, 600 V or Less, for Service, Feeder, and Branch Circuits More Than 30 A, and 120 V to ground: Identify with self-adhesive vinyl label. Install labels at 10-foot maximum intervals.

Accessible Raceways and Cables within Buildings: Identify the covers of each junction and pull box of the following systems with self-adhesive vinyl labels with the wiring system legend and system voltage. System legends shall be as follows:

Emergency Power.
Power.

Power-Circuit Conductor Identification, 600 V or Less: Use fully-colored insulation the entire length of the wire to identify the phase.

Color-Coding for Phase and Voltage Level Identification, 600 V or Less: Use colors listed below for ungrounded service, feeder, and branch-circuit conductors.

Color shall be factory applied or field applied for sizes larger than No. 8 AWG, if authorities having jurisdiction permit.

Colors for 208Y/120 VAC Circuits:

Phase A: Black.
Phase B: Red.
Phase C: Blue.

Colors for 480Y/277 VAC Circuits:

Phase A: Brown.
Phase B: Purple.
Phase C: Yellow.

Install instructional sign including the color-code for grounded and ungrounded conductors using adhesive-film-type labels.

Conductors to Be Extended in the Future: Attach marker tape to conductors and list source.

Auxiliary Electrical Systems Conductor Identification: Identify field-installed alarm, control, and signal connections.

Identify conductors, cables, and terminals in enclosures and at junctions, terminals, and pull points. Identify by system and circuit designation.
Use system of marker tape designations that is uniform and consistent with system used by manufacturer for factory-installed connections.
Coordinate identification with Project Drawings, manufacturer's wiring diagrams, and the Operation and Maintenance Manual.

Locations of Underground Lines: Identify with underground-line warning tape for power, lighting, communication, and control wiring and optical fiber cable.

Limit use of underground-line warning tape to direct-buried cables.
Install underground-line warning tape for both direct-buried cables and cables in raceway.

Workspace Indication: Install floor marking tape to show working clearances in the direction of access to live parts. Workspace shall be as required by NFPA 70 and 29 CFR 1926.403 unless otherwise indicated. Do not install at flush-mounted panelboards and similar equipment in finished spaces.

Warning Labels for Indoor Cabinets, Boxes, and Enclosures for Power and Lighting: Self-adhesive warning labels.

Comply with 29 CFR 1910.145.
Identify system voltage with black letters on an orange background.
Apply to exterior of door, cover, or other access.

For equipment with multiple power or control sources, apply to door or cover of equipment including, but not limited to, the following:

Power transfer switches.

Controls with external control power connections.

Operating Instruction Signs: Install instruction signs to facilitate proper operation and maintenance of electrical systems and items to which they connect. Install instruction signs with approved legend where instructions are needed for system or equipment operation.

Emergency Operating Instruction Signs: Install instruction signs with white legend on a red background with minimum 3/8-inch- high letters for emergency instructions at equipment used for power transfer.

Equipment Identification Labels: On each unit of equipment, install unique designation label that is consistent with wiring diagrams, schedules, and the Operation and Maintenance Manual. Apply labels to disconnect switches and protection equipment, central or master units, control panels, control stations, terminal cabinets, and racks of each system. Systems include power, lighting, control, communication, signal, monitoring, and alarm systems unless equipment is provided with its own identification.

Labeling Instructions:

Indoor Equipment: Self-adhesive, engraved, laminated acrylic or melamine label. Unless otherwise indicated, provide a single line of text with 1/2-inch-high letters on 1-1/2-inch- high label; where two lines of text are required, use labels 2 inches high.

Outdoor Equipment: Engraved, laminated acrylic or melamine label.

Elevated Components: Increase sizes of labels and letters to those appropriate for viewing from the floor.

Unless provided with self-adhesive means of attachment, fasten labels with appropriate mechanical fasteners that do not change the NEMA or NRTL rating of the enclosure.

Equipment to Be Labeled:

Panelboards: Typewritten directory of circuits in the location provided by panelboard manufacturer. Panelboard identification shall be laminated acrylic or melamine label.

Enclosures and electrical cabinets.

Access doors and panels for concealed electrical items.

Switchboards.

Transformers: Label that includes tag designation shown on Drawings for the transformer, feeder, and panelboards or equipment supplied by the secondary.

Substations.

Emergency system boxes and enclosures.

Motor-control centers.

Enclosed switches.

Enclosed circuit breakers.

Enclosed controllers.

Variable-speed controllers.

Push-button stations.

Power transfer equipment.

Contactors.

Remote-controlled switches, dimmer modules, and control devices.

Battery-inverter units.

Battery racks.

Power-generating units.

Monitoring and control equipment.

END OF SECTION

SECTION 26 11 00 FIRE STOPPING

PART 1 - GENERAL

RELATED DOCUMENTS

Requirements of Division 16 "COMMON WORK RESULTS FOR ELECTRICAL" apply to this Section.

SECTION INCLUDES

Fireproof fire stopping materials.

SUBMITTALS: SUBMIT THE FOLLOWING IN ACCORDANCE WITH SECTION 260500.

Fireproof fire stopping materials.

Provide U.L. category and file numbers of products.

QUALITY ASSURANCE: COMPLY WITH THE FOLLOWING.

ASTM E814 (UL 1479) - Test Method of Fire Tests of Through-Penetration Fire stops.

NEC 300-21 and NEC 800-52(b).

Conform to applicable code for fire resistance ratings and surface burning characteristics.

Provide certificate of compliance from authority having jurisdiction indicating approval of combustibility.

SEQUENCING

Sequence work to permit fire stopping materials to be installed after adjacent and surrounding work is complete.

PART 2 - PRODUCTS

MANUFACTURERS

Flame-Safe FS500, FST600, FS900, FST900, or FSP1000.

Dow Corning 306548 Silicone RTV Foam.

3M Fire Barrier Penetration Sealing Systems.

PENSIL 851, General Electric Company.

PERFORMANCE REQUIREMENTS

The requirements of this section shall be provided in addition to the requirements of Division 7.

Maintain required classification, fire, acoustic, and vapor barrier ratings for electrical installations penetrating walls, ceilings, and floors per ASTM E814 (UL 1479), NEC 300-21 and NEC 800-52(b).

Penetrations of classified area walls, ceiling and floors shall be sealed with the same material to maintain the integrity of area classification.

Penetrations of fire-rated walls, ceilings, and floors shall be sealed with a UL listed Through-Penetrations Fire-Stop System.

Penetrations of non-fire-rated walls, ceilings, and floors shall be filled and finished using the same finish material as the wall, ceiling, or floor.

Outlet box and lighting fixture installation in fire-rated walls, ceilings, and floors shall be in accordance with the UL Fire Resistance Directory.

Fire safety system shall not require de-rating the ampacity of electrical conductors.

Where mastic is used to seal the surface of the fire stop, the mastic shall be non-hardening.

Fire safety material shall not contract to allow transmission of smoke or water prior to exposure of a fire condition.

PART 3 - EXECUTION

EXAMINATION

Verify that openings are ready to receive the work of this section.

PREPARATION

Clean substrate surfaces of dirt, dust, grease, oil, loose material, or other matter which may affect bond of fire stopping material.

Remove incompatible materials which affect bond.

APPLICATION

Apply primer and materials in accordance with manufacturer's instructions.

Apply fire stopping material in sufficient thickness to achieve rating to uniform density and texture.

Install material at walls or partition openings which contain penetrating sleeves, piping, ductwork, conduit, and other items requiring fire stopping.

Sleeves shall be of suitable length to accommodate fire stopping system used. Where conduit passes through a sleeve, the clearance around the conduit shall not be less than 1/2".

CLEANING

Clean adjacent surfaces of fire stopping materials.

PROTECTION OF FINISHED WORK

Protect adjacent surfaces from damage by material installation.

END OF SECTION

SECTION 262200 - LOW-VOLTAGE TRANSFORMERS

PART 1 - GENERAL

RELATED DOCUMENTS

Drawings and general provisions of the Contract, including General and Supplementary Conditions and Division 01 Specification Sections, apply to this Section.

SUMMARY

This Section includes the following types of dry-type transformers rated 600 V and less, with capacities up to 750 kVA:

Distribution transformers.
Harmonics Mitigating (Canceling) Transformers.

SUBMITTALS

Product Data: Include rated nameplate data, capacities, weights, dimensions, minimum clearances, installed devices and features, and performance for each type and size of transformer indicated.

Shop Drawings: Detail equipment assemblies and indicate dimensions, weights, loads, required clearances, method of field assembly, components, and location and size of each field connection.

Qualification Data: For testing agency.

Source quality-control test reports.

Field quality-control test reports.

Operation and Maintenance Data.

QUALITY ASSURANCE

Source Limitations: Obtain each transformer type through one source from a single manufacturer.

Electrical Components, Devices, and Accessories: Listed and labeled as defined in NFPA 70, Article 100, by a testing agency acceptable to authorities having jurisdiction, and marked for intended use.

Comply with IEEE C57.12.91, "Test Code for Dry-Type Distribution and Power Transformers."

Harmonics Canceling Transformers: NEMA ST-1, TP-1, TP-2 and IEEE-519-1992 compliance.

United States Department of Energy (DOE), United States Code (USC) and Code of Federal Regulations (CFR)

42 USC - Energy Conservation Program for Consumer Products Other Than Automobiles

10 CFR 431 – Energy Efficiency Program for Certain Commercial and Industrial Equipment, Subpart K – Distribution Transformers
Appendix A to Subpart K of 10 CFR part 431 - Uniform Test Method for Measuring the Energy Consumption of Distribution Transformers

DELIVERY, STORAGE, AND HANDLING

Temporary Heating: Apply temporary heat according to manufacturer's written instructions within the enclosure of each ventilated-type unit, throughout periods during which equipment is not energized and when transformer is not in a space that is continuously under normal control of temperature and humidity.

COORDINATION

Coordinate size and location of concrete bases with actual transformer provided. Cast anchor-bolt inserts into bases. Concrete, reinforcement, and formwork requirements are specified in Division 03.

Coordinate installation of wall-mounting and structure-hanging supports with actual transformer provided.

PART 2 - PRODUCTS

MANUFACTURERS (STANDARD DRY-TYPE)

Manufacturers: Subject to compliance with requirements, provide products by one of the following:
ASEA Brown Boveri (ABB) /General Electric.
Schneider Electric / Square D.
Siemens.
Eaton / Cutler-Hammer.

GENERAL TRANSFORMER REQUIREMENTS

Description: Factory-assembled and -tested, air-cooled units for 60-Hz service.

Cores: Grain-oriented, non-aging silicon steel.
Low loss type with minimum efficiencies per NEMA TP1 and 10 CFR §431.196(a)(2) (DOE 2016 requirements) when operated at 35% of full load capacity. Efficiency shall be tested in accordance with NEMA TP2 and 10 CFR §431.193.

Coils: Continuous windings without splices except for taps.
Internal Coil Connections: Brazed or pressure type.
Coil Material: Copper.

DISTRIBUTION TRANSFORMERS

Comply with NEMA ST 20, and list and label as complying with UL 1561.

Cores: One leg per phase.

Enclosure: Ventilated, NEMA 250, Type 2.

Core and coil shall be encapsulated within resin compound, sealing out moisture and air.

Taps for Transformers Smaller than 3 kVA: None.

Taps for Transformers 7.5 to 24 kVA: Two 5 percent taps below rated voltage.

Taps for Transformers 25 kVA and Larger: Two 2.5 percent taps above and two 2.5 percent taps below normal full capacity.

Insulation Class: 220 deg C, UL-component-recognized insulation system with a maximum of 80 deg C rise above 40 deg C ambient temperature.

Energy Efficiency for Transformers Rated 15 kVA and Larger:
Complying with NEMA TP 1, Class 1 efficiency levels.
Tested according to NEMA TP 2.

K-Factor Rating: Transformers indicated to be K-factor rated shall comply with UL 1561 requirements for non-sinusoidal load current-handling capability to the degree defined by designated K-factor.
Unit shall not overheat when carrying full-load current with harmonic distortion corresponding to designated K-factor.
Indicate value of K-factor on transformer nameplate.

Wall Brackets: Manufacturer's standard brackets.

Fungus Proofing: Permanent fungicidal treatment for coil and core.

Low-Sound-Level Requirements: Minimum of 3 dBA less than NEMA ST 20 standard sound levels when factory tested according to IEEE C57.12.91.

Low-Sound-Level Requirements: Maximum sound levels, when factory tested, shall be in according to IEEE C57.12.91.

HARMONIC MITIGATING TRANSFORMERS

Zig-Zag Secondary with Phase Shift as noted.

Manufacturers:
Basis of Design: Powersmiths International T-1000, or equal by:
Power Quality International
Mirus International

Insulation and Varnish systems: 220℃. Class, Epoxy polyester impregnation, 105℃. Temperature Rise in 40℃. Ambient.

All terminals. Including those for changing taps, must be readily accessible. Windings shall be continuous with terminations brazed or welded. 10KV BIL.

Compatible with all types of linear and non-linear current and future loads.

Impedance: Between 3.0% and 5.0% at rated KVA.

Zero sequence Impedance/reactance less than 0.95% and 0.3% respectively.

Zero sequence currents not coupled into primary windings.

Voltage Taps: Two 2.5% above and below nominal primary voltage.

Enclosure: NEMA 1 or 3 as required.

Efficiencies. Meet DOE 2016 Minimum Efficiency Requirements.

IDENTIFICATION DEVICES

Nameplates: Engraved, laminated-plastic or metal nameplate for each transformer, mounted with corrosion-resistant screws. Nameplates and label products are specified in Division 26 Section "Identification for Electrical Systems."

SOURCE QUALITY CONTROL

Test and inspect transformers according to IEEE C57.12.91.

Factory Sound-Level Tests: Conduct sound-level tests on equipment for this Project.

PART 3 - EXECUTION

EXAMINATION

Receive, inspect, handle, and store transformers according to NEMA PB 1.1.

Examine transformers before installation. Reject transformers that are damaged or rusted or have been subjected to water saturation. Reject transformers that have been left in precipitation of any kind or under leaks of any fluid, even if still in original packaging.

Examine conditions for compliance with enclosure- and ambient-temperature requirements for each transformer.

Verify that field measurements are as needed to maintain working clearances required by NFPA 70 and manufacturer's written instructions.

Examine walls, floors, roofs, and concrete bases for suitable mounting conditions where transformers will be installed.

Verify that ground connections are in place and requirements in Division 26 Section "Grounding and Bonding for Electrical Systems" have been met. Maximum ground resistance shall be 5 ohms at location of transformer.

Proceed with installation only after unsatisfactory conditions have been corrected.

INSTALLATION

Install wall-mounting transformers level and plumb with wall brackets fabricated by transformer manufacturer.

Brace wall-mounting transformers as specified in Division 26 Section "Vibration and Seismic Controls for Electrical Systems.

Construct concrete bases and anchor floor-mounting transformers according to manufacturer's written.

Install ALL floor mounted transformers as indicated on 6” housekeeping pads 3-inches larger than transformer, complying with manufacturer's written instructions, applicable requirements of NEC, NESC, NEMA, ANSI and IEEE standards, and in accordance with recognized industry practices to ensure that products fulfill requirements. Provide

NEC working clearances in front of transformers assuming they will require examination while energized.

Coordinate transformer installation work with electrical raceway and wire/cable work, as necessary for proper interface.

Transformers shall be on isolation pads. Install floor mounted units with bolts to equipment pad with neoprene/cork vibration mounts between transformer and pad. Comply with manufacturer's indicated installation method, if any.

Connect transformer units to electrical wiring system with flexible metal conduit or liquid tight flexible metal conduit. Comply with the requirements of other Division 16 sections.

Tighten electrical connectors and terminals, including screws and bolts, in accordance with equipment manufacturer's published torque tightening values for equipment connectors. Where manufacturer's torquing requirements are not indicated, tighten connectors and terminals to comply with tightening torques specified in UL STD 486A.

Back off shipping bolts on internal vibration isolators.

CONNECTIONS

Ground equipment according to Division 26 Section "Grounding and Bonding for Electrical Systems."

Connect wiring according to Division 26 Section "Low-Voltage Electrical Power Conductors and Cables."

FIELD QUALITY CONTROL

Manufacturer's Field Service: Engage a factory-authorized service representative to inspect, test, and adjust components, assemblies, and equipment installations, including connections. Report results in writing.

Perform tests and inspections and prepare test reports.

Manufacturer's Field Service: Engage a factory-authorized service representative to inspect components, assemblies, and equipment installations, including connections, and to assist in testing.

Tests and Inspections:

Perform each visual and mechanical inspection and electrical test stated in NETA Acceptance Testing Specification. Certify compliance with test parameters.

Remove and replace units that do not pass tests or inspections and retest as specified above.

Infrared Scanning: Two months after Substantial Completion, perform an infrared scan of transformer connections.

Use an infrared-scanning device designed to measure temperature or detect significant deviations from normal values. Provide documentation of device calibration.

Perform 2 follow-up infrared scans of transformers, one at 4 months and the other at 11 months after Substantial Completion.

Prepare a certified report identifying transformer checked and describing results of scanning. Include notation of deficiencies detected, remedial action taken, and scanning observations after remedial action.

Test Labeling: On completion of satisfactory testing of each unit, attach a dated and signed "Satisfactory Test" label to tested component.

Provide equipment grounding connections for power/distribution transformers, sizes per NEC. Tighten connections to comply with tightening torques specified in UL STD 486A to assure permanent and effective grounding.

Transformer Testing

Certified Test Reports in accordance with TP-1-2002 and TP-2.

Open Circuit transformer tests, for calculating percent zero-sequence impedances and reactance as follows:

With the transformer's primary terminals open-circuited, make a low impedance connection between secondary Terminals X1, X2 and X3.

Connect a variable 60HZ power source between Secondary Terminals X1, X2, X3 and X0, which includes precision revenue class voltage and current measurement instrumentation.

Increase 60HZ voltage across Terminals X1, X2, X3 and Terminal X0 until >2/3 full-scale readings are obtained on the voltage and current meters. In no case can the current reading exceed the full load rating of the winding under test. The values may be lower since impedance and reactance are linear.

Calculate impedance in Ohms based on the measured voltage and current values.

Based on the measured voltage, as a percentage of the rated voltage of the windings, calculate percent zero-sequence impedance and reactance.

Closed Circuit Transformer Tests, for calculating transformer core and copper losses as follows:

In accordance with e-Rated Transformer Corporation Standard Publications VAD1-2003 and VAD2- 2003.

Measure Primary and Secondary voltage and current differences simultaneously, using ‘revenue class’ instrumentation and calculate excitation or no-load losses and impedances/load losses.

Submit such reports as part of shop drawings submittals for each size typical transformers, based on tests done within a year or less time.

Submit such reports for all the transformers for the project, prior to shipment.

Design, manufacturing and testing of these transformers, in compliance with most current NEMA, IEEE and Industry standards and practices.

Transformer Loss Calculations based on primary and secondary voltage and current differences measured simultaneously.

ADJUSTING

Record transformer secondary voltage at each unit for at least 48 hours of typical occupancy period. Adjust transformer taps to provide optimum voltage conditions at secondary terminals. Optimum is defined as not exceeding nameplate voltage plus 10 percent and not being lower than nameplate voltage minus 3 percent at maximum load conditions. Submit recording and tap settings as test results.

Connect buck-boost transformers to provide nameplate voltage of equipment being served, plus or minus 5 percent, at secondary terminals.

Output Settings Report: Prepare a written report recording output voltages and tap settings.

CLEANING

Vacuum dirt and debris; do not use compressed air to assist in cleaning.

END OF SECTION

SECTION 26 27 26 WIRING DEVICES

PART 1 - GENERAL

RELATED DOCUMENTS

Drawings and general provisions of the Contract, including General and Supplementary Conditions and Division 01 Specification Sections, apply to this Section.

SUMMARY

This Section includes the following:

- Receptacles, receptacles with integral GFCI, and associated device plates.
- Twist-locking receptacles.
- Receptacles with integral surge suppression units.
- Hospital Grade
- Wall-box motion sensors.
- Isolated-ground receptacles.
- Snap switches and wall-box dimmers.
- Wall-switch and exterior occupancy sensors.
- Communications outlets.
- Pendant cord-connector devices.
- Cord and plug sets.
- Floor service outlets, poke-through assemblies, service poles, and multi-outlet assemblies.

DEFINITIONS

EMI: Electromagnetic interference.

GFCI: Ground-fault circuit interrupter.

Pigtail: Short lead used to connect a device to a branch-circuit conductor.

RFI: Radio-frequency interference.

TVSS: Transient voltage surge suppressor.

UTP: Unshielded twisted pair.

SUBMITTALS

Product Data: For each type of product indicated.

Shop Drawings: List of legends and description of materials and process used for pre-marking wall plates.

Samples: One for each type of device and wall plate specified, in each color specified.

Field quality-control test reports.

Operation and Maintenance Data: For wiring devices to include in all manufacturers' packing label warnings and instruction manuals that include labeling conditions.

QUALITY ASSURANCE

Source Limitations: Obtain each type of wiring device and associated wall plate through one source from a single manufacturer. Insofar as they are available, obtain all wiring devices and associated wall plates from a single manufacturer and one source.

Electrical Components, Devices, and Accessories: Listed and labeled as defined in NFPA 70, Article 100, by a testing agency acceptable to authorities having jurisdiction, and marked for intended use.

Comply with NFPA 70.

COORDINATION

Receptacles for Owner-Furnished Equipment: Match plug configuration.
Cord and Plug Sets: Match equipment requirements.

EXTRA MATERIALS

Furnish extra materials described in subparagraphs below that match products installed and that are packaged with protective covering for storage and identified with labels describing contents.
Service/Power Poles: One for every 10, but no less than one.
Floor Service Outlet Assemblies: One for every 10 but no less than one.
Poke-Through, Fire-Rated Closure Plugs: One for every five floor service outlets installed, but no fewer than two.
TVSS Receptacles: One for every 10 of each type installed, but no fewer than two of each type.

PART 2 - PRODUCTS

MANUFACTURERS

Manufacturers' Names: Shortened versions (shown in parentheses) of the following manufacturers' names are used in other Part 2 articles:
Pass & Seymour/Legrand
Hubbell Incorporated; Wiring Device-Kellems (Hubbell).
Leviton Mfg. Company Inc. (Leviton).

All devices shall be industrial grade. Verify type of cover plates with facilities directors.

STRAIGHT BLADE RECEPTACLES

Convenience Receptacles, 125 V, 20 A: Comply with NEMA WD 1, NEMA WD 6 configuration 5-20R, and UL 498.
Products: Subject to compliance with requirements, provide one of the following:

Pass & Seymour/Legrand ; 5381 (single), PS5362 (duplex), PT5362 (duplex)

Hubbell;HBL5351 (single), HBL5362 (duplex).

Leviton; 5891 (single), 5362 (duplex).

ENGINEER approved equal.

Hospital-Grade, Duplex Convenience Receptacles, 125 V, 20 A: Comply with NEMA WD 1, NEMA WD 6 configuration 5-20R, and UL 498 Supplement SD.

Products: Subject to compliance with requirements, provide one of the following:

Pass & Seymour/Legrand; 8301 (single), 8300H (duplex) OR PT8300

Hubbell; HBL8310 (single), HBL8300H (duplex).

Leviton; 8310 (single), 8300 (duplex).

ENGINEER approved equal.

Isolated-Ground, Duplex Convenience Receptacles, 125 V, 20 A: Comply with NEMA WD 1, NEMA WD 6 configuration 5-20R, and UL 498.

Products: Subject to compliance with requirements, provide one of the following:

Hubbell; 5362IG.

Leviton; 5362-IG.

Pass & Seymour; IG5362 OR PTIG5362.

ENGINEER approved equal.

Description: Straight blade; equipment grounding contacts shall be connected only to the green grounding screw terminal of the device and with inherent electrical isolation from mounting strap. Isolation shall be integral to receptacle construction and not dependent on removable parts.

Tamper-Resistant Convenience Receptacles, 125 V, 20 A: Comply with NEMA WD 1, NEMA WD 6 configuration 5-20R, and UL 498.

Products: Subject to compliance with requirements, provide one of the following:

Pass & Seymour; TR63H OR PTTR63H

Hubbell; HBL8300SG.

Leviton; 8300-SGG.

ENGINEER approved equal.

Description: Labeled to comply with NFPA 70, "Health Care Facilities" Article, "Pediatric Locations" Section.

GFCI RECEPTACLES

General Description: Straight blade, feed-through type. Comply with NEMA WD 1, NEMA WD 6, UL 498, and UL 943, Class A, and include indicator light that is lighted when device is tripped.

Duplex GFCI Convenience Receptacles, 125 V, 20 A:

Products: Subject to compliance with requirements, provide one of the following:

Pass & Seymour/Legrand; 2095 OR PT2095

ENGINEER approved equal.

Hospital-Grade, Duplex GFCI Convenience Receptacles, 125 V, 20 A: Comply with UL 498 Supplement SD.

Products: Subject to compliance with requirements, provide one of the following:

Pass & Seymour/Legrand; 2095-HG OR PT2095-HG

Hubbell; HGF8300.

Leviton; 6898-HG.

ENGINEER approved equal.

TVSS RECEPTACLES

General Description: Comply with NEMA WD 1, NEMA WD 6, UL 498, and UL 1449, with integral TVSS in line to ground, line to neutral, and neutral to ground.

TVSS Components: Multiple metal-oxide varistors; with a nominal clamp-level rating of 400 volts and minimum single transient pulse energy dissipation of 240 J, according to IEEE C62.41.2 and IEEE C62.45.

Active TVSS Indication: Visual and audible, with light visible in face of device to indicate device is "active" or "no longer in service."

Duplex TVSS Convenience Receptacles:

Products: Subject to compliance with requirements, provide one of the following:

Pass & Seymour/Legrand; 5362SP

Hubbell; HBL5362SA.

Leviton; 5380.

ENGINEER approved equal.

Description: Straight blade, 125 V, 20 A; NEMA WD 6 configuration 5-20R.

Isolated-Ground, Duplex Convenience Receptacles:

Available Products: Subject to compliance with requirements, products that may be incorporated into the Work include, but are not limited to, the following:

Products: Subject to compliance with requirements, provide one of the following:

Pass & Seymour/Legrand; IG5362SP

Hubbell; IG5362SA.

Leviton; 5380-IG.

ENGINEER approved equal.

Description: Straight blade, 125 V, 20 A; NEMA WD 6 configuration 5-20R. Equipment grounding contacts shall be connected only to the green grounding screw terminal of the device and with inherent electrical isolation from mounting strap. Isolation shall be integral to receptacle construction and not dependent on removable parts.

Hospital-Grade, Duplex Convenience Receptacles: Comply with UL 498 Supplement SD.

Products: Subject to compliance with requirements, provide one of the following:

Pass & Seymour/Legrand; 8300SP

Hubbell; HBL8362SA.

Leviton; 8380.

ENGINEER approved equal.

Description: Straight blade, 125 V, 20 A; NEMA WD 6 configuration 5-20R.

Isolated-Ground, Hospital-Grade, Duplex Convenience Receptacles:

22-413 Jefferson County Regional
Airport Main Terminal HVAC

Products: Subject to compliance with requirements, provide one of the following:

Pass & Seymour/Legrand

Hubbell; IG8362SA.

Leviton; 8380-IG.

ENGINEER approved equal.

Description: Straight blade, 125 V, 20 A; NEMA WD 6 configuration 5-20R. Comply with UL 498 Supplement SD. Equipment grounding contacts shall be connected only to the green grounding screw terminal of the device and with inherent electrical isolation from mounting strap. Isolation shall be integral to receptacle construction and not dependent on removable parts.

HAZARDOUS (CLASSIFIED) LOCATION RECEPTACLES

Wiring Devices for Hazardous (Classified) Locations: Comply with NEMA FB 11 and UL 1010.

Manufacturers: Subject to compliance with requirements, provide products by one of the following:

Cooper Crouse-Hinds.

EGS/Appleton Electric.

Killark; a division of Hubbell Inc.

TWIST-LOCKING RECEPTACLES

Single Convenience Receptacles, 125 V, 20 A: Comply with NEMA WD 1, NEMA WD 6 configuration L5-20R, and UL 498.

Products: Subject to compliance with requirements, provide one of the following:

Pass & Seymour/Legrand ; L520-R.

Hubbell; HBL2310.

Leviton; 2310.

ENGINEER approved equal.

Isolated-Ground, Single Convenience Receptacles, 125 V, 20 A:

Products: Subject to compliance with requirements, provide one of the following:

Hubbell; IG2310.

Leviton; 2310-IG.

Pass & Seymour/Legrand; IGL520R

ENGINEER approved equal.

Description: Comply with NEMA WD 1, NEMA WD 6 configuration L5-20R, and UL 498. Equipment grounding contacts shall be connected only to the green grounding screw terminal of the device and with inherent electrical isolation from mounting strap. Isolation shall be integral to receptacle construction and not dependent on removable parts.

PENDANT CORD-CONNECTOR DEVICES

Description: Matching, locking-type plug and receptacle body connector; NEMA WD 6 configurations L5-20P and L5-20R, heavy-duty grade.

Body: Nylon with screw-open cable-gripping jaws and provision for attaching external cable grip.

External Cable Grip: Woven wire-mesh type made of high-strength galvanized-steel wire strand, matched to cable diameter, and with attachment provision designed for corresponding connector.

CORD AND PLUG SETS

Description: Match voltage and current ratings and number of conductors to requirements of equipment being connected.

Cord: Rubber-insulated, stranded-copper conductors, with Type SOW-A jacket; with green-insulated grounding conductor and equipment-rating ampacity plus a minimum of 30 percent.

Plug: Nylon body and integral cable-clamping jaws. Match cord and receptacle type for connection.

SNAP SWITCHES

Comply with NEMA WD 1 and UL 20.

Switches, 120/277 V, 20 A:

Products: Subject to compliance with requirements, provide one of the following:

Pass & Seymour/Legrand; PS20AC1 (single pole), PS20AC2 (two pole), PS20AC3 (three way), PS20AC4 (four way).

Hubbell; HBL1221 (single pole), HBL1222 (two pole), HBL1223 (three way), HBL1224 (four way).

Leviton; 1221-2 (single pole), 1222-2 (two pole), 1223-2 (three way), 1224-2 (four way).

ENGINEER approved equal.

Pilot Light Switches, 20 A:

Products: Subject to compliance with requirements, provide one of the following:

Pass & Seymour/Legrand; PS20AC1-RPL for 120 V.

Hubbell; HPL1221PL for 120 V and 277 V.

Leviton; 1221-PLR for 120 V, 1221-7PLR for 277 V.

ENGINEER approved equal.

Description: Single pole, with neon-lighted handle, illuminated when switch is "ON."

Key-Operated Switches, 120/277 V, 20 A:

Products: Subject to compliance with requirements, provide one of the following:

Pass & Seymour/Legrand; PS20AC1-L.

Hubbell; HBL1221L.

Leviton; 1221-2L.

ENGINEER approved equal.

Description: Single pole, with factory-supplied key in lieu of switch handle.

Single-Pole, Double-Throw, Momentary Contact, Center-Off Switches, 120/277 V, 20 A; for use with mechanically held lighting contactors.

Products: Subject to compliance with requirements, provide one of the following:

Pass & Seymour/Legrand; 1251.

Hubbell; HBL1557.

Leviton; 1257.

ENGINEER approved equal.

Key-Operated, Single-Pole, Double-Throw, Momentary Contact, Center-Off Switches, 120/277 V, 20 A; for use with mechanically held lighting contactors, with factory-supplied key in lieu of switch handle.

Products: Subject to compliance with requirements, provide one of the following:

Pass & Seymour/Legrand; 1251L.

Hubbell; HBL1557L.

Leviton; 1257L.

ENGINEER approved equal.

WALL-BOX DIMMERS

Dimmer Switches: Modular, full-wave, solid-state units with integral, quiet on-off switches, with audible frequency and EMI/RFI suppression filters.

Control: Continuously adjustable slider; with single-pole or three-way switching. Comply with UL 1472.

Incandescent Lamp Dimmers: 120 V; control shall follow square-law dimming curve. On-off switch positions shall bypass dimmer module.

Fluorescent Lamp Dimmer Switches: Modular; compatible with dimmer ballasts; trim potentiometer to adjust low-end dimming; dimmer-ballast combination capable of consistent dimming with low end not greater than 20 percent of full brightness.

OCCUPANCY SENSORS

Wall-Switch Sensors:

Products: Subject to compliance with requirements, provide one of the following:

Pass & Seymour/Legrand; WSP200

Hubbell; WS1277.

Leviton; ODS 10-ID.

ENGINEER approved equal.

Description: Passive-infrared type, 120/277 V, adjustable time delay up to 30 minutes, 180-degree field of view, with a minimum coverage area of 900 sq. ft.

Wall-Switch Sensors:

Products: Subject to compliance with requirements, provide one of the following:

Hubbell; AT120 for 120 V, AT277 for 277 V.

Leviton; ODS 15-ID.

Pass & Seymour/Legrand; OS300S

ENGINEER approved equal.

Description: Adaptive-technology type, 120/277 V, adjustable time delay up to 20 minutes, 180-degree field of view, with a minimum coverage area of 900 sq. ft.

Long-Range Wall-Switch Sensors:

Products: Subject to compliance with requirements, provide one of the following:

Hubbell; ATP1600WRP.

Leviton; ODWWV-IRW.

Pass & Seymour; WA1001.

ENGINEER approved equal.

Description: Passive-infrared type, 120/277 V, adjustable time delay up to 30 minutes, 110-degree field of view, with a minimum coverage area of 1200 sq. ft.

Long-Range Wall-Switch Sensors:

Products: Subject to compliance with requirements, provide one of the following:

Hubbell; ATD1600WRP.

Leviton; ODW12-MRW.

Pass & Seymour/Legrand; CSD1000

ENGINEER approved equal.

Description: Dual technology, with both passive-infrared- and ultrasonic-type sensing, 120/277 V, adjustable time delay up to 30 minutes, 110-degree field of view, and a minimum coverage area of 1200 sq. ft.

Wide-Range Wall-Switch Sensors:

Products: Subject to compliance with requirements, provide one of the following:

Hubbell; ATP120HBRP.

Leviton; ODWHB-IRW.

Pass & Seymour; HS1001.

ENGINEER approved equal..

Description: Passive-infrared type, 120/277 V, adjustable time delay up to 30 minutes, 150-degree field of view, with a minimum coverage area of 1200 sq. ft.

Exterior Occupancy Sensors:

Products: Subject to compliance with requirements, provide one of the following:

Leviton; PS200-10.

Pass & Seymour/Legrand; WSP200

ENGINEER approved equal.

Description: Passive-infrared type, 120/277 V, weatherproof, adjustable time delay up to 15 minutes, 180-degree field of view, and 110-foot detection range. Minimum switch rating: 1000-W incandescent, 500-VA fluorescent.

COMMUNICATIONS OUTLETS

Telephone Outlet:

Products: Subject to compliance with requirements, provide one of the following:

Leviton; 40649.

Pass & Seymour/Legrand; 26TE16

ENGINEER approved equal.

Description: Single RJ-45 jack for terminating 100-ohm, balanced, four-pair UTP; TIA/EIA-568-B.1; complying with Category 5e. Comply with UL 1863.

Combination TV and Telephone Outlet:

Products: Subject to compliance with requirements, provide one of the following:

Leviton; 40595.

Pass & Seymour/Legrand; C25E2F

ENGINEER approved equal.

Description: Single RJ-45 jack for 100-ohm, balanced, four-pair UTP; TIA/EIA-568-B.1; complying with Category 5e; and one Type F coaxial cable connector.

WALL PLATES

Single and combination types to match corresponding wiring devices.

Plate-Securing Screws: Metal with head color to match plate finish.

Material: Smooth, high-impact thermoplastic.

Wet-Location, Weatherproof Cover Plates: NEMA 250, complying with type 3R weather-resistant thermoplastic with lockable cover.

Verify type of cover plates with facilities directors.

FLOOR SERVICE FITTINGS

Type: Modular, flush-type, dual-service units suitable for wiring method used.

Compartments: Barrier separates power from voice and data communication cabling.

Service Plate: Rectangular, solid brass with satin finish.

Power Receptacle: NEMA WD 6 configuration 5-20R, gray finish, unless otherwise indicated.

Voice and Data Communication Outlet: Blank cover with bushed cable opening.

POKE-THROUGH ASSEMBLIES

Available Manufacturers: Subject to compliance with requirements, manufacturers offering products that may be incorporated into the Work include, but are not limited to, the following:

Manufacturers: Subject to compliance with requirements, provide products by one of the following:

Hubbell Incorporated; Wiring Device-Kellems.

Pass & Seymour/Legrand; Wiring Devices & Accessories.

Square D/ Schneider Electric.

Thomas & Betts Corporation.
Wiremold Company (The).

Description: Factory-fabricated and -wired assembly of below-floor junction box with multi-channeled, through-floor raceway/fire-stop unit and detachable matching floor service outlet assembly.

Service Outlet Assembly: Pedestal type with services indicated.
Size: Selected to fit nominal 3-inch cored holes in floor and matched to floor thickness.
Fire Rating: Unit is listed and labeled for fire rating of floor-ceiling assembly.
Closure Plug: Arranged to close unused 3-inch cored openings and reestablish fire rating of floor.
Wiring Raceways and Compartments: For a minimum of four No. 12 AWG conductors and a minimum of four, 4-pair, Category 5e voice and data communication cables.

MULTIOUTLET ASSEMBLIES

Manufacturers: Subject to compliance with requirements, provide products by one of the following:

Hubbell Incorporated; Wiring Device-Kellems.
Wiremold Company (The).

Components of Assemblies: Products from a single manufacturer designed for use as a complete, matching assembly of raceways and receptacles.

Raceway Material: Metal, with manufacturer's standard finish.

Wire: No. 12 AWG.

SERVICE POLES

Description: Factory-assembled and -wired units to extend power and voice and data communication from distribution wiring concealed in ceiling to devices or outlets in pole near floor.

Poles: Nominal 2.5-inch square cross section, with height adequate to extend from floor to at least 6 inches above ceiling, and with separate channels for power wiring and voice and data communication cabling.
Mounting: Ceiling trim flange with concealed bracing arranged for positive connection to ceiling supports; with pole foot and carpet pad attachment.
Finishes: Manufacturer's standard painted finish and trim combination.
Wiring: Sized for minimum of five No. 12 AWG power and ground conductors and a minimum of four, 4-pair, Category 3 or 5 voice and data communication cables.
Power Receptacles: Two duplex, 20-A, heavy-duty, NEMA WD 6 configuration 5-20R units.
Voice and Data Communication Outlets: Blank insert with bushed cable opening.

FINISHES

Color: Wiring device catalog numbers in Section Text do not designate device color.

Wiring Devices Connected to Normal Power System: Ivory, or as selected by Architect unless otherwise indicated or required by NFPA 70 or device listing.
Wiring Devices Connected to Emergency Power System: Red.

TVSS Devices: Blue.
Isolated-Ground Receptacles: Orange.

PART 3 - EXECUTION

INSTALLATION

Comply with NECA 1, including the mounting heights listed in that standard, unless otherwise noted.

Coordination with Other Trades:

Take steps to insure that devices and their boxes are protected. Do not place wall finish materials over device boxes and do not cut holes for boxes with routers that are guided by riding against outside of the boxes.

Keep outlet boxes free of plaster, drywall joint compound, mortar, cement, concrete, dust, paint, and other material that may contaminate the raceway system, conductors, and cables.

Install device boxes in brick or block walls so that the cover plate does not cross a joint unless the joint is troweled flush with the face of the wall.

Install wiring devices after all wall preparation, including painting, is complete.

Conductors:

Do not strip insulation from conductors until just before they are spliced or terminated on devices.

Strip insulation evenly around the conductor using tools designed for the purpose.

Avoid scoring or nicking of solid wire or cutting strands from stranded wire.

The length of free conductors at outlets for devices shall meet provisions of NFPA 70, Article 300, without pigtails.

Existing Conductors:

Cut back and pigtail, or replace all damaged conductors.

Straighten conductors that remain and remove corrosion and foreign matter.

Pigtailing existing conductors is permitted provided the outlet box is large enough.

Device Installation:

Replace all devices that have been in temporary use during construction or that show signs that they were installed before building finishing operations were complete.

Keep each wiring device in its package or otherwise protected until it is time to connect conductors.

Do not remove surface protection, such as plastic film and smudge covers, until the last possible moment.

Connect devices to branch circuits using pigtails that are not less than 6 inches in length.

When there is a choice, use side wiring with binding-head screw terminals. Wrap solid conductor tightly clockwise, 2/3 to 3/4 of the way around terminal screw.

Use a torque screwdriver when a torque is recommended or required by the manufacturer.

When conductors larger than No. 12 AWG are installed on 15- or 20-A circuits, splice No. 12 AWG pigtails for device connections.

Tighten unused terminal screws on the device.
When mounting into metal boxes, remove the fiber or plastic washers used to hold device mounting screws in yokes, allowing metal-to-metal contact.
Any exterior disconnects or boxes shall be rated NEMA 3R, or better, and mounted at least 18" above the ground.
Receptacles mounted above counter tops shall be installed above back splashes – not in the back splash.

Receptacle Orientation:
Install ground pin of vertically mounted receptacles down, and on horizontally mounted receptacles to the right.
Install hospital-grade receptacles in patient-care areas with the ground pin or neutral blade at the top.

Device Plates: Do not use oversized or extra-deep plates. Repair wall finishes and remount outlet boxes when standard device plates do not fit flush or do not cover rough wall opening.

Dimmers:
Install dimmers within terms of their listing.
Verify that dimmers used for fan speed control are listed for that application.
Install unshared neutral conductors on line and load side of dimmers according to manufacturers' device listing conditions in the written instructions.

Arrangement of Devices: Unless otherwise indicated, mount flush, with long dimension vertical and with grounding terminal of receptacles on top. Group adjacent switches under single, multi-gang wall plates.

Adjust locations of floor service outlets and service poles to suit arrangement of partitions and furnishings.

IDENTIFICATION

Comply with Division 26 Section "Identification for Electrical Systems."
All receptacles and light switches shall be permanently labeled with panel and circuit number on outside of cover plate.
Receptacles: Identify panelboard and circuit number from which served. Use hot, stamped or engraved machine printing with black-filled lettering on face of plate, and durable wire markers or tags inside outlet boxes.

FIELD QUALITY CONTROL

Perform tests and inspections and prepare test reports.
In healthcare facilities, prepare reports that comply with recommendations in NFPA 99.
Test Instruments: Use instruments that comply with UL 1436.
Test Instrument for Convenience Receptacles: Digital wiring analyzer with digital readout or illuminated LED indicators of measurement.

Tests for Convenience Receptacles:
Line Voltage: Acceptable range is 105 to 132 V.
Percent Voltage Drop under 15-A Load: A value of 6 percent or higher is not acceptable.
Ground Impedance: Values of up to 2 ohms are acceptable.

22-413 Jefferson County Regional
Airport Main Terminal HVAC

GFCI Trip: Test for tripping values specified in UL 1436 and UL 943.
Using the test plug, verify that the device and its outlet box are securely mounted. The tests shall be diagnostic, indicating damaged conductors, high resistance at the circuit breaker, poor connections, inadequate fault current path, defective devices, or similar problems. Correct circuit conditions, remove malfunctioning units and replace with new ones, and retest as specified above.

END OF SECTION

SECTION 26 28 13 FUSES

PART 1 - GENERAL

RELATED DOCUMENTS

Drawings and general provisions of the Contract, including General and Supplementary Conditions and Division 01 Specification Sections, apply to this Section.

SUMMARY

Section Includes:

Cartridge fuses rated 600-V ac and less for use in control circuits, enclosed switches, panelboards, switchboards, enclosed controllers, and motor-control centers.

Plug fuses rated 125-V ac and less for use in plug-fuse-type enclosed switches, fuse-holders, and panelboards.

Plug-fuse adapters for use in Edison-base, plug-fuse sockets.

Spare-fuse cabinets.

SUBMITTALS

Product Data: For each type of product indicated. Include construction details, material, dimensions, descriptions of individual components, and finishes for spare-fuse cabinets. Include the following for each fuse type indicated:

Ambient Temperature Adjustment Information: If ratings of fuses have been adjusted to accommodate ambient temperatures, provide list of fuses with adjusted ratings.

For each fuse having adjusted ratings, include location of fuse, original fuse rating, local ambient temperature, and adjusted fuse rating.

Provide manufacturer's technical data on which ambient temperature adjustment calculations are based.

Dimensions and manufacturer's technical data on features, performance, electrical characteristics, and ratings.

Current-limitation curves for fuses with current-limiting characteristics.

Time-current coordination curves (average melt) and current-limitation curves (instantaneous peak let-through current) for each type and rating of fuse.

Coordination charts and tables and related data.

Fuse sizes for elevator feeders and elevator disconnect switches.

Operation and Maintenance Data: For fuses to include in emergency, operation, and maintenance manuals. In addition to items specified in Division 01 Section "Operation and Maintenance Data," include the following:

Ambient temperature adjustment information.

Current-limitation curves for fuses with current-limiting characteristics.

Time-current coordination curves (average melt) and current-limitation curves (instantaneous peak let-through current) for each type and rating of fuse.

Coordination charts and tables and related data.

QUALITY ASSURANCE

Source Limitations: Obtain fuses, for use within a specific product or circuit, from single source from single manufacturer.

Electrical Components, Devices, and Accessories: Listed and labeled as defined in NFPA 70, by a qualified testing agency, and marked for intended location and application.

Comply with NEMA FU 1 for cartridge fuses.

Comply with NFPA 70.

Comply with UL 248-11 for plug fuses.

COORDINATION

Coordinate fuse ratings with utilization equipment nameplate limitations of maximum fuse size and with system short-circuit current levels.

EXTRA MATERIALS

Furnish extra materials that match products installed and that are packaged with protective covering for storage and identified with labels describing contents.

PART 2 - PRODUCTS

MANUFACTURERS

Manufacturers: Subject to compliance with requirements, provide products by one of the following:
Cooper Bussmann, Inc.
Littelfuse, Inc.

CARTRIDGE FUSES

Characteristics: NEMA FU 1, nonrenewable cartridge fuses with voltage ratings consistent with circuit voltages.

PLUG FUSES

Characteristics: UL 248-11, nonrenewable plug fuses; 125-V ac.

PLUG-FUSE ADAPTERS

Characteristics: Adapters for using Type S, rejection-base plug fuses in Edison-base fuse-holders or sockets; ampere ratings matching fuse ratings; irremovable once installed.

SPARE-FUSE CABINET

PART 3 - EXECUTION

EXAMINATION

Examine fuses before installation. Reject fuses that are moisture damaged or physically damaged.

Examine holders to receive fuses for compliance with installation tolerances and other conditions affecting performance, such as rejection features.

Examine utilization equipment nameplates and installation instructions. Install fuses of sizes and with characteristics appropriate for each piece of equipment.

Evaluate ambient temperatures to determine if fuse rating adjustment factors must be applied to fuse ratings.

Proceed with installation only after unsatisfactory conditions have been corrected.

FUSE APPLICATIONS

Cartridge Fuses:
- Service Entrance: Class L, fast acting.
- Feeders: Class L, fast acting
- Motor Branch Circuits: Class RK1 and Class RK5, time delay.
- Other Branch Circuits: Class J, fast acting.
- Control Circuits: Class CC, fast acting.

INSTALLATION

Install fuses in fusible devices. Arrange fuses so rating information is readable without removing fuse.

Install plug-fuse adapters in Edison-base fuse-holders and sockets. Ensure that adapters are irremovable once installed.

Install spare-fuse cabinet(s).

IDENTIFICATION

Install labels complying with requirements for identification specified in Division 26 Section "Identification for Electrical Systems" and indicating fuse replacement information on inside door of each fused switch and adjacent to each fuse block, socket, and holder.

END OF SECTION

THIS PAGE INTENTIONALLY LEFT BLANK

SECTION 26 28 16 - ENCLOSED SWITCHES AND CIRCUIT BREAKERS

PART 1 - GENERAL

RELATED DOCUMENTS

Drawings and general provisions of the Contract, including General and Supplementary Conditions and other Division 01 Specification Sections, apply to this Section.

SUMMARY

Section Includes:
- Fusible switches.
- Non-fusible switches.
- Receptacle switches.
- Shunt trip switches.
- Molded-case circuit breakers.
- Enclosures.

DEFINITIONS

NC: Normally closed.

NO: Normally open.

SPDT: Single pole, double throw.

SUBMITTALS

Product Data: For each type of enclosed switch, circuit breaker, accessory, and component indicated. Include dimensioned elevations, sections, weights, and manufacturers' technical data on features, performance, electrical characteristics, ratings, accessories, and finishes.
- Enclosure types and details for types other than NEMA 250, Type 1.
- Current and voltage ratings.
- Short-circuit current ratings (interrupting and withstand, as appropriate).
- Detail features, characteristics, ratings, and factory settings of individual over-current protective devices, accessories, and auxiliary components.
- Include time-current coordination curves (average melt) for each type and rating of over-current protective device; include selectable ranges for each type of over-current protective device.

Shop Drawings: For enclosed switches and circuit breakers. Include plans, elevations, sections, details, and attachments to other work.
- Wiring Diagrams: For power, signal, and control wiring.

Qualification Data: For qualified testing agency.

Seismic Qualification Certificates: For enclosed switches and circuit breakers, accessories, and components, from manufacturer.
- Basis for Certification: Indicate whether withstand certification is based on actual test of assembled components or on calculation.

Dimensioned Outline Drawings of Equipment Unit: Identify center of gravity and locate and describe mounting and anchorage provisions.
Detailed description of equipment anchorage devices on which the certification is based and their installation requirements.

Field quality-control reports.
Test procedures used.
Test results that comply with requirements.
Results of failed tests and corrective action taken to achieve test results that comply with requirements.

Manufacturer's field service report.

Operation and Maintenance Data: For enclosed switches and circuit breakers to include in emergency, operation, and maintenance manuals. In addition to items specified in Division 01 Section "Operation and Maintenance Data," include the following:
Manufacturer's written instructions for testing and adjusting enclosed switches and circuit breakers.
Time-current coordination curves (average melt) for each type and rating of over-current protective device; include selectable ranges for each type of over-current protective device.

QUALITY ASSURANCE

Source Limitations: Obtain enclosed switches and circuit breakers, over-current protective devices, components, and accessories, within same product category, from single source from single manufacturer.

Product Selection for Restricted Space: Drawings indicate maximum dimensions for enclosed switches and circuit breakers, including clearances between enclosures, and adjacent surfaces and other items. Comply with indicated maximum dimensions.

Electrical Components, Devices, and Accessories: Listed and labeled as defined in NFPA 70, by a qualified testing agency, and marked for intended location and application.

Comply with NFPA 70.

COORDINATION

Coordinate layout and installation of switches, circuit breakers, and components with equipment served and adjacent surfaces. Maintain required workspace clearances and required clearances for equipment access doors and panels.

EXTRA MATERIALS

Furnish extra materials that match products installed and that are packaged with protective covering for storage and identified with labels describing contents.
Fuses: Equal to 10 percent of quantity installed for each size and type, but no fewer than three of each size and type.
Fuse Pullers: Two for each size and type.

PART 2 - PRODUCTS

FUSIBLE SWITCHES

Manufacturers: Subject to compliance with requirements, provide products by one of the following:
- Square D.
- Eaton
- GE
- Siemens

Type HD, Heavy Duty, Six Pole, Single Throw, 600-V ac, 200 A and Smaller: UL 98 and NEMA KS 1, horsepower rated, with clips or bolt pads to accommodate indicated fuses, lockable handle with capability to accept three padlocks, and interlocked with cover in closed position.

Type HD, Heavy Duty, Double Throw, 600-V ac, 1200 A and Smaller: UL 98 and NEMA KS 1, horsepower rated, with clips or bolt pads to accommodate indicated fuses, lockable handle with capability to accept three padlocks, and interlocked with cover in closed position.

Accessories:
- Equipment Ground Kit: Internally mounted and labeled for copper and aluminum ground conductors.
- Neutral Kit: Internally mounted; insulated, capable of being grounded and bonded; labeled for copper and aluminum neutral conductors.
- Isolated Ground Kit: Internally mounted; insulated, capable of being grounded and bonded; labeled for copper and aluminum neutral conductors.
- Class R Fuse Kit: Provides rejection of other fuse types when Class R fuses are specified.
- Auxiliary Contact Kit: Two NO/NC (Form "C") auxiliary contact(s), arranged to activate before switch blades open.
- Hook stick Handle: Allows use of a hook stick to operate the handle.
- Lugs: Mechanical type, suitable for number, size, and conductor material.
- Service-Rated Switches: Labeled for use as service equipment.
- Accessory Control Power Voltage: Remote mounted and powered; 120-V ac.

NONFUSIBLE SWITCHES

Manufacturers: Subject to compliance with requirements, provide products by one of the following:
- Square D.
- Eaton
- GE
- Siemens

Type HD, Heavy Duty, Single Throw, 240, 600-V ac, 1200 A and Smaller: UL 98 and NEMA KS 1, horsepower rated, lockable handle with capability to accept three padlocks, and interlocked with cover in closed position.

Type HD, Heavy Duty, Six Pole, Single Throw, 240, 600-V ac, 200 A and Smaller: UL 98 and NEMA KS 1, horsepower rated, lockable handle with capability to accept three padlocks, and interlocked with cover in closed position.

Type HD, Heavy Duty, Double Throw, 240, 600-V ac, 1200 A and Smaller: UL 98 and NEMA KS 1, horsepower rated, lockable handle with capability to accept three padlocks, and interlocked with cover in closed position.

Accessories:

Equipment Ground Kit: Internally mounted and labeled for copper and aluminum ground conductors.
Neutral Kit: Internally mounted; insulated, capable of being grounded and bonded; labeled for copper and aluminum neutral conductors.
Isolated Ground Kit: Internally mounted; insulated, capable of being grounded and bonded; labeled for copper and aluminum neutral conductors.
Auxiliary Contact Kit: Two NO/NC (Form "C") auxiliary contact(s), arranged to activate before switch blades open.
Hook-stick Handle: Allows use of a hook-stick to operate the handle.
Lugs: Mechanical type, suitable for number, size, and conductor material.
Accessory Control Power Voltage: Remote mounted and powered; 120-V ac.

MOLDED-CASE CIRCUIT BREAKERS

Manufacturers: Subject to compliance with requirements, provide products by one of the following:

Square D.
Eaton
GE
Siemens

General Requirements: Comply with UL 489, NEMA AB 1, and NEMA AB 3, with interrupting capacity to comply with available fault currents.

Thermal-Magnetic Circuit Breakers: Inverse time-current element for low-level overloads and instantaneous magnetic trip element for short circuits. Adjustable magnetic trip setting for circuit-breaker frame sizes 250 A and larger.

Adjustable, Instantaneous-Trip Circuit Breakers: Magnetic trip element with front-mounted, field-adjustable trip setting.

Electronic Trip Circuit Breakers: Field-replaceable rating plug, rms sensing, with the following field-adjustable settings:

Instantaneous trip.
Long- and short-time pickup levels.
Long- and short-time time adjustments.
Ground-fault pickup level, time delay, and I^2t response.

Current-Limiting Circuit Breakers: Frame sizes 400 A and smaller, and let-through ratings less than NEMA FU 1, RK-5.

Integrally Fused Circuit Breakers: Thermal-magnetic trip element with integral limiter-style fuse listed for use with circuit breaker and trip activation on fuse opening or on opening of fuse compartment door.

Ground-Fault, Circuit-Interrupter (GFCI) Circuit Breakers: Single- and two-pole configurations with Class A ground-fault protection (6-mA trip).

Ground-Fault, Equipment-Protection (GFEP) Circuit Breakers: With Class B ground-fault protection (30-mA trip).

22-413 Jefferson County Regional
Airport Main Terminal HVAC

Features and Accessories:

Standard frame sizes, trip ratings, and number of poles.

Lugs: Mechanical type, suitable for number, size, trip ratings, and conductor material.

Application Listing: Appropriate for application; Type SWD for switching fluorescent lighting loads; Type HID for feeding fluorescent and high-intensity discharge lighting circuits.

Ground-Fault Protection: Comply with UL 1053; integrally mounted, self-powered type with mechanical ground-fault indicator; relay with adjustable pickup and time-delay settings, push-to-test feature, internal memory, and shunt trip unit; and three-phase, zero-sequence current transformer/sensor.

Communication Capability: Integral communication module with functions and features compatible with power monitoring and control system, specified in Division 26 Section "Electrical Power Monitoring and Control."

Shunt Trip: Trip coil energized from separate circuit, with coil-clearing contact.

Under-voltage Trip: Set to operate at 35 to 75 percent of rated voltage without intentional time delay.

Auxiliary Contacts: Two SPDT switches with "a" and "b" contacts; "a" contacts mimic circuit-breaker contacts, "b" contacts operate in reverse of circuit-breaker contacts.

Key Interlock Kit: Externally mounted to prohibit circuit-breaker operation; key shall be removable only when circuit breaker is in off position.

Electrical Operator: Provide remote control for on, off, and reset operations.

ENCLOSURES

Enclosed Switches and Circuit Breakers: NEMA AB 1, NEMA KS 1, NEMA 250, and UL 50, to comply with environmental conditions at installed location.

Indoor, Dry and Clean Locations: NEMA 250, Type 1.

Outdoor Locations: NEMA 250, Type 3R.

Kitchen and Wash-Down Areas: NEMA 250, Type 4X, stainless steel.

Other Wet or Damp, Indoor Locations: NEMA 250, Type 4-SS.

Indoor Locations Subject to Dust, Falling Dirt, and Dripping Non-corrosive Liquids: NEMA 250, Type 12.

Hazardous Areas Indicated on Drawings: NEMA 250, Type 7.

PART 3 - EXECUTION

EXAMINATION

Examine elements and surfaces to receive enclosed switches and circuit breakers for compliance with installation tolerances and other conditions affecting performance of the Work.

Proceed with installation only after unsatisfactory conditions have been corrected.

INSTALLATION

Install individual wall-mounted switches and circuit breakers with tops at uniform height unless otherwise indicated.

Comply with mounting and anchoring requirements specified in Division 26 Section "Vibration and Seismic Controls for Electrical Systems."

Temporary Lifting Provisions: Remove temporary lifting eyes, channels, and brackets and temporary blocking of moving parts from enclosures and components.

Install fuses in fusible devices.

Comply with NECA 1.

IDENTIFICATION

Comply with requirements in Division 26 Section "Identification for Electrical Systems."

Identify field-installed conductors, interconnecting wiring, and components; provide warning signs.

Label each enclosure with engraved metal or laminated-plastic nameplate.

FIELD QUALITY CONTROL

Perform tests and inspections.

Manufacturer's Field Service: Engage a factory-authorized service representative to inspect components, assemblies, and equipment installations, including connections, and to assist in testing.

Acceptance Testing Preparation:

Test insulation resistance for each enclosed switch and circuit breaker, component, connecting supply, feeder, and control circuit.

Test continuity of each circuit.

Tests and Inspections:

Perform each visual and mechanical inspection and electrical test stated in NETA Acceptance Testing Specification. Certify compliance with test parameters.

Correct malfunctioning units on-site, where possible, and retest to demonstrate compliance; otherwise, replace with new units and retest.

Perform the following infrared scan tests and inspections and prepare reports:

Initial Infrared Scanning: After Substantial Completion, but not more than 60 days after Final Acceptance, perform an infrared scan of each enclosed switch and circuit breaker. Remove front panels so joints and connections are accessible to portable scanner.

Follow-up Infrared Scanning: Perform an additional follow-up infrared scan of each enclosed switch and circuit breaker 11 months after date of Substantial Completion.

Instruments and Equipment: Use an infrared scanning device designed to measure temperature or to detect significant deviations from normal values. Provide calibration record for device.

Test and adjust controls, remote monitoring, and safeties. Replace damaged and malfunctioning controls and equipment.

Enclosed switches and circuit breakers will be considered defective if they do not pass tests and inspections.

Prepare test and inspection report, including a certified report that identifies enclosed switches and circuit breakers and that describes scanning results. Include notation of deficiencies detected, remedial action taken and observations after remedial action.

ADJUSTING

Adjust moving parts and operable components to function smoothly, and lubricate as recommended by manufacturer.

END OF SECTION

THIS PAGE INTENTIONALLY LEFT BLANK.

SECTION 26 29 13 ENCLOSED CONTROLLERS

PART 1 - GENERAL

RELATED DOCUMENTS

Drawings and general provisions of the Contract, including General and Supplementary Conditions and Division 01 Specification Sections, apply to this Section.

SUMMARY

Section includes the following enclosed controllers rated 600V and less:
- Full-voltage manual.
- Full-voltage magnetic.
- Reduced-voltage magnetic.
- Reduced-voltage solid state.
- Multi-speed.

Related Section:
- Division 26 Section "Variable-Frequency Motor Controllers" for general-purpose, ac, adjustable-frequency, pulse-width-modulated controllers for use on variable torque loads in ranges up to 200HP.

DEFINITIONS

CPT: Control power transformer.

MCCB: Molded-case circuit breaker.

MCP: Motor circuit protector.

N.C.: Normally closed.

N.O.: Normally open.

OCPD: Overcurrent protective device.

SCR: Silicon-controlled rectifier.

SUBMITTALS

Product Data: For each type of enclosed controller. Include manufacturer's technical data on features, performance, electrical characteristics, ratings, and enclosure types and finishes.

Shop Drawings: For each enclosed controller. Include dimensioned plans, elevations, sections, details, and required clearances and service spaces around controller enclosures.

Show tabulations of the following:
- Each installed unit's type and details.
- Factory-installed devices.
- Nameplate legends.

Short-circuit current rating of integrated unit.

Listed and labeled for integrated short-circuit current (withstand) rating of OCPDs in combination controllers by an NRTL acceptable to authorities having jurisdiction.

Features, characteristics, ratings, and factory settings of individual OCPDs in combination controllers.

Wiring Diagrams: For power, signal, and control wiring.

Qualification Data: For qualified testing agency.

Seismic Qualification Certificates: For enclosed controllers, accessories, and components, from manufacturer.

Basis for Certification: Indicate whether withstand certification is based on actual test of assembled components or on calculation.

Dimensioned Outline Drawings of Equipment Unit: Identify center of gravity and locate and describe mounting and anchorage provisions.

Detailed description of equipment anchorage devices on which the certification is based and their installation requirements. Retain first paragraph below if Contractor is responsible for field quality-control testing and inspecting.

Field quality-control reports.

Operation and Maintenance Data: For enclosed controllers to include in emergency, operation, and maintenance manuals. In addition to items specified in Division 01 Section "Operation and Maintenance Data," include the following:

Routine maintenance requirements for enclosed controllers and installed components.

Manufacturer's written instructions for testing and adjusting circuit breaker and MCP trip settings.

Manufacturer's written instructions for setting field-adjustable overload relays.

Manufacturer's written instructions for testing, adjusting, and reprogramming reduced-voltage solid-state controllers.

Load-Current and Overload-Relay Heater List: Compile after motors have been installed, and arrange to demonstrate that selection of heaters suits actual motor nameplate full-load currents.

Load-Current and List of Settings of Adjustable Overload Relays: Compile after motors have been installed and arrange to demonstrate that switch settings for motor running overload protection suit actual motors to be protected.

QUALITY ASSURANCE

Testing Agency Qualifications: Member company of NETA or an NRTL.

Testing Agency's Field Supervisor: Currently certified by NETA to supervise on-site testing.

Electrical Components, Devices, and Accessories: Listed and labeled as defined in NFPA 70, by a qualified testing agency, and marked for intended location and application.

Comply with NFPA 70.

IEEE Compliance: Fabricate and test enclosed controllers according to IEEE 344 to withstand seismic forces defined in Division 26 Section "Vibration and Seismic Controls for Electrical Systems."

DELIVERY, STORAGE, AND HANDLING

Store enclosed controllers indoors in clean, dry space with uniform temperature to prevent condensation. Protect enclosed controllers from exposure to dirt, fumes, water, corrosive substances, and physical damage.

If stored in areas subject to weather, cover enclosed controllers to protect them from weather, dirt, dust, corrosive substances, and physical damage. Remove loose packing and flammable materials from inside controllers.

PROJECT CONDITIONS

Interruption of Existing Electrical Systems: Do not interrupt electrical systems in facilities occupied by Owner or others unless permitted under the following conditions and then only after arranging to provide temporary electrical service according to requirements indicated:

Notify Owner no fewer than 10 days in advance of proposed interruption of electrical systems.
Indicate method of providing temporary utilities.
Do not proceed with interruption of electrical systems without Owner's written permission.
Comply with NFPA 70E.

COORDINATION

Coordinate layout and installation of enclosed controllers with other construction including conduit, piping, equipment, and adjacent surfaces. Maintain required workspace clearances and required clearances for equipment access doors and panels.

Coordinate sizes and locations of concrete bases with actual equipment provided. Cast anchor-bolt inserts into bases. Concrete, reinforcement, and formwork requirements are specified in Division 03.

Coordinate installation of roof curbs, equipment supports, and roof penetrations.

EXTRA MATERIALS

Furnish extra materials that match products installed and that are packaged with protective covering for storage and identified with labels describing contents.

Fuses for Fused Switches: Equal to 10 percent of quantity installed for each size and type, but no fewer than 3 of each size and type.
Control Power Fuses: Equal to 10 percent of quantity installed for each size and type, but no fewer than 2 of each size and type.
Indicating Lights: 2 of each type and color installed.
Auxiliary Contacts: Furnish 1 spare(s) for each size and type of magnetic controller installed.
Power Contacts: Furnish 3 spares for each size and type of magnetic contactor installed.

PART 2 - PRODUCTS

FULL-VOLTAGE CONTROLLERS

General Requirements for Full-Voltage Controllers: Comply with NEMA ICS 2, general purpose, Class A.

Motor-Starting Switches: "Quick-make, quick-break" toggle or push-button action; marked to show whether unit is off or on.

Manufacturers: Subject to compliance with requirements, provide products by one of the following:

Square D.

GE.

Eaton.

Siemens.

Configuration: Non-Reversing.
Surface mounting.
Red pilot light.

Fractional Horsepower Manual Controllers: "Quick-make, quick-break" toggle or push-button action; marked to show whether unit is off, on, or tripped.

Manufacturers: Subject to compliance with requirements, provide products by one of the following

Square D.

GE.

Eaton.

Siemens.

Configuration: Non-reversing.
Overload Relays: Inverse-time-current characteristics; NEMA ICS 2, Class 10 tripping characteristics; heaters matched to nameplate full-load current of actual protected motor; external reset push button.
Surface mounting.
Red pilot light.

Magnetic Controllers: Full voltage, across the line, electrically held.

Manufacturers: Subject to compliance with requirements, provide products by one of the following:

Square D.

GE.

Eaton.

Siemens.

Configuration: Non-reversing.
Power Contacts: Totally enclosed, double-break, silver-cadmium oxide; assembled to allow inspection and replacement without disturbing line or load wiring.

Control Circuits: 120 V ac; obtained from integral CPT, with primary and secondary fuses and sufficient capacity to operate integral devices and remotely located pilot, indicating, and control devices.

Solid-State Overload Relay:

Switch or dial selectable for motor running overload protection.

Sensors in each phase.

Class 10/20 selectable tripping characteristic selected to protect motor against voltage and current unbalance and single phasing.

Class II ground-fault protection, with start and run delays to prevent nuisance trip on starting.

Analog communication module.

Retain first subparagraph below if alarm contacts on overload relays are required for local or remote alarm indication of a tripped overload relay.

External overload reset push button.

Combination Magnetic Controller: Factory-assembled combination of magnetic controller, OCPD, and disconnecting means.

Manufacturers: Subject to compliance with requirements, provide products by one of the following

Square D.

GE.

Eaton.

Siemens.

MCP Disconnecting Means:

UL 489, NEMA AB 1, and NEMA AB 3, with interrupting capacity to comply with available fault currents, instantaneous-only circuit breaker with front-mounted, field-adjustable, short-circuit trip coordinated with motor locked-rotor amperes.

Lockable Handle: Accepts three padlocks and interlocks with cover in closed position.

Auxiliary contacts "a" and "b" arranged to activate with MCP handle.

N.C. alarm contact that operates only when MCP has tripped.

Current-limiting module to increase controller short-circuit current (withstand) rating to 100 kA.

MCCB Disconnecting Means:

UL 489, NEMA AB 1, and NEMA AB 3, with interrupting capacity to comply with available fault currents; thermal-magnetic MCCB, with inverse time-current element for low-level overloads and instantaneous magnetic trip element for short circuits.

Front-mounted, adjustable magnetic trip setting for circuit-breaker frame sizes 250 A and larger.

Lockable Handle: Accepts three padlocks and interlocks with cover in closed position.

Auxiliary contacts "a" and "b" arranged to activate with MCCB handle.

N.C. alarm contact that operates only when MCCB has tripped.

ENCLOSURES

Enclosed Controllers: NEMA ICS 6, to comply with environmental conditions at installed location.

Dry and Clean Indoor Locations: Type 1.
Outdoor Locations: Type 3R.
Kitchen and Wash-Down Areas: Type 4X, stainless steel.
Other Wet or Damp Indoor Locations: Type 4X-ss.
Indoor Locations Subject to Dust, Falling Dirt, and Dripping Non-corrosive Liquids: Type 12.
Hazardous Areas Indicated on Drawings: Type 9.

ACCESSORIES

General Requirements for Control Circuit and Pilot Devices: NEMA ICS 5; factory installed in controller enclosure cover unless otherwise indicated.

Push Buttons, Pilot Lights, and Selector Switches: Heavy duty, oil-tight type.

N.C., N.O. auxiliary contact(s).

Control Relays: Auxiliary and adjustable solid-state time-delay relays.

Phase-Failure, Phase-Reversal, and Under-voltage and Over-voltage Relays: Solid-state sensing circuit with isolated output contacts for hard-wired connections. Provide adjustable under-voltage, over-voltage, and time-delay settings.

Breather and drain assemblies, to maintain interior pressure and release condensation in Type 4X enclosures installed outdoors or in unconditioned interior spaces subject to humidity and temperature swings.

Space heaters, with N.C. auxiliary contacts, to mitigate condensation in Type 3R enclosures installed outdoors or in unconditioned interior spaces subject to humidity and temperature swings.

Sun shields installed on fronts, sides, and tops of enclosures installed outdoors and subject to direct and extended sun exposure.

Cover gaskets for Type 1 enclosures.

Terminals for connecting power factor correction capacitors to the load side of overload relays.

Spare control wiring terminal blocks, quantity as indicated; unwired.

PART 3 - EXECUTION

EXAMINATION

Examine areas and surfaces to receive enclosed controllers, with Installer present, for compliance with requirements and other conditions affecting performance of the Work.

Examine enclosed controllers before installation. Reject enclosed controllers that are wet, moisture damaged, or mold damaged.

Proceed with installation only after unsatisfactory conditions have been corrected.

INSTALLATION

Wall-Mounted Controllers: Install enclosed controllers on walls with tops at uniform height unless otherwise indicated, and by bolting units to wall or mounting on lightweight structural-steel channels bolted to wall. For controllers not at walls, provide freestanding racks complying with Division 26 Section "Hangers and Supports for Electrical Systems."

Floor-Mounted Controllers: Install enclosed controllers on 4-inch nominal-thickness concrete base. Comply with requirements for concrete base specified in Division 03 Section.

Install dowel rods to connect concrete base to concrete floor. Unless otherwise indicated, install dowel rods on 18-inch centers around the full perimeter of concrete base.

For supported equipment, install epoxy-coated anchor bolts that extend through concrete base and anchor into structural concrete floor.

Place and secure anchorage devices. Use setting drawings, templates, diagrams, instructions, and directions furnished with items to be embedded.

Install anchor bolts to elevations required for proper attachment to supported equipment.

Temporary Lifting Provisions: Remove temporary lifting eyes, channels, and brackets and temporary blocking of moving parts from enclosures and components.

Install fuses in each fusible-switch enclosed controller.

Install fuses in control circuits if not factory installed. Comply with requirements in Division 26 Section "Fuses."

Install heaters in thermal overload relays. Select heaters based on actual nameplate full-load amperes after motors have been installed.

Install, connect, and fuse thermal-protector monitoring relays furnished with motor-driven equipment.

Install power factor correction capacitors. Connect to the line/load side of overload relays. If connected to the load side of overload relays, adjust overload heater sizes to accommodate the reduced motor full-load currents.

Comply with NECA 1.

IDENTIFICATION

Identify enclosed controllers, components, and control wiring. Comply with requirements for identification specified in Division 26 Section "Identification for Electrical Systems."

Identify field-installed conductors, interconnecting wiring, and components; provide warning signs.

Label each enclosure with engraved nameplate.

Label each enclosure-mounted control and pilot device.

CONTROL WIRING INSTALLATION

Install wiring between enclosed controllers and remote devices. Comply with requirements in Division 26 Section "Control-Voltage Electrical Power Cables."

Bundle, train, and support wiring in enclosures. Use 'Panduit' where possible.

Connect selector switches and other automatic-control selection devices where applicable.

Connect selector switches to bypass only those manual- and automatic-control devices that have no safety functions when switch is in manual-control position.

Connect selector switches with enclosed-controller circuit in both manual and automatic positions for safety-type control devices such as low- and high-pressure cutouts, high-temperature cutouts, and motor overload protectors.

FIELD QUALITY CONTROL

Perform tests and inspections.

Manufacturer's Field Service: Engage a factory-authorized service representative to inspect components, assemblies, and equipment installations, including connections, and to assist in testing.

Acceptance Testing Preparation:

Test insulation resistance for each enclosed controller, component, connecting supply, feeder, and control circuit.

Test continuity of each circuit.

Tests and Inspections:

Inspect controllers, wiring, components, connections, and equipment installation. Test and adjust controllers, components, and equipment.

Test insulation resistance for each enclosed-controller element, component, connecting motor supply, feeder, and control circuits.

Test continuity of each circuit.

Verify that voltages at controller locations are within plus or minus 10 percent of motor nameplate rated voltages. If outside this range for any motor, notify Owner before starting the motor(s).

Test each motor for proper phase rotation.

Perform each electrical test and visual and mechanical inspection stated in NETA Acceptance Testing Specification. Certify compliance with test parameters. Correct malfunctioning units on-site, where possible, and retest to demonstrate compliance; otherwise, replace with new units and retest.

Perform the following infrared (thermographic) scan tests and inspections and prepare reports:

Initial Infrared Scanning: After Substantial Completion, but not more than 60 days after Final Acceptance, perform an infrared scan of each multi-pole enclosed controller. Remove front panels so joints and connections are accessible to portable scanner.

Follow-up Infrared Scanning: Perform an additional follow-up infrared scan of each multi-pole enclosed controller 11 months after date of Substantial Completion.

Instruments and Equipment: Use an infrared scanning device designed to measure temperature or to detect significant deviations from normal values. Provide calibration record for device.

Test and adjust controls, remote monitoring, and safeties. Replace damaged and malfunctioning controls and equipment.

Enclosed controllers will be considered defective if they do not pass tests and inspections.

Prepare test and inspection reports including a certified report that identifies enclosed controllers and that describes scanning results. Include notation of deficiencies detected, remedial action taken, and observations after remedial action.

ADJUSTING

Set field-adjustable switches, auxiliary relays, time-delay relays, timers, and overload-relay pickup and trip ranges.

Adjust overload-relay heaters or settings if power factor correction capacitors are connected to the load side of the overload relays.

Adjust the trip settings of MCPs and thermal-magnetic circuit breakers with adjustable instantaneous trip elements. Initially adjust to six times the motor nameplate full-load ampere ratings and attempt to start motors several times, allowing for motor cool-down between starts. If tripping occurs on motor inrush, adjust settings in increments until motors start without tripping. Do not exceed eight times the motor full-load amperes (or 11 times for NEMA Premium Efficient motors if required). Where these maximum settings do not allow starting of a motor, notify Engineer before increasing settings.

Set field-adjustable switches and program microprocessors for required start and stop sequences in reduced-voltage solid-state controllers.

PROTECTION

Temporary Heating: Apply temporary heat to maintain temperature according to manufacturer's written instructions until enclosed controllers are ready to be energized and placed into service.

Replace controllers whose interiors have been exposed to water or other liquids prior to Substantial Completion.

DEMONSTRATION

Engage a factory-authorized service representative to train Owner's maintenance personnel to adjust, operate, and maintain enclosed controllers.

END OF SECTION

THIS PAGE INTENTIONALLY LEFT BLANK

SECTION 26 95 00 - FIELD ELECTRICAL TESTING

PART 1 - GENERAL

RELATED DOCUMENTS

Requirements of Division 26 "COMMON WORK RESULTS FOR ELECTRICAL" apply to this Section.

SECTION INCLUDES

Testing by Installing Contractor

Testing by Independent Certified Testing Contractor

All testing shall be witness with the Owner, Commissioning Agent, Engineer or Architect.

SUBMITTALS: SUBMIT THE FOLLOWING IN ACCORDANCE WITH SECTION 260500.

Contractor shall submit experience and certified of testing firm and individuals who will be performing and evaluating tests before any tests are done.

Contractor shall submit in writing at least 24 hours in advance notification of the occurrence of any test described in this section.

Contractor shall record all test data and submit three (3) copies for review. In addition to the test data, each record shall include; date of test, ambient temperature, climate conditions, instruments used, names of test personnel and witnesses and identification of items tested.

The testing firm shall maintain a written record of all tests and, upon completion of project, shall assemble and certify a final test report.

QUALITY ASSURANCE: COMPLY WITH THE FOLLOWING.

All tests shall be done in accordance with all applicable codes and standards.

Qualifications of Testing Firm:

The testing firm shall be an independent testing organization which can function as an unbiased testing authority, professionally independent of the manufacturers, suppliers, and installers of equipment or systems evaluated by the testing firm.

The testing firm shall be regularly engaged in the testing of electrical equipment devices, installations, and systems.

The testing firm shall meet OSHA criteria for accreditation of testing laboratories, Title 29, or be a Full Member company of the International Electrical Testing Association (IETA).

The testing firm shall utilize engineers and technicians who are regularly employed by the firm for testing services.

PART 2 - PRODUCT (NOT USED)

PART 3 - EXECUTION

DIVISION OF RESPONSIBILITY

All tests indicate in this specification section shall be done by the testing firm except the installing contractor shall be responsible for the following:

The contractor shall perform routine insulation-resistance, continuity, and rotation tests for all distribution and utilization equipment prior to and in addition to tests performed by the testing firm specified herein.

120 Volt General Purpose Receptacles: All 120 volt general purpose receptacles shall be tested for correct connection using a Hubbell Catalog #5200 or equal receptacle tester.

120 Volt Ground Fault Circuit, Interrupter (GFCI) Receptacles: All 120 volt GFCI receptacles shall be tested for correct connection and rating using Hubbell Catalog #GFT-2G with a range of 2 to 7 milliamps.

Enclosed (Disconnect) Switches: Subsequently to completion of installation of electrical disconnect switches, energize circuits and demonstrate capability and compliance with requirements. Except as otherwise indicated, do not test switches by operating them under load. However, demonstrate switch operation through six opening/closing cycles with circuit unloaded. Open each switch enclosure for inspection of interior, mechanical and electrical connections, fuse installation, and for verification of type and rating of fuses installed. Correct deficiencies then retest to demonstrate compliance. Remove and replace defective units with new units and retest.

Light Switching: Verify proper connection and operation of switches for lighting fixtures.

Lighting Contactors: Demonstrate proper operation of lighting contactors for all items indicated in Division 16.

Balancing Loads: After Substantial Completion, but not more than two months after Final Acceptance, conduct load-balancing measurements on panelboards and circuit changes as follows:

Perform measurements during period of normal working load as advised by the Owner.

Perform load-balancing circuit changes outside the normal occupancy/working schedule of the facility. Make special arrangements with Owner to avoid disrupting critical 24-hour services such as fax machines and on-line data processing, computing, transmitting, and receiving equipment.

Recheck loads after circuit changes during normal load period. Record all load readings before and after changes and submit test records.

Tolerance: Difference between phase loads exceeding 20 percent at any one panelboard is not acceptable. Rebalance and recheck as required to meet this minimum requirement.

The Contractor shall supply a suitable and stable source of electrical power to each test site. The testing firm shall specify the specific power requirements.

The Contractor shall notify the testing firm when equipment becomes available for acceptance tests. Work shall be coordinated to expedite project scheduling.

Any system, material, or workmanship which is found defective on the basis of acceptance tests shall be reported to the Owner/Engineer's representative replaced or repaired by the Contractor at no cost to the Owner, and retested.

An electrical system will not be accepted until tested in its entirety and results reported to the Owner.

TESTING FIRM; THE TESTING FIRM SHALL TEST THE FOLLOWING EQUIPMENT AS INDICATED IN EACH SECTION:

600V Wire and Cables

Grounding and Bonding.

Dry Type Transformers.

Enclosed Motor Controllers

Motor Control Center

Panelboards

Switchboards/Switchgear

INFRARED BASELINE SCANNING

Provide scanning for Switchboards, Transformers, MCC's, Panelboards, Generator connection points, Copper Busses, Circuit Breakers, Terminations and Transfer Switches.

After Substantial Completion, but not more than two months after Final Acceptance, perform an infrared IR scan in Section 26-95-00 Part 3, 3.2 of each panelboard, switchboard and pad mounted transformer. Remove fronts to make joints and connections accessible to a portable scanner.

Instrument: Use an approved infrared IR scanning device designed to measure temperature or detect significant deviations from normal values. Provide calibration record for device used.

Record of Infrared IR Scanning: Prepare a certified report identifying panelboards checked and describing results of scanning. Include notation of deficiencies detected, remedial action taken, and observations after remedial action.

END OF SECTION

THIS PAGE WAS LEFT BLANK INTENTIONALLY

MECHANICAL DEMOLITION NOTES

1. WHERE WORK IN RENOVATED AREAS AFFECTS SYSTEMS IN OTHER AREAS OF THE FACILITY, THE CONTRACTOR TO COORDINATE THIS WORK WITH THE OWNER. COORDINATE WORK WITH OWNER TO MINIMIZE THE DISRUPTION/DISCOMFORT TO OCCUPIED AREAS. THE CONTRACTOR TO REPAIR ALL EXISTING CONDITIONS DAMAGED DURING DEMOLITION OR RENOVATION.
2. REPAIR FINISHES IN ANY DAMAGED AREAS OUTISDE OF CONSTRUCTION LIMIT. MATCH EXISTING.
3. TAKE PRECAUTIONS TO AVOID DAMAGE TO ADJACENT BUILDING SYSTEMS & EQUIPMENT DURING DEMOLITION. PROVIDE ADDITIONAL PROTECTION AS REQUIRED. REMOVE & TURN OVER ITEMS IDENTIFIED BY OWNER FOR SALVAGE. DISPOSE OF ALL OTHER DEMOLISHED MATERIALS IN ACCORDANCE WITH JURISDICTIONAL REQUIREMENTS.
4. PERFORM DEMOLITION WORK SHOWN ON THE PLAN. VERIFY THE DEMOLITION WORK SHALL NOT ADVERSELY AFFECT OTHER AREAS WHICH ARE NOT PART OF CONSTRUCTION AREA OR DEMOLITION. VERIFY PRIOR TO DEMOLISHING SAME.
5. THE CONTRACTOR SHALL VISIT THE SITE PRIOR TO SUBMITTING HIS BID TO VERIFY EXISTING CONDITIONS. BY SUBMITTING HIS BID THE CONTRACTOR ACKNOWLEDGES THAT HE HAS VISITED THE SITE AND THAT HIS BID IS ADEQUATE TO PERFORM WORK NECESSARY TO MAKE SYSTEM OPERATIONAL AT NO ADDITIONAL COSTS TO THE OWNER. INCLUDE ALL DEMOLITION REQUIRED TO COMPLETE THE WORK, WHETHER INDICATED ON PLANS OR NOT.
6. COORDINATE SCHEDULING OF ALL UTILITY AND SERVICE INTERRUPTIONS REQD. AT LEAST 48 HOURS IN ADVANCE WITH OWNER.
7. GENERAL CONTRACTOR OR ANY OF HIS SUBORDINATES ARE NOT TO SHUT OFF ANY UTILITIES OR SERVICES, THIS IS TO BE DONE BY FACILITY OWNERS/MAINTANENCE DEPARTMENT ONLY.

MECHANICAL GENERAL NOTES

1. SCHEDULED MANUFACTURERS ARE BASIS OF DESIGN. SEE SPECIFICATIONS FOR PRE-APPROVED MANUFACTURERS. SUBMIT OTHER NON-LISTED VENDORS FOR ENGINEERING REVIEW PRIOR TO BID.
2. MAJOR EQUIPMENT SHOWN ON THE PLANS AND ELEVATIONS ILLUSTRATE THE GENERAL ARRANGEMENT AND SPACE ALLOCATION. FIELD VERIFY SPACE REQUIREMENTS FOR EACH SYSTEM COMPONENT USING MANUFACTURER CERTIFIED SHOP DRAWINGS AND MAKE NECESSARY ADJUSTMENTS IN EQUIPMENT PLACEMENT AND CONNECTIONS TO ACCOMMODATE THE EXACT EQUIPMENT TO BE INSTALLED WITHOUT ADDITIONAL COST TO OWNER.
3. PROVIDE SUPPORTS, ANCHOR BOLTS AND HANGERS FOR ALL EQUIPMENT. OTHER MISCELLANEOUS STEEL BRACING, SUPPORTS, AND REINFORCING STEEL REQUIRED TO SUPPORT EQUIPMENT SHALL BE FURNISHED AS PART OF THE SCOPE OF WORK OF DIVISION 23.
4. ALL WORK SHALL BE PERFORMED IN ACCORDANCE WITH ALL APPLICABLE CODES, STANDARDS AND AUTHORITIES HAVING JURISDICTION.
5. COMPLY WITH ALL REQUIREMENTS OF INTERNATIONAL ENERGY CONSERVATION CODE, IECC-2015
6. INCLUDE ALL NECESSARY COMPONENTS FOR COMPLETE AND FUNCTIONAL SYSTEMS.
7. SEAL ALL PENETRATIONS OF FLOORS, SMOKE WALLS, FIRE WALLS WITH LISTED FIRE STOP MATERIALS. SEAL ALL EXTERIOR WALL PENETRATIONS WEATHER TIGHT.
8. DO NOT RUN DUCT OR PIPE OVER ELECTRICAL PANELS. COORDINATE INSTALLATION LOCATIONS IN MECHANICAL ROOMS WITH EXISTING AND NEW ELECTRICAL AND PLUMBING WORK BEFORE ANY INSTALLATION.
9. COMPLETELY DEMOLISH ALL EQUIPMENT AND SYSTEMS INDICATED.
10. SECURE ALL REQUIRED CONSTRUCTION PERMITS. SECURE TDLR BOILER PERMIT APPLICATIONS AND BOILER INSPECTIONS REQUIRED BY STATE OF TEXAS.
11. CONFIRM CHILLED AND HEATING WATER SERVICE REQUIREMENTS WITH OWNER PRIOR TO BID. COORDINATE REQUIRED SYSTEM OUTAGES WITH OWNER DURING CONSTRUCTION IN ACCORDANCE WITH SERVICE REQUIREMENTS.
12. REFILL AND REPLENISH CHILLED AND HEATING WATER CHEMICAL TREATMENT. REFERENCE SPECIFICATIONS FOR FULL REQUIREMENTS.
13. THIS PROJECT INCLUDES TEST, BALANCE, AND COMMISSIONING SERVICES PROVIDED BY THE CONTRACTOR. REFERENCE SPECIFICATIONS FOR FULL REQUIREMENTS.
14. PROVIDE RECORD DRAWINGS OF THE ACTUAL INSTALLATION TO THE BUILDING OWNER OR THE DESIGNATED REPRESENTATIVE OF THE BUILDING OWNER. RECORD DRAWINGS SHALL INCLUDE AS A MINIMUM THE LOCATION AND PERFORMANCE DATA ON EACH PIECE OF EQUIPMENT, GENERAL CONFIGURATION OF DUCT AND PIPE DISTRIBUTION SYSTEM INCLUDING SIZES, AND THE TERMINAL AIR OR WATER DESIGN FLOW RATES.
15. PROVIDE OPERATING AND MAINTENANCE MANUALS TO THE BUILDING OWNER OR THE DESIGNATED REPRESENTATIVE OF THE BUILDING OWNER. THESE MANUALS SHALL BE IN ACCORDANCE WITH INDUSTRY-ACCEPTED STANDARDS, AND SHALL INCLUDE, AT A MINIMUM, THE FOLLOWING: (A) SUBMITTAL DATA STATING EQUIPMENT SIZE AND SELECTED OPTIONS FOR EACH PIECE OF EQUIPMENT REQUIRING MAINTENANCE. (B) OPERATION MANUALS AND MAINTENANCE MANUALS FOR EACH PIECE OF EQUIPMENT REQUIRING MAINTENANCE, EXCEPT EQUIPMENT NOT FURNISHED AS PART OF THE PROJECT. REQUIRED ROUTINE MAINTENANCE ACTIONS SHALL BE CLEARLY IDENTIFIED. (C) NAMES AND ADDRESSES OF AT LEAST ONE SERVICE AGENCY. (D) HVAC CONTROLS SYSTEM MAINTENANCE AND CALIBRATION INFORMATION, INCLUDING WIRING DIAGRAMS, SCHEMATICS, AND CONTROL SEQUENCE DESCRIPTIONS. DESIRED OR FIELD-DETERMINED SET-POINTS SHALL BE PERMANENTLY RECORDED ON CONTROL DRAWINGS AT CONTROL DEVICES OR, FOR DIGITAL CONTROL SYSTEMS, IN PROGRAMMING COMMENTS. (E) A COMPLETE NARRATIVE OF HOW EACH SYSTEM IS INTENDED TO OPERATE, INCLUDING SUGGESTED SET-POINTS.
16. HVAC CONTROL SYSTEMS SHALL BE TESTED TO ENSURE THAT CONTROL ELEMENTS ARE CALIBRATED, ADJUSTED, AND PROPER WORKING CONDITION AS REQUIRED BY COMMERCIAL ENERGY CONSERVATION CODE.

MECHANICAL SYMBOLS LEGEND

	SUPPLY AIR DUCT UP (PLAN)	A X CFM	DIFFUSER TYPE, CFM		CHECK VALVE, SWING GATE
	SUPPLY AIR DUCT DOWN (PLAN)	T	THERMOSTAT - MOUNT 48" AFF UNO		PRESSURE RELIEF VALVE
	RETURN OR OUTSIDE AIR DUCT UP (PLAN)	H	HUMIDISTAT	PRV	PRESSURE REDUCING VALVE
	RETURN OR OUTSIDE AIR DUCT DOWN (PLAN)	F	FIRESTAT	P	PRESSURE SENSOR
	EXHAUST AIR DUCT UP (PLAN)	ID	IONIZATION DETECTOR	M	DIFFERENTIAL PRESSURE SENSOR
	EXHAUST AIR DUCT DOWN (PLAN)	SD	SMOKE DETECTOR		STRAINER
	RETURN AIR/TRANSFER AIR BOOT		PIPE UP		PLUG VALVE
	CEILING SUPPLY AIR DEVICE		PIPE DOWN		NEEDLE VALVE
	SIDEWALL SUPPLY/EXHAUST REGISTER		CAP		FLEXIBLE CONNECTION
	CEILING RETURN REGISTER		90° ELBOW	EJ	EXPANSION JOINT
	CEILING EXHAUST REGISTER		45° ELBOW		THERMOMETER
	RETURN AIR GRILLE WITH BOOT		45° ELBOW DOWN (OGEE)	TW	THERMOMETER WELL
	BRANCH DUCT TAP		TEE		TEST PLUG
	DUCT SPLIT WITH SPLITTER DAMPER		TEE UP		PRESSURE GAUGE W/GAUGE COCK
AD	ACCESS DOOR		TEE DOWN		MANUAL AIR VENT
	TRANSITION IN DUCT		TOP CONNECTION		AUTOMATIC AIR VENT
	FLEXIBLE DUCT CONN. TO RECTANGULAR DUCT WITH SPIN-IN CONNECTOR		CROSS	S	SOLENOID VALVE
AP	ACCESS PANEL		UNION (SCREWED)	FS	FLOW SWITCH
	DUCT ELBOW WITH TURNING VANES		UNION (FLANGED)	M	MOTORIZED VALVE
	DUCT ELBOW WITHOUT VANES	T	DUCT MOUNTED TEMPERATURE SENSOR		STEAM TRAP
	FLEXIBLE CONNECTION, FLEXIBLE DUCT	P	DUCT MOUNTED PRESSURE SENSOR		STEAM MOISTURE SEPARATOR
VD	VOLUME DAMPER	SD	DUCT MOUNTED SMOKE DETECTOR	FM	FLOW METER
F	MOTORIZED VOLUME DAMPER		PIPE BREAK	T	TEMP SENSOR
F	FIRE DAMPER		CONCENTRIC REDUCER		RED. PRESS PRINCIPAL BACKFLOW PREVENTER
SD	SMOKE DAMPER		ECCENTRIC REDUCER	CHWR	CHILLED WATER RETURN
F	COMBINATION FIRE/SMOKE DAMPER		END SUCTION PUMP	CHWS	CHILLED WATER SUPPLY
AFS	AIR FLOW SWITCH		BALL VALVE	CWR	CONDENSER WATER RETURN
APD	AIR PRESSURE DIFFERENTIAL SWITCH		BUTTERFLY VALVE	CWS	CONDENSER WATER SUPPLY
α	RISE IN DUCT ELEVATION		GATE VALVE	HHWR	HOT WATER RETURN
α	DROP IN DUCT ELEVATION		GATE VALVE WITH QUICK DISCONNECT	HHWS	HOT WATER SUPPLY
SD DIM	SPLITTER DAMPER - DIMENSION AS NOTED ON DRAWING		TWO-WAY VALVE (PNEUMATIC)	CD	CONDENSATE DRAIN
BDD	BACK DRAFT DAMPER		CIRCUIT SETTER	HRS	HEAT RECOVERY SUPPLY
UCD 1"	UNDERCUT DOOR 1"		GLOBE VALVE	HRR	HEAT RECOVERY RETURN
RE: 1/M-7	REFER TO DETAIL #1 ON DRAWING M-7	M	MOTORIZED BUTTERFLY VALVE	LPR	STEAM CONDENSATE

NOTE:
NOT ALL ITEMS NOT NECESSARILY USED.

Infrastructure Associates
INFRASTRUCTURE ASSOCIATES, INC.
6117 RICHMOND AVENUE, SUITE 200
HOUSTON, TEXAS 77057
TBPE REGISTRATION NO. F-4506
(713) 622-0120 PH (713) 622-0557 FAX
WWW.IAHOUSTON.COM

THESE DRAWINGS ARE INSTRUMENTS OF SERVICE AND ARE THE PROPERTY OF SIGMA ENGINEERS, INC. ALL DESIGNS AND INFORMATION HEREIN ARE FOR USE ON THE SPECIFIED PROJECT AND SHALL NOT BE USED OTHERWISE WITHOUT THE WRITTEN CONSENT OF SIGMA ENGINEERS, INC.
REGISTRATION # F-003645
COPYRIGHT 2022 BY SIGMA ENGINEERS, INC.
ALL RIGHTS RESERVED

SIGMAENGINEERS
Innovative Solutions | Solid Designs
4099 Calder Avenue
Beaumont, Texas 77706
Phone (409) 898-1001
www.sigmaengineers.com

JEFFERSON COUNTY REGIONAL AIRPORT
MAIN TERMINAL HVAC REVAMP
5000 JERRY WARE DR.
BEAUMONT, TEXAS

STATE OF TEXAS
MATT A FLUKINGER
119970
LICENSED
PROFESSIONAL ENGINEER
08/19/2022
PAS #:

ISSUED FOR
ISSUE FOR PERMIT
06/19/2022

KT, AA
DRAWN BY
MF, SK
CHECKED BY
MF, SK
APPROVED BY

SHEET NUMBER
M1.00
SYMBOLS, NOTES, AND LEGEND

22-413
PROJECT NO.

AIR SEPARATOR SCHEDULE (AS)

PLAN MARK	LOCATION	SYSTEM	PIPE CONNECTIONS		FLOW (GPM)	WPD (FT WG)	MANUFACTURER	MODEL	NOTES
			INLET (IN)	OUTLET (IN)					
AS-1	CHILLER YARD	CHILLED WATER	3	3	280	5	BELL AND GOSSETT	--	1
AS-2	MECH ROOM	HOT WATER	3	3	200	5	BELL AND GOSSETT	--	1

NOTES:

1. PROVIDE IN-LINE, LINE SIZE AIR SEPARATOR.

AIR COOLED CHILLER SCHEDULE

MARK	NOMINAL CAPACITY (TONS)	MINIMUM CAPACITY (TONS)	TOTAL UNIT POWER (KW)	COOLER					AIR COOLED CONDENSER	ELECTRIC SUPPLY	MCA	MOCP	OPERATING WEIGHT LBS.	REFRIGERANT	MAKE AND MODEL	REMARKS
				FLOW GPM	ENT. FLUID TEMP° F	LVG. FLUID TEMP°F	MAX FLUID PRESS. DROP FT.	FLUID TYPE	AMBIENT TEMP° F							
C-1	80	72	101	175	58	44	12.5	WATER	105	460/3/60	181		4650	R-134A	YORK YLAA SERIES	ALL
C-2	EXISTING CHILLER															

NOTES:

1. PROVIDE UNIT SUITABLE FOR LOW AMBIENT OPERATION TO 0 DEGREES F.
2. PROVIDE UNIT WITH SINGLE POINT POWER CONNECTION.
3. PROVIDE UNIT WITH VARIABLE SPEED TEAO CONDENSER FAN MOTORS.
4. PROVIDE FACTORY SUPPLIED NEOPRENE VIBRATION ISOLATORS.
5. PROVIDE CHILLERS WITH HERMETIC - SCROLL COMPRESSORS.
6. PROVIDE FACTORY INSTALLED THERMAL DISPERSION TYPE FLOW SWITCH.
7. PROVIDE CHILLER CAPABLE OF OPERATING AT 57% OF DESIGN FLOW RATE.
8. SELECT THE CHILLERS FOR VARIABLE PRIMARY CHILLED WATER FLOW APPLICATION.
9. PROVIDE CONDENSER COILS WITH FACTORY E-COAT AND HAIL GUARDS.
10. PROVIDE CHILLERS WITH FACTORY REFRIGERANT CIRCUIT ISOLATION VALVES.
11. PROVIDE CHILLER WITH CONTROLS COMMUNICATION INTERFACE TO EXISTING JCI BAS CONTROL SYSTEM.

VERTICAL WATER TUBE BOILER SCHEDULE

PLAN MARK	MANUFACTURER	TYPE	CAPACITY		DESIGN WATER TEMP		FLOW (GPM)	BURNER	NOTES
			GROSS OUTPUT (MBH)	GROSS INPUT (MBH)	SUPPLY (F)	RETURN (F)		NATURAL GAS INPUT (PRESSURE, SIZE)	
B-1	LOCHINVAR	POWERFIN	1,680	2,000	180	150	175	4" TO 14" WC, 1-1/2" NPT	ALL
									ALL

NOTES:

1. PROVIDE LOW WATER CUT-OUT.
2. PROVIDE HIGH LIMIT CONTROL-AUTO RESET.
3. PROVIDE BOILER WITH FACTORY WIRED CIRCULATION PUMP MOTOR STARTER.
4. PROVIDE BOILERS WITH LOW NOX EMISSION BURNERS.
5. PROVIDE BOILERS WITH REMOTE HW SUPPLY TEMPERATURE SENSOR/THERMAL WELL AND OUTSIDE AIR TEMP SENSOR.
6. PROVIDE BOILER WITH MODULATING POWER BURNER WITH AT LEAST 4:1 TURNDOWN RATIO.
7. PROVIDE BOILERS WITH FACTORY INSTALLED DIGITAL CONTROLLER. REFERENCE CONTROL DRAWING AND SPECIFICATIONS FOR ADDITIONAL REQUIREMENTS.
8. PROVIDE BOILER WITH PRESSURE VESSEL DESIGNED AND STAMPED FOR 160 PSIG WORKING PRESSURE. AND 50 PSIG ASME SAFETY RELIEF VALVE.

PUMP SCHEDULE

PLAN MARK	LOCATION	SERVICE	SERIES & MODEL	TYPE	GPM	HEAD (FT)	RPM	HP	ELECTRIC SUPPLY	REMARKS
CHWP-1	CHILLER YARD	CHILLED WATER	B&G SERIES 1510 MODEL 2EB	FRAME-MOUNTED END-SUCTION	140	95	1,750	10	480/3/60	1,2,3
CHWP-2	CHILLER YARD	CHILLED WATER	B&G SERIES 1510 MODEL 2EB	FRAME-MOUNTED END-SUCTION	140	95	1,750	10	480/3/60	1,2,3
HWP-1	MECH ROOM	BOILER CIRC	B&G SERIES 90 MODEL 2AAB	IN-LINE	115	20	1,750	1.0	480/3/60	4
HWP-2	MECH ROOM	HEATING WATER	B&G SERIES E-1532 MODEL 2AD	IN-LINE	200	90	3,550	7.5	480/3/60	1,2,3
HWP-3	MECH ROOM	HEATING WATER	B&G SERIES E-1532 MODEL 2AD	IN-LINE	200	90	3,550	7.5	480/3/60	1,2,3

NOTES:

1. PROVIDE PUMPS WITH MATCHING VARIABLE SPEED.
2. PROVIDE PUMPS WITH PREMIUM EFFICIENCY, INVERTER DUTY TEFC MOTORS.
3. PROVIDE PUMPS WITH SUCTION DIFFUSER.
4. PROVIDE PUMPS WITH PREMIUM EFFICIENCY TEFC MOTOR AND HOA MOTOR STARTER.

Infrastructure Associates
INFRASTRUCTURE ASSOCIATES, INC.
6117 RICHMOND AVENUE, SUITE 200
HOUSTON, TEXAS 77057
TBPE REGISTRATION NO. F-4506
(713) 622-0120 PH (713) 622-0557 FAX
WWW.IAHOUSTON.COM

THESE DRAWINGS ARE INSTRUMENTS OF SERVICE AND ARE THE PROPERTY OF SIGMA ENGINEERS, INC. ALL DESIGNS AND INFORMATION HEREIN ARE FOR USE ON THE SPECIFIED PROJECT AND SHALL NOT BE USED OTHERWISE WITHOUT THE WRITTEN CONSENT OF SIGMA ENGINEERS, INC.
REGISTRATION # F-003645
COPYRIGHT 2022 BY SIGMA ENGINEERS, INC. ALL RIGHTS RESERVED

SIGMAENGINEERS
Innovative Solutions | Solid Designs
4099 Calder Avenue
Beaumont, Texas 77706
Phone (409) 898-1001
www.sigmaengineers.com

JEFFERSON COUNTY REGIONAL AIRPORT
MAIN TERMINAL HVAC REVAMP
5000 JERRY WARE DR.
BEAUMONT, TEXAS

STATE OF TEXAS
MATT A FLUKINGER
119970
LICENSED
PROFESSIONAL ENGINEER
08/19/2022

TAS #:

ISSUED FOR
ISSUE FOR PERMIT
08/19/2022

KT, AA
DRAWN BY
MF, SK
CHECKED BY
MF, SK
APPROVED BY

SHEET NUMBER
M1.01
SCHEDULES

22-413
PROJECT NO.

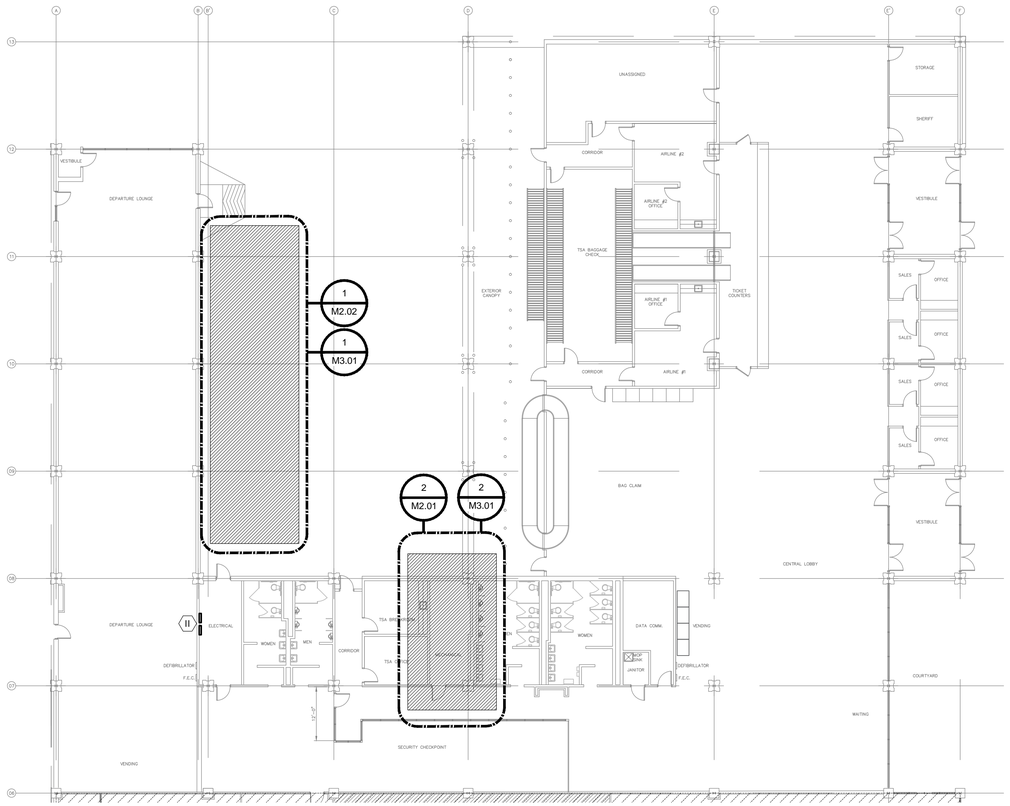

01 OVERALL FLOOR PLAN

SCALE: 1/16"=1'-0"

KEYED NOTES:

1. DEMO EXISTING BOILER AND REPLACE WITH NEW BOILER PER SCHEDULE.
2. DISCONNECT EXISTING WATER AND GAS PIPING FROM BOILER AND RE-CONNECT WITH NEW BOILER.
3. DISCONNECT EXISTING 14" DIA VENT AND RECONNECT TO NEW BOILER.
4. DEMO EXISTING PUMPS.
5. DEMO EXISTING CONCRETE PAD.
6. EXTEND EXISTING CONCRETE PAD TO ACCOMMODATE BOILER AND NEW PUMPS AS REQUIRED. REFER 01/M4.02 FOR PUMP INSTALLATION DETAIL. REFER 02/M4.02 FOR CONCRETE PAD INSTALLATION DETAIL.
7. REMOVE AND RELOCATE EXISTING EXP. TANK.
8. EXTEND EXISTING 1 1/2" N.G. PIPING TO NEW BOILER. REFER 05/M4.01 FOR INSTALLATION DETAIL.
9. PROVIDE NEW AIR SEPARATOR AS PER SCHEDULE. REFER 06/M4.01 FOR INSTALLATION DETAIL.
10. REINSTALL EXP. TANK ON EXISTING CONCRETE PAD. REFER 06/M4.01 FOR INSTALLATION DETAIL AND 02/M4.02 FOR CONCRETE PAD INSTALLATION DETAIL.
11. REPLACE EXISTING CHW PUMP VFDS.

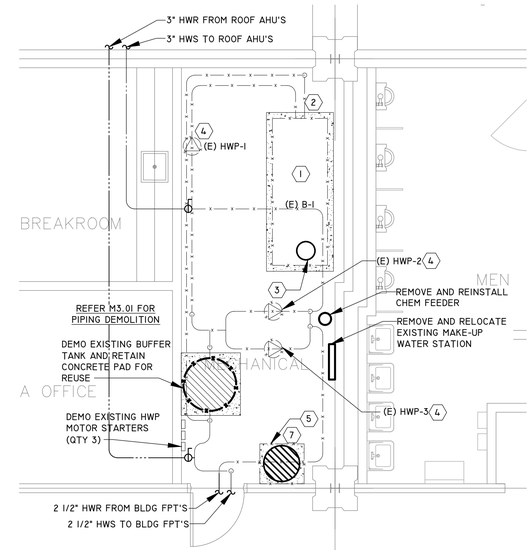

02 ENLARGED DEMO PLAN

SCALE: 1/4"=1'-0"

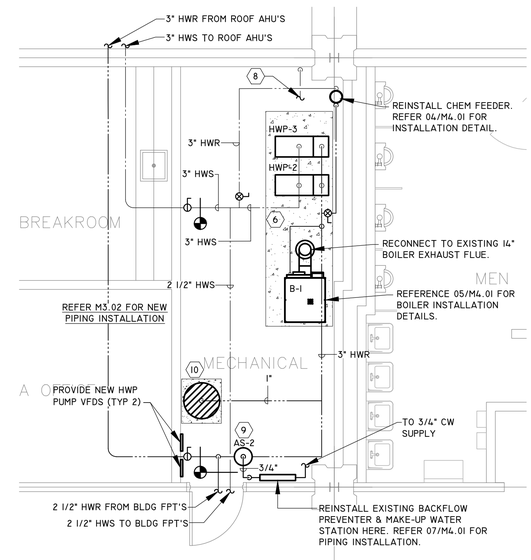

03 ENLARGED PROPOSED PLAN

SCALE: 1/4"=1'-0"

SIGMAENGINEERS
Innovative Solutions | Solid Designs
4099 Calder Avenue
Beaumont, Texas 77706
Phone (409) 898-1001
www.sigmaengineers.com

JEFFERSON COUNTY REGIONAL AIRPORT
MAIN TERMINAL HVAC REVAMP
5000 JERRY WARE DR.
BEAUMONT, TEXAS

STATE OF TEXAS
MATT A FLUKINGER
119970
LICENSED
PROFESSIONAL ENGINEER
08/19/2022

TAS #:

ISSUED FOR
ISSUE FOR PERMIT
08/19/2022

KT, AA
DRAWN BY
MF, SK
CHECKED BY
MF, SK
APPROVED BY

SHEET NUMBER
M2.01
CONSTRUCTION Plan

22-413
PROJECT NO.

Infrastructure Associates
INFRASTRUCTURE ASSOCIATES, INC.
6117 RICHMOND AVENUE, SUITE 200
HOUSTON, TEXAS 77057
TBPE REGISTRATION NO. F-4506
(713) 622-0120 PH (713) 622-0557 FAX
WWW.IAHOUSTON.COM

THESE DRAWINGS ARE INSTRUMENTS OF SERVICE AND ARE THE PROPERTY OF SIGMA ENGINEERS, INC. ALL DESIGNS AND INFORMATION HEREIN ARE FOR USE ON THE SPECIFIED PROJECT AND SHALL NOT BE USED OTHERWISE WITHOUT THE WRITTEN CONSENT OF SIGMA ENGINEERS, INC.
REGISTRATION # F-003645
COPYRIGHT 2022 BY SIGMA ENGINEERS, INC. ALL RIGHTS RESERVED

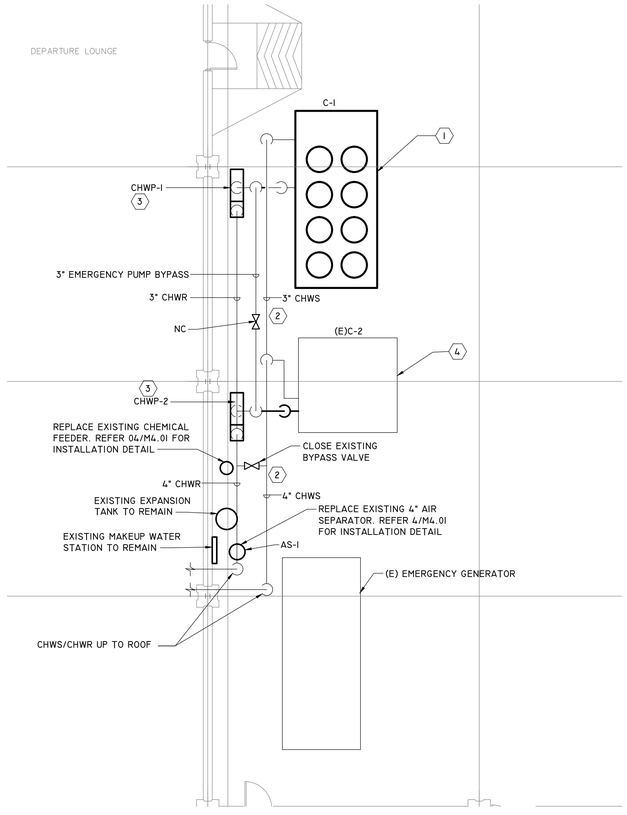

01 ENLARGED DEMO AND CONSTRUCTION PLAN - MECH YARD - HVAC

SCALE: 1/8"=1'-0"

KEYED NOTES:

1. REMOVE AND REPLACE EXISTING CHILLER WITH NEW CHILLER AS SCHEDULED. REFER 08/M4.01 FOR INSTALLATION DETAIL.
2. REMOVE ALL EXISTING ELASTOMERIC FOAM PIPE INSULATION AT CHILLER YARD AND REPLACE WITH NEW PHENOLIC FOAM PIPE INSULATION. REMOVE EXISTING PIPE JACKETING FROM ALL CHW PIPING AT CHILLER YARD, REPAIR AND RESEAL INSULATION VAPOR BARRIER AND COVER WITH NEW 0.020" THICK ALUMINUM PIPE JACKETING.
3. REMOVE AND REPLACE EXISTING CHILLER PUMP WITH NEW PUMP AS SCHEDULED. REFER 01/M4.01 FOR PUMP INSTALLATION DETAIL AND 02/M.402 FOR CONCRETE PAD INSTALLATION DETAIL.
4. EXISTING CHILLER TO REMAIN.

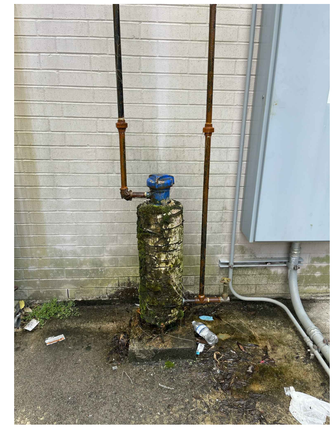

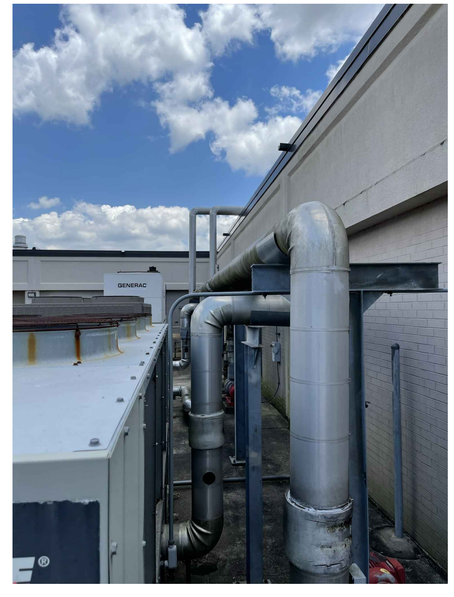

SIGMAENGINEERS
Innovative Solutions | Solid Designs
4099 Calder Avenue
Beaumont, Texas 77706
Phone (409) 898-1001
www.sigmaengineers.com

JEFFERSON COUNTY REGIONAL AIRPORT
MAIN TERMINAL HVAC REVAMP
5000 JERRY WARE DR.
BEAUMONT, TEXAS

STATE OF TEXAS
MATT A FLUKINGER
119970
LICENSED
PROFESSIONAL ENGINEER

AS # 08/19/2022

ISSUED FOR
ISSUE FOR PERMIT
08/19/2022

KT, AA
DRAWN BY
MF, SK
CHECKED BY
MF, SK
APPROVED BY

SHEET NUMBER
M2.02
CONSTRUCTION Plan

22-413
PROJECT NO.

Infrastructure Associates
INFRASTRUCTURE ASSOCIATES, INC.
6117 RICHMOND AVENUE, SUITE 200
HOUSTON, TEXAS 77057
TBPE REGISTRATION NO. F-4506
(713) 622-0120 PH (713) 622-0557 FAX
WWW.IAHOUSTON.COM

THESE DRAWINGS ARE INSTRUMENTS OF SERVICE AND ARE THE PROPERTY OF SIGMA ENGINEERS, INC. ALL DESIGNS AND INFORMATION HEREIN ARE FOR USE ON THE SPECIFIED PROJECT AND SHALL NOT BE USED OTHERWISE WITHOUT THE WRITTEN CONSENT OF SIGMA ENGINEERS, INC.
REGISTRATION # F-003645
COPYRIGHT 2022 BY SIGMA ENGINEERS, INC. ALL RIGHTS RESERVED

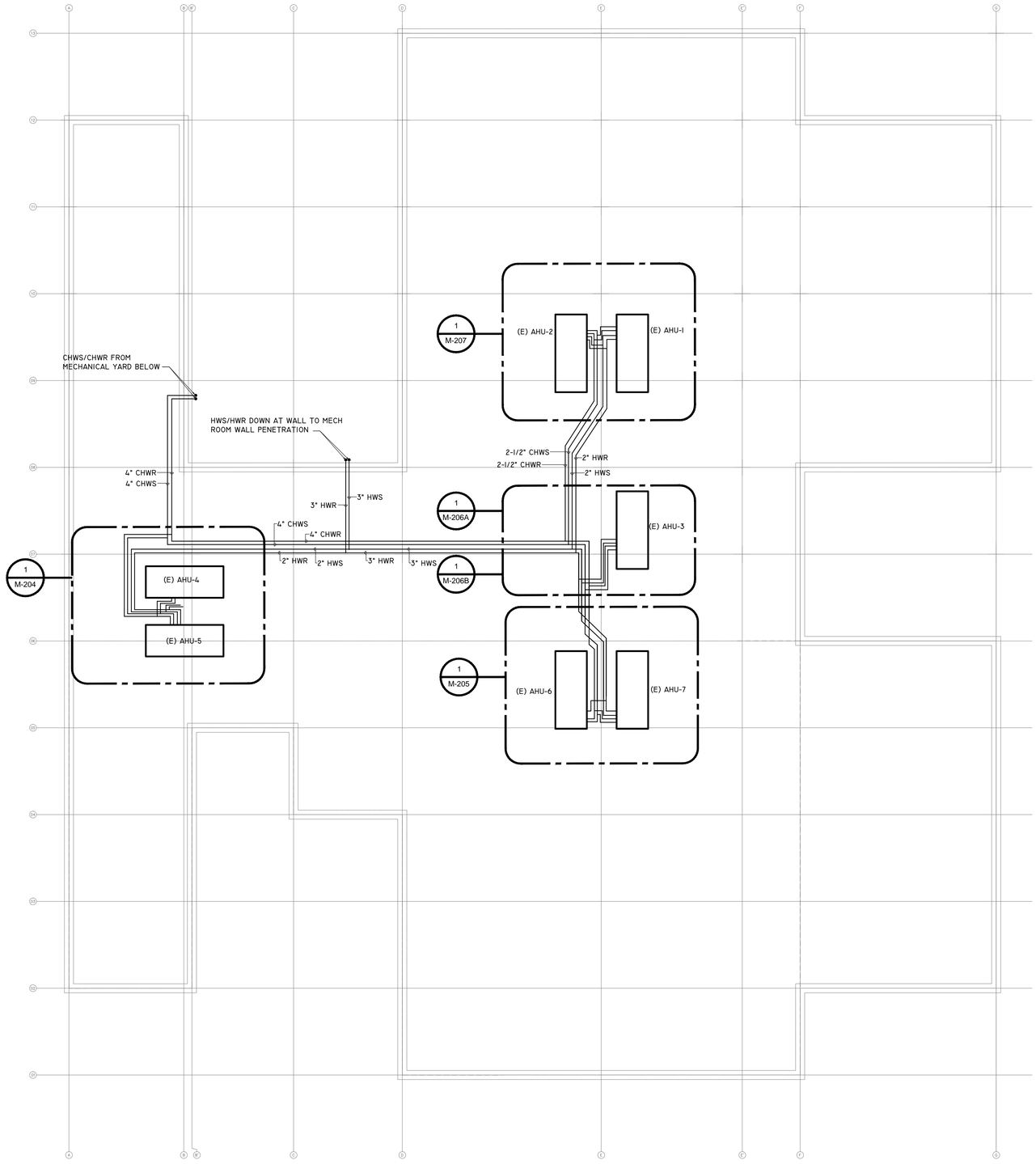

01 OVERALL PLAN - ROOF - HVAC

SCALE: 1/16"=1'-0"

SIGMAENGINEERS
Innovative Solutions | Solid Designs
4099 Calder Avenue
Beaumont, Texas 77706
Phone (409) 898-1001
www.sigmaengineers.com

JEFFERSON COUNTY REGIONAL AIRPORT
MAIN TERMINAL HVAC REVAMP
5000 JERRY WARE DR.
BEAUMONT, TEXAS

STATE OF TEXAS
MATT A FLUKINGER
119970
LICENSED
PROFESSIONAL ENGINEER
08/19/2022

TAS #:

ISSUED FOR:
ISSUE FOR PERMIT
08/19/2022

KT, AA
DRAWN BY
MF, SK
CHECKED BY
MF, SK
APPROVED BY

SHEET NUMBER
M2.03
ROOF PLAN

22-413
PROJECT NO.

Infrastructure Associates
INFRASTRUCTURE ASSOCIATES, INC.
6117 RICHMOND AVENUE, SUITE 200
HOUSTON, TEXAS 77057
TBPE REGISTRATION NO. F-4506
(713) 622-0120 PH (713) 622-0557 FAX
WWW.IAHOUSTON.COM

THESE DRAWINGS ARE INSTRUMENTS OF SERVICE AND ARE THE PROPERTY OF SIGMA ENGINEERS, INC. ALL DESIGNS AND INFORMATION HEREIN ARE FOR USE ON THE SPECIFIED PROJECT AND SHALL NOT BE USED OTHERWISE WITHOUT THE WRITTEN CONSENT OF SIGMA ENGINEERS, INC.
REGISTRATION # F-003645
COPYRIGHT 2022 BY SIGMA ENGINEERS, INC.
ALL RIGHTS RESERVED

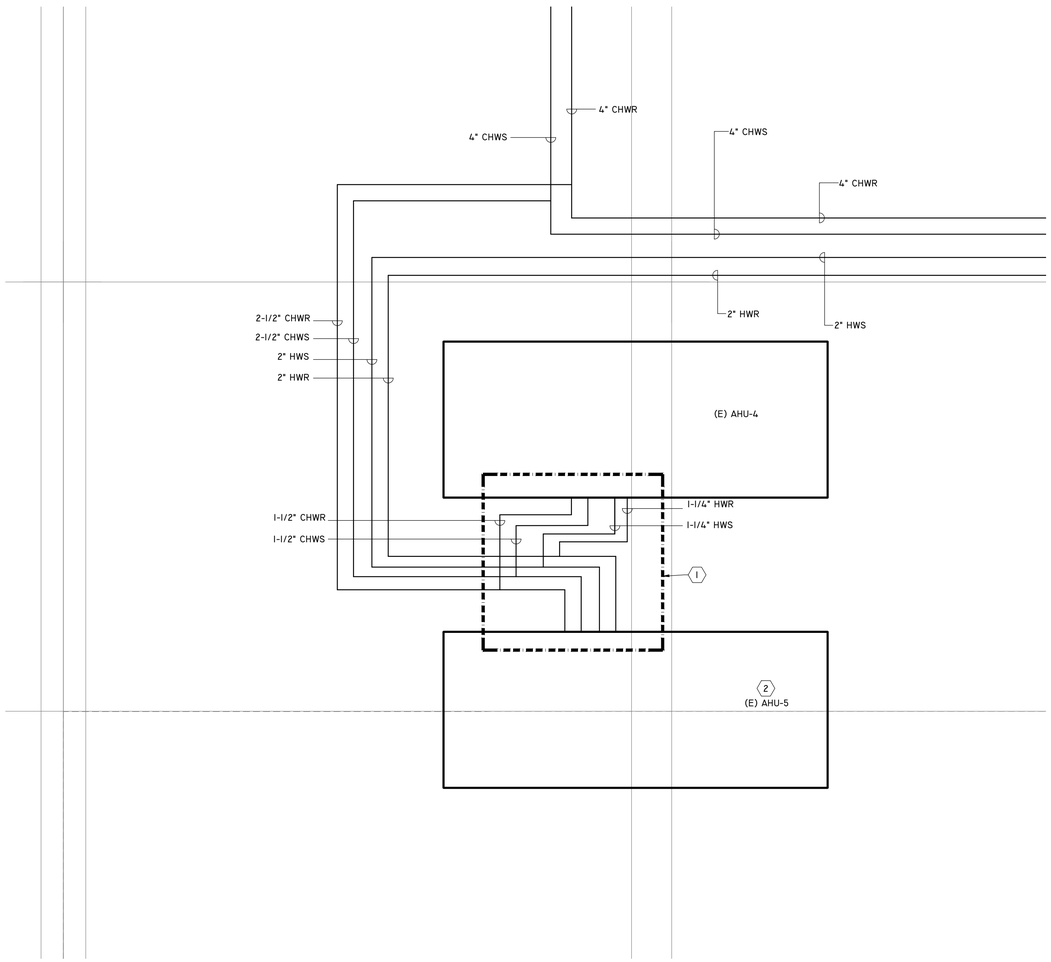

01 ENLARGED CONSTRUCTION PLAN - ROOF - HVAC

SCALE: 1/4"=1'-0"

KEYED NOTES:

1. PROVIDE PIPING INSULATION AND JACKETING PER SPECIFICATIONS ON ALL EXISTING PIPING WITH MISSING INSULATION. REFERENCE PICTURES FOR EXTENT OF SCOPE.
2. REPLACE AHU-5 EXISTING 2-WAY CHW CONTROL VALVE WITH NEW 3-WAY CONTROL VALVE. REFER 03/M4.01 FOR PIPING DETAIL. REBALANCE COIL TO 25 GPM.

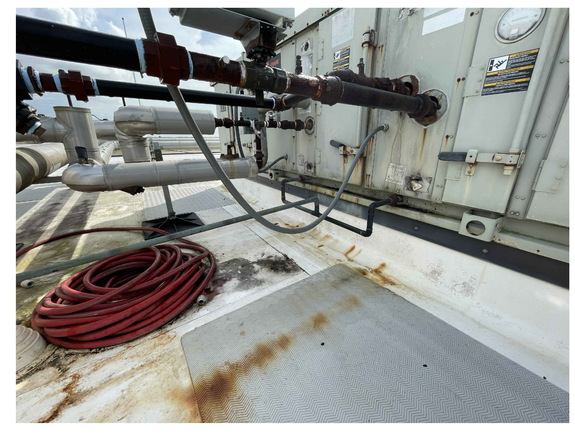

Infrastructure Associates
INFRASTRUCTURE ASSOCIATES, INC.
6117 RICHMOND AVENUE, SUITE 200
HOUSTON, TEXAS 77057
TBPE REGISTRATION NO. F-4506
(713) 622-0120 PH (713) 622-0557 FAX
WWW.IAHOUSTON.COM

THESE DRAWINGS ARE INSTRUMENTS OF SERVICE AND ARE THE PROPERTY OF SIGMA ENGINEERS, INC.
ALL DESIGNS AND INFORMATION HEREIN ARE FOR USE ON THE SPECIFIED PROJECT AND SHALL NOT BE USED OTHERWISE WITHOUT THE WRITTEN CONSENT OF SIGMA ENGINEERS, INC.
REGISTRATION # F-003645
COPYRIGHT 2022 BY SIGMA ENGINEERS, INC.
ALL RIGHTS RESERVED

SIGMAENGINEERS
Innovative Solutions | Solid Designs
4099 Calder Avenue
Beaumont, Texas 77706
Phone (409) 898-1001
www.sigmaengineers.com

JEFFERSON COUNTY REGIONAL AIRPORT
MAIN TERMINAL HVAC REVAMP
5000 JERRY WARE DR.
BEAUMONT, TEXAS

STATE OF TEXAS
MATT A FLUKINGER
119970
LICENSED
PROFESSIONAL ENGINEER

TAS # 08/19/2022

ISSUED FOR
ISSUE FOR PERMIT
08/19/2022

KT, AA
DRAWN BY
MF, SK
CHECKED BY
MF, SK
APPROVED BY

SHEET NUMBER
M2.04
ROOF PLAN

22-413
PROJECT NO.

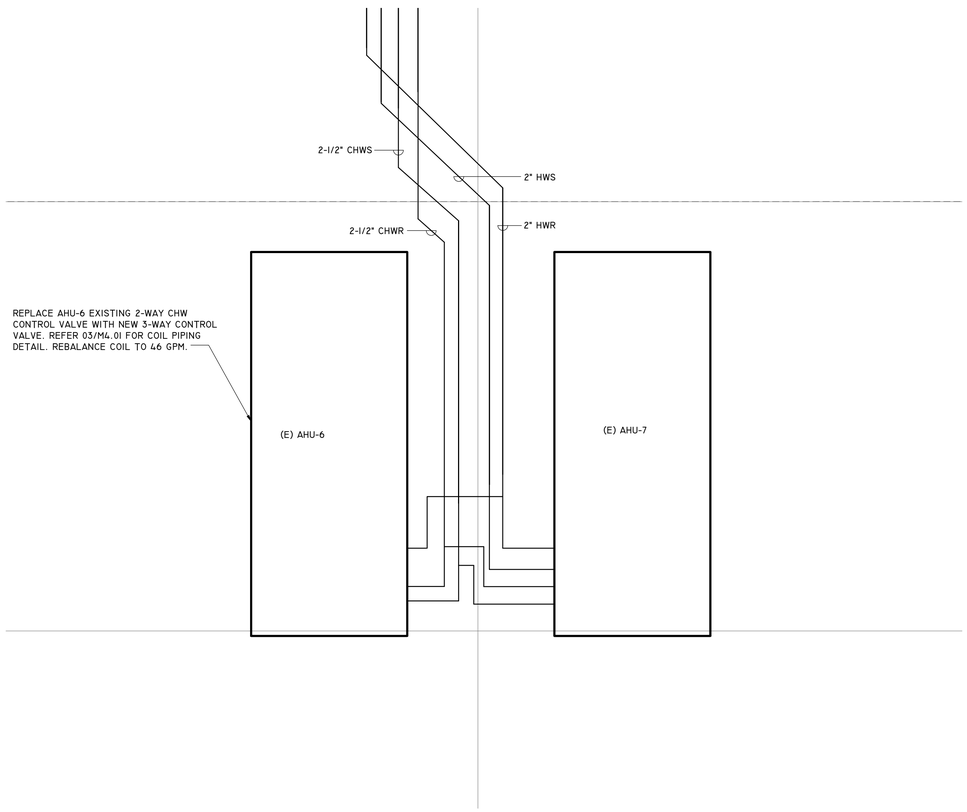

01 ENLARGED CONSTRUCTION PLAN - ROOF - HVAC
SCALE: 1/4"=1'-0"

SIGMAENGINEERS
Innovative Solutions | Solid Designs
4099 Calder Avenue
Beaumont, Texas 77706
Phone (409) 898-1001
www.sigmaengineers.com

JEFFERSON COUNTY REGIONAL AIRPORT
MAIN TERMINAL HVAC REVAMP
5000 JERRY WARE DR.
BEAUMONT, TEXAS

STATE OF TEXAS
MATT A FLUKINGER
119970
LICENSED
PROFESSIONAL ENGINEER
08/19/2022
PAS #:

ISSUED FOR
ISSUE FOR PERMIT
06/19/2022

KT, AA
DRAWN BY
MF, SK
CHECKED BY
MF, SK
APPROVED BY

SHEET NUMBER
M2.05
ROOF PLAN

22-413
PROJECT NO.

Infrastructure Associates
INFRASTRUCTURE ASSOCIATES, INC.
6117 RICHMOND AVENUE, SUITE 200
HOUSTON, TEXAS 77057
TBPE REGISTRATION NO. F-4506
(713) 622-0120 PH (713) 622-0557 FAX
WWW.IAHOUSTON.COM

THESE DRAWINGS ARE INSTRUMENTS OF SERVICE AND ARE THE PROPERTY OF SIGMA ENGINEERS, INC.
ALL DESIGNS AND INFORMATION HEREIN ARE FOR USE ON THE SPECIFIED PROJECT AND SHALL NOT BE USED OTHERWISE WITHOUT THE WRITTEN CONSENT OF SIGMA ENGINEERS, INC.
REGISTRATION # F-003645
COPYRIGHT 2022 BY SIGMA ENGINEERS, INC.
ALL RIGHTS RESERVED

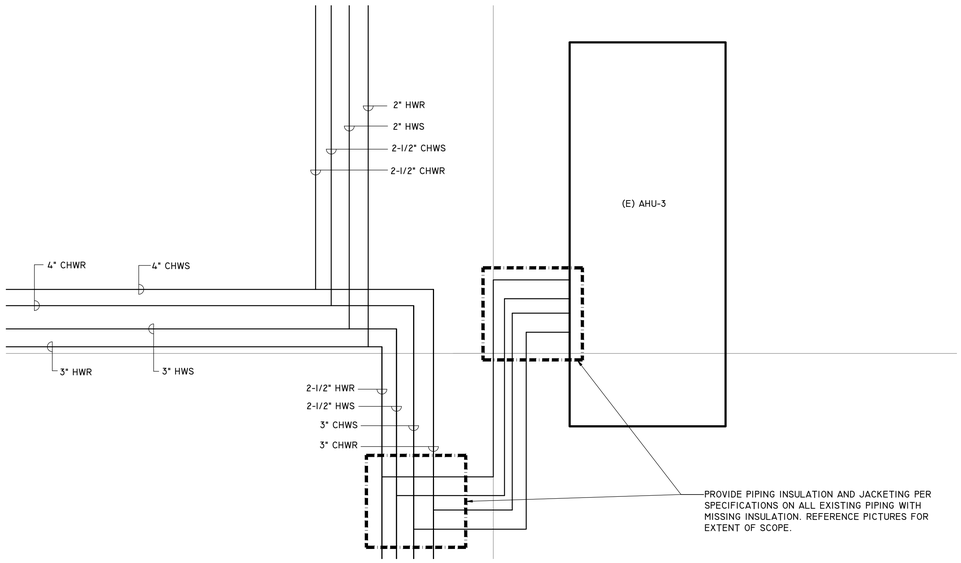

01 ENLARGED CONSTRUCTION PLAN - ROOF - HVAC

SCALE: 1/4"=1'-0"

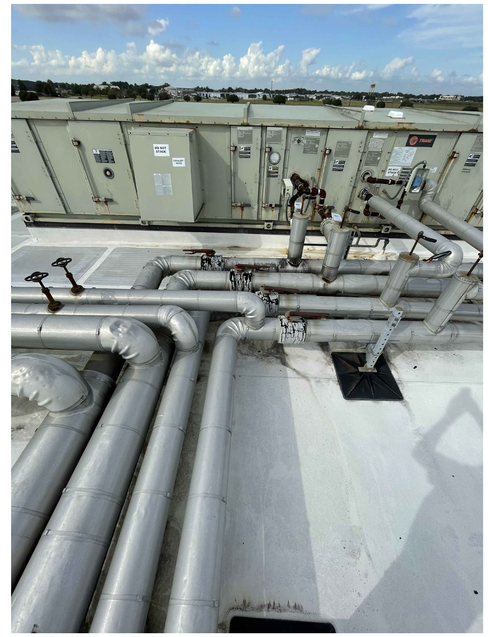

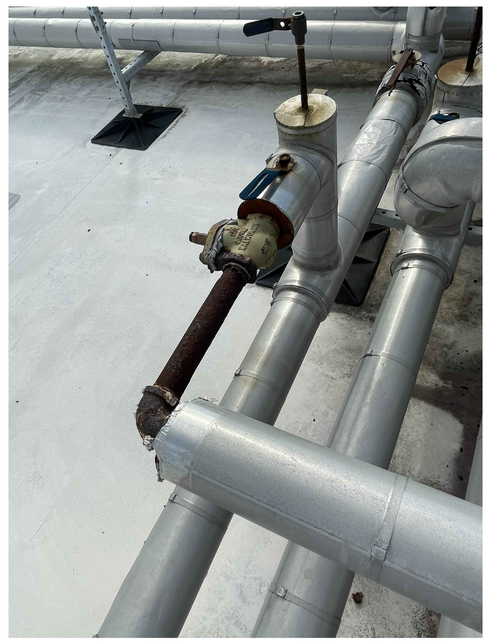

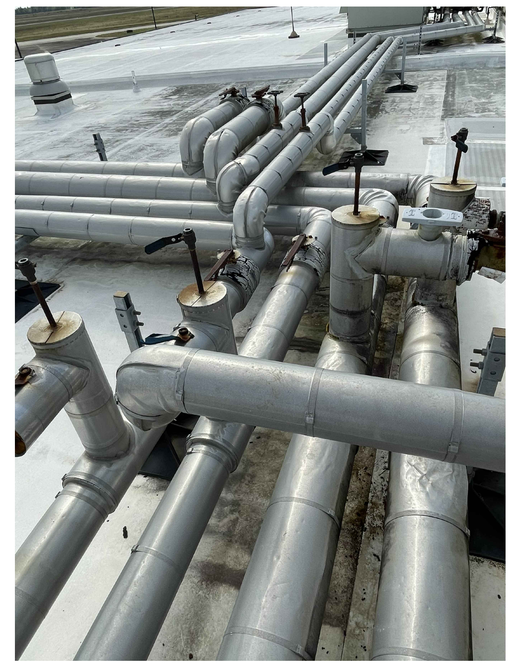

SIGMAENGINEERS
Innovative Solutions | Solid Designs
4099 Calder Avenue
Beaumont, Texas 77706
Phone (409) 898-1001
www.sigmaengineers.com

JEFFERSON COUNTY REGIONAL AIRPORT
MAIN TERMINAL HVAC REVAMP
5000 JERRY WARE DR.
BEAUMONT, TEXAS

STATE OF TEXAS
MATT A FLUKINGER
119970
LICENSED
PROFESSIONAL ENGINEER

08/19/2022

PAS #:

ISSUED FOR
ISSUE FOR PERMIT
08/19/2022

KT, AA
DRAWN BY
MF, SK
CHECKED BY
MF, SK
APPROVED BY

SHEET NUMBER
M2.06A
ROOF PLAN

22-413
PROJECT NO.

Infrastructure Associates
INFRASTRUCTURE ASSOCIATES, INC.
6117 RICHMOND AVENUE, SUITE 200
HOUSTON, TEXAS 77057
TBPE REGISTRATION NO. F-4506
(713) 622-0120 PH (713) 622-0557 FAX
WWW.IAHOUSTON.COM

THESE DRAWINGS ARE INSTRUMENTS OF SERVICE AND ARE THE PROPERTY OF SIGMA ENGINEERS, INC.
ALL DESIGNS AND INFORMATION HEREIN ARE FOR USE ON THE SPECIFIED PROJECT AND SHALL NOT BE USED OTHERWISE WITHOUT THE WRITTEN CONSENT OF SIGMA ENGINEERS, INC.
REGISTRATION # F-003645
COPYRIGHT 2022 BY SIGMA ENGINEERS, INC.
ALL RIGHTS RESERVED

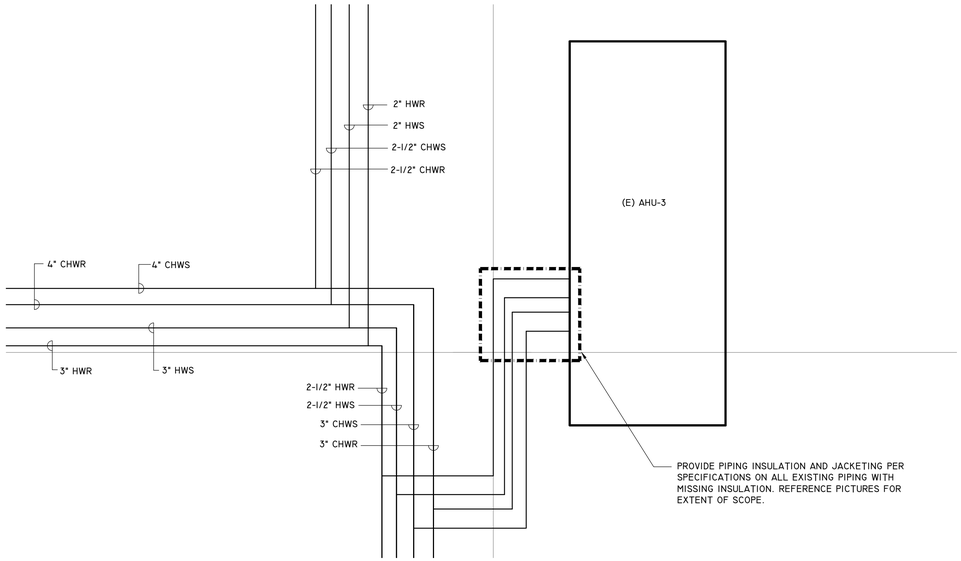

01 ENLARGED CONSTRUCTION PLAN - ROOF - HVAC
SCALE: 1/4"=1'-0"

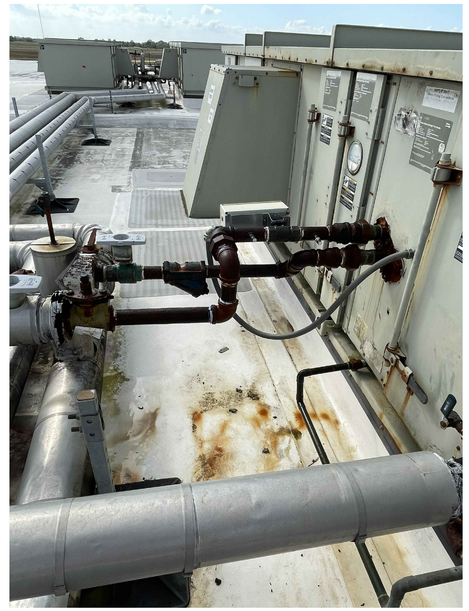

Infrastructure Associates
INFRASTRUCTURE ASSOCIATES, INC.
6117 RICHMOND AVENUE, SUITE 200
HOUSTON, TEXAS 77057
TBPE REGISTRATION NO. F-4506
(713) 622-0120 PH (713) 622-0557 FAX
WWW.IAHOUSTON.COM

THESE DRAWINGS ARE INSTRUMENTS OF SERVICE AND ARE THE PROPERTY OF SIGMA ENGINEERS, INC.
ALL DESIGNS AND INFORMATION HEREIN ARE FOR USE ON THE SPECIFIED PROJECT AND SHALL NOT BE USED OTHERWISE WITHOUT THE WRITTEN CONSENT OF SIGMA ENGINEERS, INC.
REGISTRATION # F-003645
COPYRIGHT 2022 BY SIGMA ENGINEERS, INC.
ALL RIGHTS RESERVED

SIGMAENGINEERS
Innovative Solutions | Solid Designs
4099 Calder Avenue
Beaumont, Texas 77706
Phone (409) 898-1001
www.sigmaengineers.com

JEFFERSON COUNTY REGIONAL AIRPORT
MAIN TERMINAL HVAC REVAMP
5000 JERRY WARE DR.
BEAUMONT, TEXAS

STATE OF TEXAS
MATT A FLUKINGER
119970
LICENSED
PROFESSIONAL ENGINEER
08/19/2022
TAS #:

ISSUED FOR
ISSUE FOR PERMIT
08/19/2022

KT, AA
DRAWN BY
MF, SK
CHECKED BY
MF, SK
APPROVED BY

SHEET NUMBER
M2.06B
ROOF PLAN

22-413
PROJECT NO.

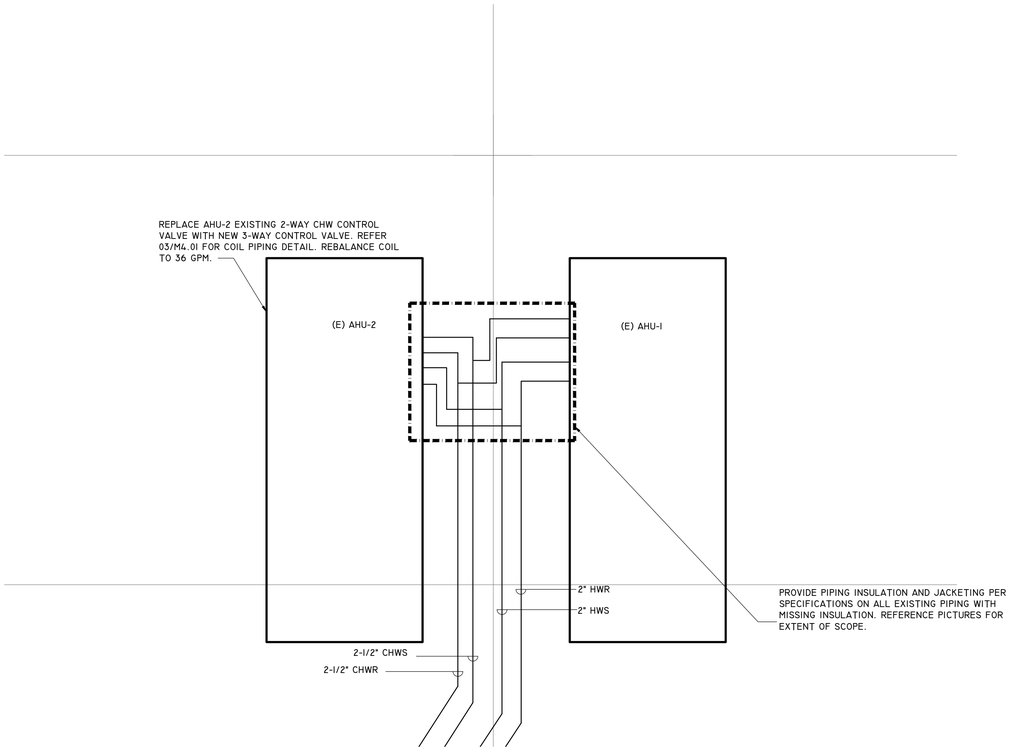

01 ENLARGED CONSTRUCTION PLAN - ROOF - HVAC
SCALE: 1/4"=1'-0"

SIGMAENGINEERS
Innovative Solutions | Solid Designs
4099 Calder Avenue
Beaumont, Texas 77706
Phone (409) 898-1001
www.sigmaengineers.com

JEFFERSON COUNTY REGIONAL AIRPORT
MAIN TERMINAL HVAC REVAMP
5000 JERRY WARE DR.
BEAUMONT, TEXAS

STATE OF TEXAS
MATT A FLUKINGER
119970
LICENSED
PROFESSIONAL ENGINEER
08/19/2022

TAS #:

ISSUED FOR
ISSUE FOR PERMIT
08/19/2022

KT, AA
DRAWN BY
MF, SK
CHECKED BY
MF, SK
APPROVED BY

SHEET NUMBER
M2.07
ROOF PLAN

22-413
PROJECT NO.

Infrastructure Associates
INFRASTRUCTURE ASSOCIATES, INC.
6117 RICHMOND AVENUE, SUITE 200
HOUSTON, TEXAS 77057
TBPE REGISTRATION NO. F-4506
(713) 622-0120 PH (713) 622-0557 FAX
WWW.IAHOUSTON.COM

THESE DRAWINGS ARE INSTRUMENTS OF SERVICE AND ARE THE PROPERTY OF SIGMA ENGINEERS, INC. ALL DESIGNS AND INFORMATION HEREIN ARE FOR USE ON THE SPECIFIED PROJECT AND SHALL NOT BE USED OTHERWISE WITHOUT THE WRITTEN CONSENT OF SIGMA ENGINEERS, INC.
REGISTRATION # F-003645
COPYRIGHT 2022 BY SIGMA ENGINEERS, INC.
ALL RIGHTS RESERVED

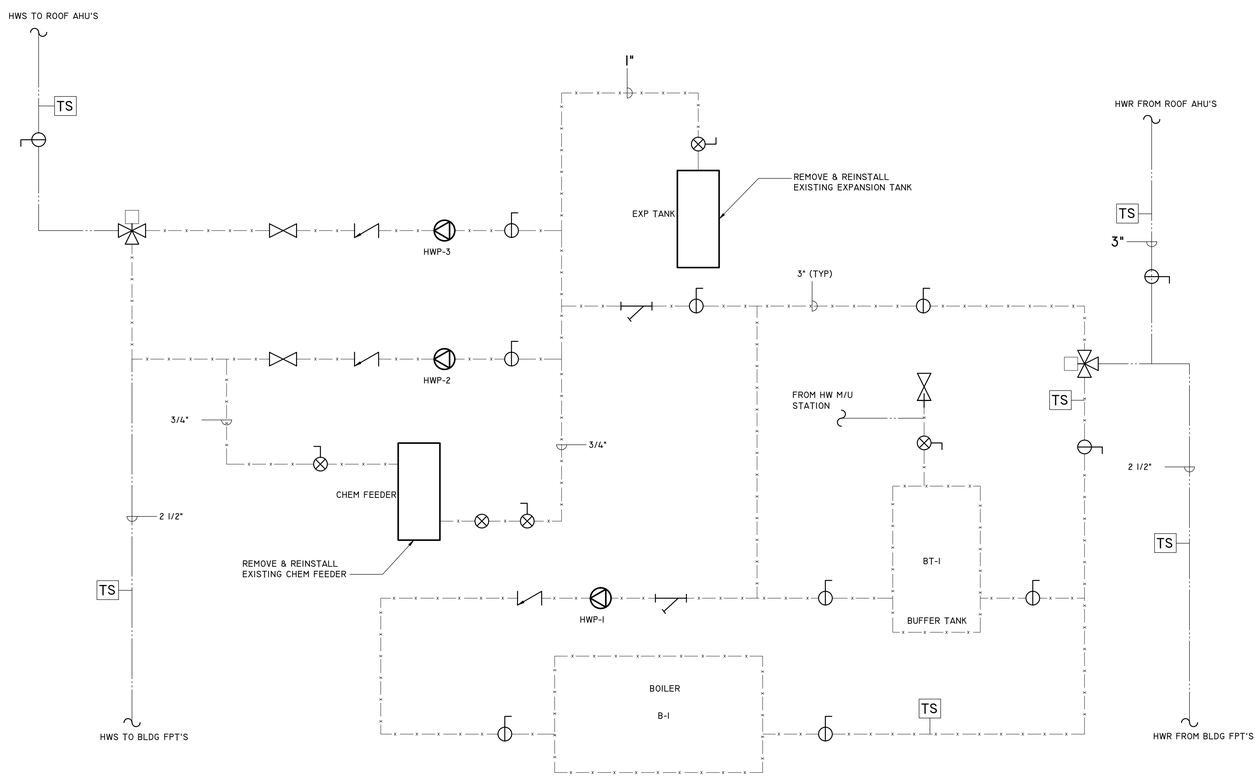

1 BOILER PLANT PIPING DIAGRAM - DEMO
Scale: NTS

SIGMAENGINEERS
Innovative Solutions | Solid Designs
4099 Calder Avenue
Beaumont, Texas 77706
Phone (409) 898-1001
www.sigmaengineers.com

JEFFERSON COUNTY REGIONAL AIRPORT
MAIN TERMINAL HVAC REVAMP
5000 JERRY WARE DR.
BEAUMONT, TEXAS

STATE OF TEXAS
MATT A FLUKINGER
119970
LICENSED
PROFESSIONAL ENGINEER
08/19/2022

TAS #:

ISSUED FOR:
ISSUE FOR PERMIT
08/19/2022

KT, AA
DRAWN BY
MF, SK
CHECKED BY
MF, SK
APPROVED BY

SHEET NUMBER
M3.01
PIPING DIAGRAM – DEMO

22–413
PROJECT NO.

Infrastructure Associates
INFRASTRUCTURE ASSOCIATES, INC.
6117 RICHMOND AVENUE, SUITE 200
HOUSTON, TEXAS 77057
TBPE REGISTRATION NO. F-4506
(713) 622-0120 PH (713) 622-0557 FAX
WWW.IAHOUSTON.COM

THESE DRAWINGS ARE INSTRUMENTS OF SERVICE AND ARE THE PROPERTY OF SIGMA ENGINEERS, INC.
ALL DESIGNS AND INFORMATION HEREIN ARE FOR USE ON THE SPECIFIED PROJECT AND SHALL NOT BE USED OTHERWISE WITHOUT THE WRITTEN CONSENT OF SIGMA ENGINEERS, INC.
REGISTRATION # F-003645
COPYRIGHT 2022 BY SIGMA ENGINEERS, INC.
ALL RIGHTS RESERVED

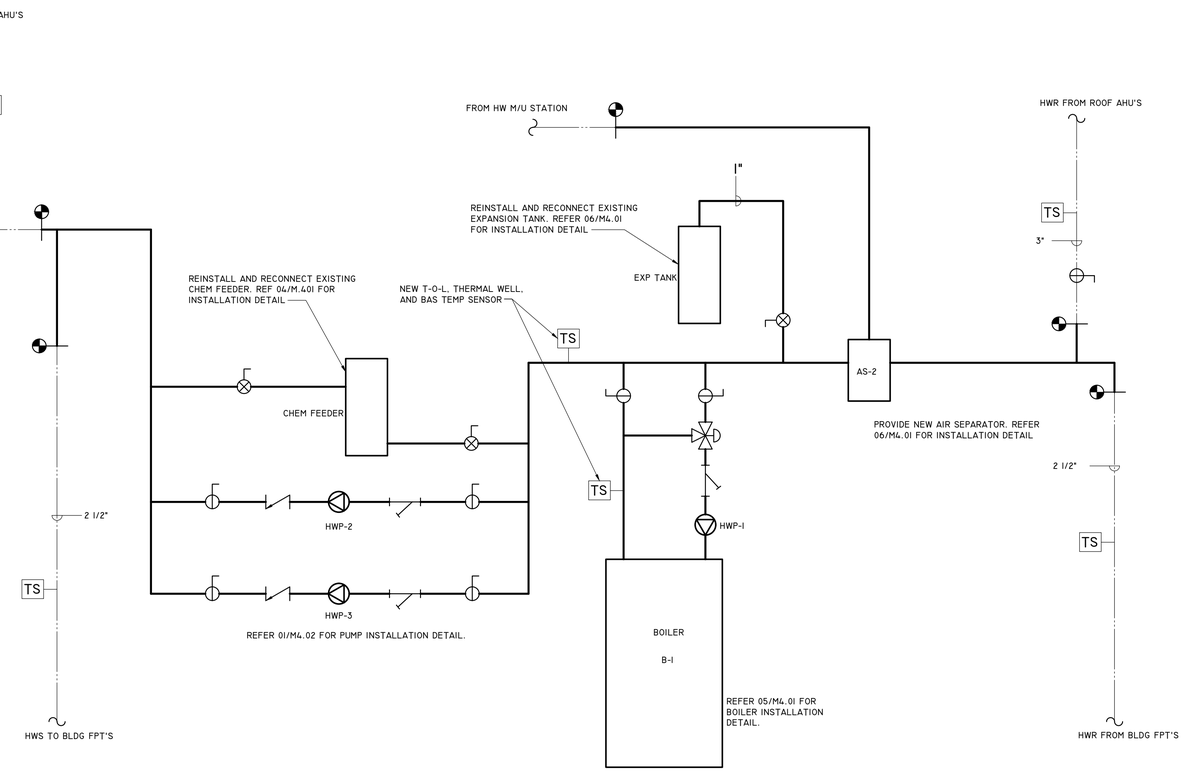

1 BOILER PLANT PIPING DIAGRAM - PROPOSED
Scale: NTS

SIGMAENGINEERS
Innovative Solutions | Solid Designs
4099 Calder Avenue
Beaumont, Texas 77706
Phone (409) 898-1001
www.sigmaengineers.com

JEFFERSON COUNTY REGIONAL AIRPORT
MAIN TERMINAL HVAC REVAMP
5000 JERRY WARE DR.
BEAUMONT, TEXAS

STATE OF TEXAS
MATT A FLUKINGER
119970
LICENSED
PROFESSIONAL ENGINEER
08/19/2022
TAS #:

ISSUED FOR
ISSUE FOR PERMIT
08/19/2022

KT, AA
DRAWN BY
MF, SK
CHECKED BY
MF, SK
APPROVED BY

SHEET NUMBER
M3.02
PIPING DIAGRAM – PROPOSED

22-413
PROJECT NO.

Infrastructure Associates
INFRASTRUCTURE ASSOCIATES, INC.
6117 RICHMOND AVENUE, SUITE 200
HOUSTON, TEXAS 77057
TBPE REGISTRATION NO. F-4506
(713) 622-0120 PH (713) 622-0557 FAX
WWW.IAHOUSTON.COM

THESE DRAWINGS ARE INSTRUMENTS OF SERVICE AND ARE THE PROPERTY OF SIGMA ENGINEERS, INC.
ALL DESIGNS AND INFORMATION HEREIN ARE FOR USE ON THE SPECIFIED PROJECT AND SHALL NOT BE USED OTHERWISE WITHOUT THE WRITTEN CONSENT OF SIGMA ENGINEERS, INC.
REGISTRATION # F-003645
COPYRIGHT 2022 BY SIGMA ENGINEERS, INC.
ALL RIGHTS RESERVED

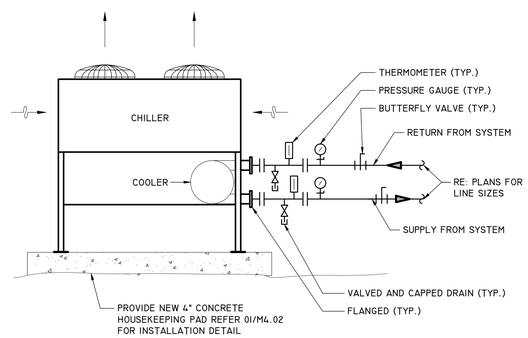

AIR COOLED CHILLER PIPING DETAIL (TYPICAL) | NOT TO SCALE | 8

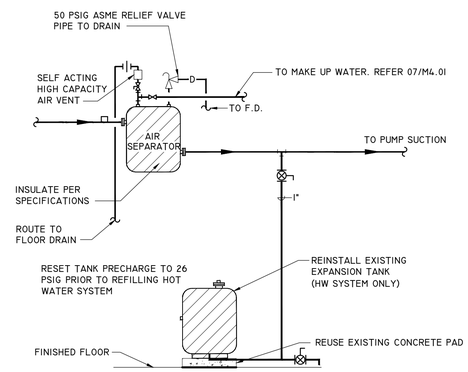

NOTE:

1. AIR SEPARATOR (6" AND SMALLER) SHALL BE IN-LINE SUSPENDED AND SUPPORTED FROM STRUCTURE.
2. AIR SEPARATOR (8" AND LARGER) SHALL BE FLOOR MOUNTED AND SHALL BE INSTALLED ON 6" HIGH CONCRETE PAD.

EXPANSION TANK PIPING DETAIL | NOT TO SCALE | 6

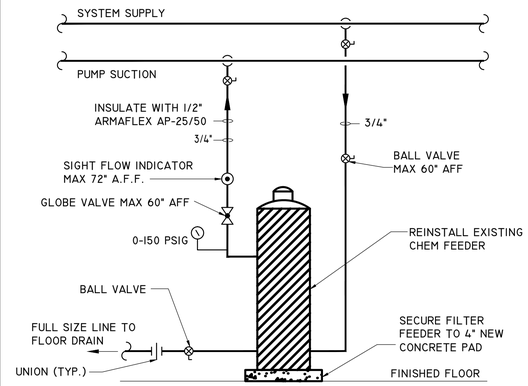

NOTE: INSULATE FILTER FEEDER WITH ALL ASSOCIATED PIPING WITH 1/2" ARMAFLEX AP-25/50

CHEMICAL FILTER FEEDER DETAIL | NOT TO SCALE | 4

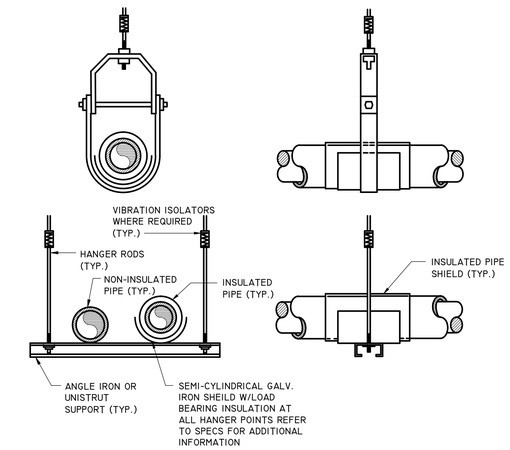

PIPE HANGER DETAIL | NOT TO SCALE | 2

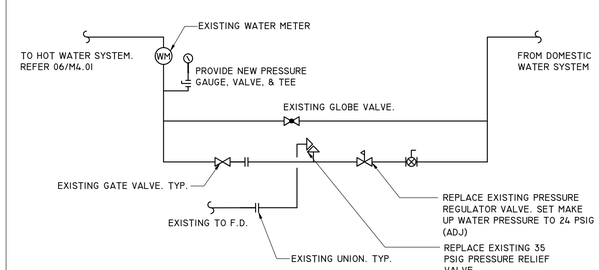

HOT WATER MAKE UP STATION - PROPOSED | NOT TO SCALE | 7

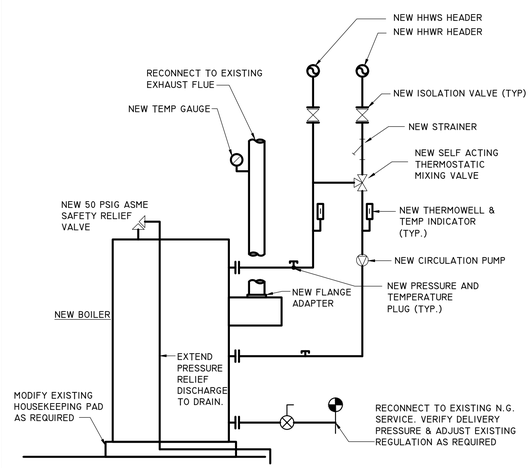

TYPICAL BOILER INSTALLATION DETAIL | NOT TO SCALE | 5

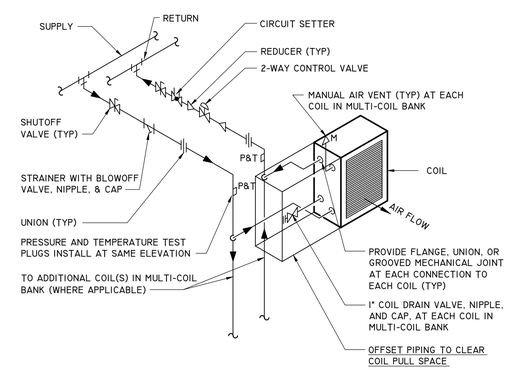

NOTES:

1. SHUT-OFF VALVE SHALL BE BUTTERFLY TYPE FOR 2-1/2" AND LARGER AND BALL VALVE FOR 2" AND SMALLER.
2. PROVIDE DRAIN LINE FOR STRAINER VALVE.
3. CONFIRM T&P PLUGS LOCATIONS WITH TAB CONTRACTOR BEFORE INSTALLATION.

2-WAY COIL PIPING DETAIL | NOT TO SCALE | 3

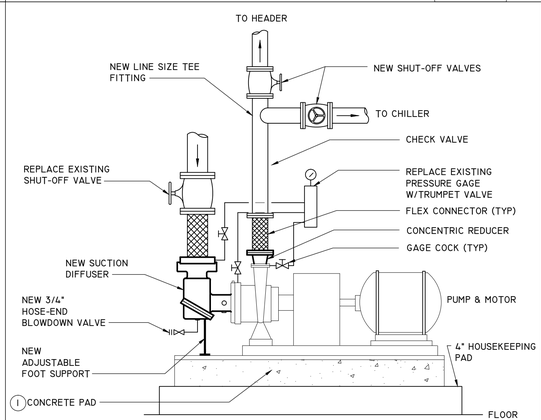

KEYED MECHANICAL NOTES:

1. EXISTING TO REMAIN

CHW PUMP DETAIL | NOT TO SCALE | 1

Infrastructure Associates
INFRASTRUCTURE ASSOCIATES, INC.
6117 RICHMOND AVENUE, SUITE 200
HOUSTON, TEXAS 77057
TBPE REGISTRATION NO. F-4506
(713) 622-0120 PH (713) 622-0557 FAX
WWW.IAHOUSTON.COM

THESE DRAWINGS ARE INSTRUMENTS OF SERVICE AND ARE THE PROPERTY OF SIGMA ENGINEERS, INC.
ALL DESIGNS AND INFORMATION HEREIN ARE FOR USE ON THE SPECIFIED PROJECT AND SHALL NOT BE USED OTHERWISE WITHOUT THE WRITTEN CONSENT OF SIGMA ENGINEERS, INC.
REGISTRATION # F-003645
COPYRIGHT 2022 BY SIGMA ENGINEERS, INC.
ALL RIGHTS RESERVED

SIGMAENGINEERS
Innovative Solutions | Solid Designs
4099 Calder Avenue
Beaumont, Texas 77706
Phone (409) 898-1001
www.sigmaengineers.com

JEFFERSON COUNTY REGIONAL AIRPORT
MAIN TERMINAL HVAC REVAMP
5000 JERRY WARE DR.
BEAUMONT, TEXAS

STATE OF TEXAS
MATT A FLUKINGER
119970
LICENSED
PROFESSIONAL ENGINEER
08/19/2022

TAS #:

ISSUED FOR:
ISSUE FOR PERMIT
08/19/2022

KT, AA
DRAWN BY
MF, SK
CHECKED BY
MF, SK
APPROVED BY

SHEET NUMBER
M4.01
DETAILS

22-413
PROJECT NO.

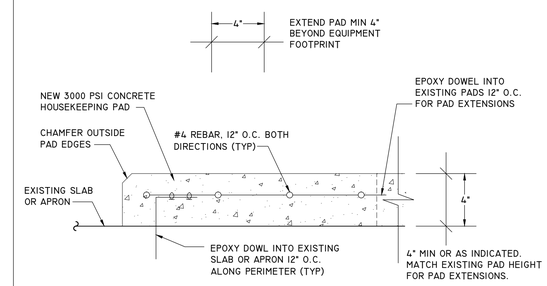

HOUSEKEEPING PAD DETAIL | NOT TO SCALE | 2

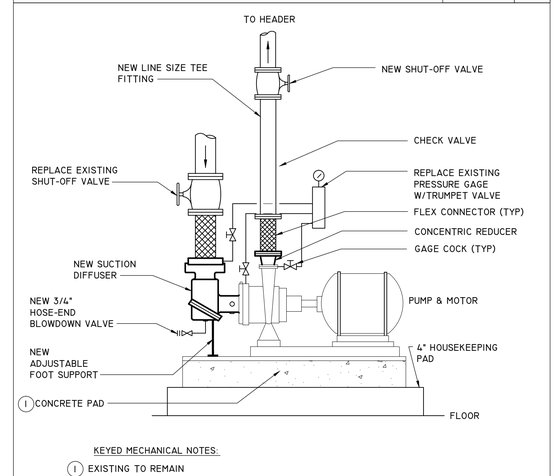

KEYED MECHANICAL NOTES:

1 EXISTING TO REMAIN

HW PUMP DETAIL | NOT TO SCALE | 1

Infrastructure Associates
INFRASTRUCTURE ASSOCIATES, INC.
6117 RICHMOND AVENUE, SUITE 200
HOUSTON, TEXAS 77057
TBPE REGISTRATION NO. F-4506
(713) 622-0120 PH (713) 622-0557 FAX
WWW.IAHOUSTON.COM

THESE DRAWINGS ARE INSTRUMENTS OF SERVICE AND ARE THE PROPERTY OF SIGMA ENGINEERS, INC.
ALL DESIGNS AND INFORMATION HEREIN ARE FOR USE ON THE SPECIFIED PROJECT AND SHALL NOT BE USED OTHERWISE WITHOUT THE WRITTEN CONSENT OF SIGMA ENGINEERS, INC.
REGISTRATION # F-003645
COPYRIGHT 2022 BY SIGMA ENGINEERS, INC.
ALL RIGHTS RESERVED

SIGMAENGINEERS
Innovative Solutions | Solid Designs
4099 Calder Avenue
Beaumont, Texas 77706
Phone (409) 898-1001
www.sigmaengineers.com

JEFFERSON COUNTY REGIONAL AIRPORT
MAIN TERMINAL HVAC REVAMP
5000 JERRY WARE DR.
BEAUMONT, TEXAS

STATE OF TEXAS
MATT A FLUKINGER
119970
LICENSED
PROFESSIONAL ENGINEER
08/19/2022

TAS #:

ISSUED FOR
ISSUE FOR PERMIT
08/19/2022

KT, AA
DRAWN BY
MF, SK
CHECKED BY
MF, SK
APPROVED BY

SHEET NUMBER
M4.02
DETAILS

22-413
PROJECT NO.

ELECTRICAL SYMBOL LEGEND

SYMBOL	DESCRIPTION
HA-1,3,5	HOME RUN TO PANEL HA, CIRCUITS 1, 3, 5 USING 3#12 (H), 3#12 (N), 1#12 (G), 3/4" C (UNLESS OTHERWISE NOTED) EACH CIRCUIT WILL HAVE ITS OWN NEUTRAL
XX	ROUND LED LUMINAIRE RECESSED OR SUSPENDED FROM ABOVE XX = TYPE ON LUMINAIRE SCHEDULE
XX	ROUND LED LUMINAIRE SUSPENDED FROM SIDE ARM XX = TYPE ON LUMINAIRE SCHEDULE
XX	LINEAR LED LUMINAIRE RECESSED OR SUSPENDED FROM ABOVE XX = TYPE ON LUMINAIRE SCHEDULE
XX	LINEAR LED WITH EMERGENCY EGRESS OPERATION RECESSED OR SUSPENDED FROM ABOVE XX = TYPE ON LUMINAIRE SCHEDULE
X1 X2	EXIT SIGN WITH DIRECTIONAL ARROWS AS INDICATED, 1 OR 2 FACE PENDANT MOUNTED FROM ABOVE X1 OR X2 = TYPE ON LUMINAIRE SCHEDULE
XX	EMERGENCY EGRESS ONLY LUMINAIRE SURFACE MOUNTED FROM BACK XX = TYPE ON LUMINAIRE SCHEDULE
	NEMA 5-20R DUPLEX RECEPTACLE, MOUNTED 18" AFF (UON) WP = WEATHER PROOF, GFI = GFCI PROTECTED, IG = ISOLATED GROUND PROVIDE WITH STAINLESS STEEL COVERPLATE AND CIRCUIT NUMBER
	NEMA 5-20R QUADRAPLEX RECEPTACLE, MOUNTED 18" AFF (UON) WP = WEATHER PROOF, GFI = GFCI PROTECTED, IG = ISOLATED GROUND PROVIDE WITH STAINLESS STEEL COVERPLATE AND CIRCUIT NUMBER
L6-30R	SIMPLEX RECEPTACLE, MOUNTED 18" AFF (UON) WITH INDICATED CONFIGURATION (E.G. L6-30R = NEMA TWISTLOCK, 250 VAC, 30 A) PROVIDE WITH STAINLESS STEEL COVERPLATE AND CIRCUIT NUMBER
	FLUSH FLOOR BOX WITH WIRING DEVICES AS INDICATED ON PLANS
J	JUNCTION BOX
$XX	LIGHT SWITCH RATED 120/277 VAC, MOUNTED 42" AFF (UON), SINGLE-POLE (UON) 2 = 2-POLE, 3 = 3-WAY, 4 = 4-WAY, D = DIMMER, M = MOTOR-RATED W/ OL, WP = WEATHER PROOF, OS = INTEGRAL OCCUPANCY SENSOR, R = RED COLOR, K = KEYED (MODIFIERS MAY BE COMBINED, E.G. D3 = 3-WAY DIMMER)
OS OS	CEILING OR WALL MOUNTED OCCUPANCY SENSOR LIGHTING CONTROL WITH PASSIVE INFRARED AND ULTRASOUND DUAL TECHNOLOGY, 20 A RATED
TV	TV OUTLET 1-GANG BACKBOX, +42" AFF (UON), SS-302 COVER 1" C WITH MEASURED PULL STRING ROUTED IN CONDUITS BACK TO SERVER ROOM DEVICES AND LOW-VOLTAGE CABLING BY TELECOM CONTRACTOR
W	WALL TELEPHONE OUTLET 1-GANG BACKBOX, +42" AFF (UON), SS-302 COVER 1" C WITH MEASURED PULL STRING ROUTED IN CONDUITS BACK TO SERVER ROOM DEVICES AND LOW-VOLTAGE CABLING BY TELECOM CONTRACTOR
XX	COMBINATION DATA/VOICE (CAT 6E CABLE) OUTLET 2-GANG BACKBOX, SS-302 COVER 1" C WITH MEASURED PULL STRING ROUTED IN CONDUITS BACK TO SERVER ROOM. DEVICES AND LOW-VOLTAGE CABLING BY TELECOM CONTRACTOR. XX - DENOTES NUMBER OF CAT6E CABLES
	MULTIOUTLET ASSEMBLY (PLUG MOLD) AS SPECIFIED ON PLANS, WITH DEVICE TYPES AND QUANTITIES INDICATED ON PLANS
EPO	EMERGENCY POWER OFF, MUSHROOM HEAD, MAINTAINED CONTACT PUSH BUTTON
PC	PHOTOELECTRIC SENSOR AIMED NORTH
TC	TIME CLOCK, ASTRONOMIC/MULTI-POLE CONTACTOR
M	POWER COMPANY POWER METER
HA	LIGHTING CLASS PANEL HA = PANEL NAME CHARACTERISTICS AS INDICATED ON ONE LINE DIAGRAM AND PANEL SCHEDULE
DA	DISTRIBUTION CLASS PANEL DA = PANEL NAME CHARACTERISTICS AS INDICATED ON ONE LINE DIAGRAM
	CONDUIT TURNING UP CONDUIT TURNING DOWN
OH	WEATHER HEAD FOR CONNECTING OVER HEAD CONDUCTORS
	20" Cu CHATWORTH GROUNDING BUSBAR 40153-020 TMGB PATTERN, 4" W x 1/4" H, 20"L, INSULATED STANDOFFS, PRE-DRILLED & TAP AS REQUIRED FOR CONDUCTORS
VFD	VARIABLE FREQUENCY DRIVE WITH INTEGRAL DISCONNECTING MEANS, VFCI
LC CHA 24 COIL 277 VAC 30 AS 12 P NEMA-1	LIGHTING CONTACTOR CHA = CONTACTOR NAME, COIL = COIL CONTROL VOLTAGE, VAC = VOLTAGE RATING, AS = CURRENT RATINGS, P = POLE COUNT, NEMA- = ENCLOSURE TYPE
240 VAC 60 AF 60 AT 3 P NEMA-1 CB	CIRCUIT BREAKER VAC = VOLTAGE RATING, AF = FRAME SIZE, AT = TRIP SETTING, P = POLE COUNT, NEMA- = ENCLOSURE TYPE (WHEN APPLICABLE) MOLDED-CASE, THERMO-MAGNETIC (UON)
240 VAC 60 AS 60 AF 3 P NEMA-1	DISCONNECT SWITCH VAC = VOLTAGE RATING, AS = SWITCH CURRENT RATING, AF = FUSE SIZE/TYPE (E.G. DETD), P = POLE COUNT, NEMA- = ENCLOSURE TYPE (WHEN APPLICABLE)
240 VAC 60 AF 40 AT NEMA-#1 3 P NEMA-1 HOA	COMBINATION CIRCUIT BREAKER, MOTOR CONTROLLER, AND THERMAL OVERLOAD VAC = VOLTAGE RATING, AF = FRAME SIZE, AT = TRIP SETTING, NEMA-# = MOTOR STARTER SIZE/TYPE (E.G. FVNR), HOA = SELECTOR SWITCH TYPE P = POLE COUNT, NEMA- = ENCLOSURE TYPE (WHEN APPLICABLE)
TLA DRY-TYPE 480Δ : 208Y/120 VAC 45 kVA NEMA-2	TRANSFORMER TLA = TRANSFORMER NAME -TYPE = TRANSFORMER TYPE (E.G. DRY-TYPE, HARMONIC-MITIGATING...) VAC = WINDING VOLTAGES (PRIMARY : SECONDARY), kVA = CONTINUOUS CAPACITY, TAPS = QUANTITY/DEVIATION OF TAPS, RISE = TEMP RISE, INSUL = INSULATION CLASS -WOUND = WINDING MATERIAL/CONFIGURATION, NEMA- = ENCLOSURE TYPE

ABBREVIATION DEFINITIONS

2S1W	TWO-SPEED, ONE-WINDING MOTOR
2S2W	TWO-SPEED, TWO-WINDING MOTOR
(A)	ABANDONED TO REMOVE
A	PHASE "A" IN THREE-PHASE SYSTEM
AER	ARC FLASH REDUCTION
AF	AMPERE FUSE OR FRAME RATING
AFCI	ARC FAULT CIRCUIT INTERRUPTER
AFF	ABOVE FINISHED FLOOR
AT	AMPERE TRIP SETTING
AFG	ABOVE FINISHED GRADE
B	PHASE "B" IN THREE-PHASE SYSTEM
BF	BALLAST FACTOR
BFC	BELOW FINISHED CEILING
BFF	BELOW FINISHED FLOOR
BFG	BELOW FINISHED GRADE
C	PHASE "C" IN THREE-PHASE SYSTEM
C	CONDUIT
CB	CIRCUIT BREAKER
CH	CONSTANT HORSE POWER (2S1W MOTOR)
CKT	CIRCUIT
CS	COMBINATION STARTER (MOTOR STARTER / DISCONNECT)
CT	CONSTANT TORQUE (2S1W MOTOR)
CT	CURRENT TRANSFORMER
(D)	EXISTING TO BE DEMOLISHED OR REMOVED
DETD	DUAL ELEMENT, TIME DELAY
DS	DISCONNECT SWITCH
(E)	EXISTING TO REMAIN
EMT	ELECTRICAL METALLIC TUBING
EPM	ELECTRONIC POWER METER
FAAP	FIRE ALARM ANNUNCIATOR PANEL
FACP	FIRE ALARM CONTROL PANEL
FVNR	FULL VOLTAGE NON-REVERSING
G	GROUND
GEC	GROUNDING ELECTRODE CONDUCTOR
GFI	GROUND FAULT CIRCUIT INTERRUPTER
HMT	HARMONIC-MITIGATING TRANSFORMER
HOA	HAND / OFF / AUTO SWITCH (FOR FVNR CONTACTOR)
HLOA	HIGH / LOW / OFF / AUTO (FOR 2S1W OR 2S2W CONTACTOR)
IG	ISOLATED GROUND
J/R	JAMMING RATIO
kAIC	KILO AMPERE INTERRUPTING CAPACITY
KCMIL	KILO CIRCULAR MILS
kVA	KILO VOLT AMPERES COMPLEX OR APPARENT POWER
kVAR	KILO VOLT AMPERES REACTIVE POWER
kW	KILO WATT REAL POWER
L1	HOT LEG 1 IN SINGLE-PHASE SYSTEM < 250 VAC
L2	HOT LEG 2 IN SINGLE-PHASE SYSTEM < 250 VAC
LSI+G	LONG TERM, SHORT TERM, INSTANTANEOUS, AND GROUND-FAULT
MCB	MAIN CIRCUIT BREAKER
MCC	MOTOR CONTROL CENTER
MLO	MAIN LUGS ONLY
(N)	NEW
N	NEUTRAL
NEC	NATIONAL ELECTRICAL CODE (NFPA 70)
NEMA	NATIONAL ELECTRICAL MANUFACTURERS ASSOCIATION
NF	NON-FUSIBLE
NFPA	NATIONAL FIRE PROTECTION ASSOCIATION
NSL	NON-SWITCHED HOT LEG
OFCI	OWNER FURNISHED, CONTRACTOR INSTALLED
OS	OCCUPANCY SENSOR
P	POLES
PF	POWER FACTOR
PFCC	POWER FACTOR CORRECTION CAPACITOR
PVC	POLY VINYL CHLORIDE
PT	POTENTIAL TRANSFORMER
RAL	RIGID ALUMINUM
RGS	RIGID GALVANIZED STEEL
SEC	SECTION OF LIGHTING-CLASS PANEL
SPD	SURGE PROTECTION DEVICE
SS-xxx	STAINLESS STEEL, "xxx" = AUSTENITIC ALLOY TYPE (E.G. 304)
ST	SHUNT-TRIP FOR CIRCUIT BREAKER
THD	TOTAL HARMONIC DISTORTION
TVSS	TRANSIENT VOLTAGE SURGE SUPPRESSION
TYP	TYPICAL
UON	UNLESS OTHERWISE NOTED
V	VOLTS
VAC	VOLTS, ALTERNATING CURRENT
VDC	VOLTS, DIRECT CURRENT
VFCI	VENDOR FURNISHED, CONTRACTOR INSTALLED
VFD	VARIABLE FREQUENCY DRIVE
VT	VARIABLE TORQUE (2S1W MOTOR)
W	WIRES, NOT INCLUDING GEC
WP	WEATHER PROOF
#	AMERICAN WIRE GAGE
Ø	PHASE
μF	MICRO FARAD
Ω	OHMS

GENERAL NOTES:

1. SYMBOL LEGEND MAY CONTAIN SYMBOLS THAT ARE NOT USED ON ALL DRAWINGS.
2. ABBREVIATION DEFINITIONS ARE NOT COMPREHENSIVE, AND NOT ALL ABBREVIATIONS MAY APPLY TO ALL DRAWINGS. SUBMIT FORMAL REQUEST FOR INFORMATION WHEN ENCOUNTERING CONFLICTS OR AMBIGUOUS SYMBOLS OR ABBREVIATIONS, AS THESE WILL NOT CONSTITUTE DISMISSAL OF CONTRACTOR RESPONSIBILITY.
3. ALL COVER PLATES FOR RECEPTACLES, SWITCHES, AND DATA SHALL BE SS-302 (UON).
4. PROVIDE DECORA STYLE SWITCHES FOR LIGHT SWITCHES THAT ARE NOT OCCUPANCY SENSOR TYPE.

ELECTRICAL GENERAL NOTES AND SPECIFICATIONS

(BOOKS SPECIFICATIONS SUPERCEDE ANY NOTES BELOW)

1. SCOPE: THIS DIVISION SHALL INCLUDE ALL EQUIPMENT, MATERIALS, AND LABOR REQUIRED FOR COMPLETE INSTALLATION OF THE ELECTRICAL SYSTEM. PROJECT INCLUDES INSTALLATION OF NEW ELECTRICAL DISTRIBUTION SYSTEM, HVAC SYSTEM CONNECTIONS, NEW LIGHTING SYSTEM, NEW RECEPTACLES AND OUTLETS, FIRE ALARM AND NOTIFICATION SYSTEM, AND OTHER ELECTRICAL WORK AS INDICATED ON THE PLANS. CONTRACTOR SHALL PROVIDE CONDUITS, CONDUCTORS FOR POWER, CONTROLS, AND LIGHTING, LIGHTING CONTACTOR AND CONTACT CLOSURES, AND ALL REQUIRED APPARATUS REQUIRED FOR FULL OPERATION OF THE ELECTRICAL SYSTEM.
2. SITE VISIT AND FAMILIARIZATION: CONTRACTORS PROPOSING TO UNDERTAKE WORK UNDER THIS DIVISION SHALL VISIT THE SITE OF THE WORK, AND FULLY INFORM THEMSELVES OF ALL CONDITIONS THAT AFFECT THE WORK, OR COST THEREOF. CONTRACTOR SHALL EXAMINE THE DRAWINGS AND SPECIFICATIONS AS RELATED TO THE SITE CONDITIONS. ANY DISCREPANCY SHALL BE REPORTED TO THE ENGINEER.
3. NOTICE: CONSIDERATION WILL NOT BE GRANTED FOR ANY ALLEGED MISUNDERSTANDING OF THE AMOUNT OF WORK TO BE PERFORMED. TENDER OF A PROPOSAL SHALL CONVEY FULL AGREEMENT TO ALL ITEMS AND CONDITIONS SPECIFIED, INDICATED ON THE DRAWINGS, AND/OR REQUIRED BY NATURE OF THE SITE.
4. DISCREPANCIES: SHOULD CONTRACTOR FIND DISCREPANCIES OR OMISSIONS IN THE CONTRACT DOCUMENTS, OR BE IN DOUBT AS TO THE INTENT THEREOF, HE SHALL IMMEDIATELY OBTAIN CLARIFICATION FROM THE ARCHITECT BEFORE SUBMITTING PROPOSAL FOR WORK IN THIS DIVISION.
5. DEMOLITION: ALL ELECTRICAL COMPONENTS OF THE EXISTING SYSTEM WHICH ARE NOT UTILIZED FOR NEW CONFIGURATION SHALL BE REMOVED AND DISPOSED OF BY CONTRACTOR. REFER TO DEMOLITION NOTES AND DRAWINGS FOR EXTENT OF WORK.
6. TIMELY PLACING OF MATERIALS AND EQUIPMENT: ALL ELECTRICAL APPARATUS SHALL BE INSTALLED AT THE PROPER TIME DURING PROGRESS OF CONSTRUCTION. COORDINATE WORK OPERATIONS WITH OTHER CRAFTS.
7. SPACE REQUIREMENTS: CONTRACTOR FOR WORK UNDER THIS DIVISION SHALL BE FULLY RESPONSIBLE FOR DETERMINING IN ADVANCE OF PURCHASE THAT EQUIPMENT AND MATERIALS PROPOSED FOR INSTALLATION SHALL FIT INTO THE CONFINES INDICATED.
8. MANUFACTURERS' LITERATURE: DELIVER ALL PRINTED TAGS, INSTRUCTIONS, CERTIFIED DRAWINGS, PARTS LISTED, CERTIFICATES, ETC., SUPPLIED WITH EQUIPMENT ITEMS, TO THE OWNER.
9. CODES, PERMITS, AND FEES: WORK UNDER THIS DIVISION SHALL BE CONSTRUCTED IN STRICT CONFORMANCE WITH PERTINENT PROVISIONS OF CITY AND STATE BUILDING CODES.
   A. ALL WORK SHALL COMPLY WITH THE 2020 EDITION OF NATIONAL ELECTRIC CODE (NEC).
   B. OBTAIN ALL REQUIRED PERMITS. PAY ALL LEGAL FEES FOR PERMITS AND INSPECTIONS BY AUTHORITIES HAVING JURISDICTION.
   C. ALL WORK SHALL COMPLY WITH REQUIREMENTS OF CITY OF PORT ARTHUR, TEXAS.
10. CUTTING AND PATCHING:
    A. CONTRACTOR FOR THIS DIVISION SHALL LAYOUT TO DIMENSION AND LOCATIONS, CUT AND PATCH ALL OPENINGS ON SURFACES TO BE FORMED, FRAMED, OR CUT.
    B. SHOULD CONTRACTOR FOR THIS DIVISION FAIL TO ADHERE WITH THIS REQUIREMENT, AS WORK PROGRESSES, ANY OPENINGS SHALL BE CUT AND PATCHED BY GENERAL CONTRACTOR AT THE EXPENSE OF THIS CONTRACTOR FOR THIS DIVISION.
11. PROTECTION OF APPARATUS: TAKE ALL PRECAUTIONS NECESSARY FOR PROPER PROTECTION OF NEW EQUIPMENT, APPARATUS, AND MATERIALS FROM DAMAGE. FAILURE TO DO SO WILL BE CAUSE FOR REJECTION OF ANY ITEM COMING UNDER QUESTION.
12. SHOP DRAWINGS: CONTRACTOR FOR THIS DIVISION SHALL SUBMIT SHOP DRAWINGS AND CATALOGUE DATA ON ALL MAJOR ITEMS OF EQUIPMENT AND SYSTEMS AND OTHER MATERIAL REQUESTED BY ARCHITECT/ENGINEER. SUBMIT PRODUCT DATA FOR SWITCHBOARDS, PANELBOARDS, TRANSFORMERS, WIRES, CABLE, SUPPORTING DEVICES, IDENTIFICATION COMPONENTS, LIGHT FIXTURES, FIRE ALARM SYSTEM AND COMPONENTS, WIRING DEVICES, MULTI-OUTLET RACEWAYS, CABINETS, AND BOXES. SUBMIT SIX COPIES WITHIN THIRTY (30) DAYS AFTER CONTRACT AWARD, AND IN NOT MORE THAN TWO GROUPS OF SUBMITTALS. SUBMITTALS SHALL CONSIST OF LAYOUTS, WORKING DRAWINGS, CUTS, AND OPERATING AND PERFORMANCE DATA. ALLOW FOUR (4) WEEKS FOR REVIEW AND APPROVAL OF THE SHOP DRAWINGS BY ENGINEER.
13. MATERIALS AND WORKMANSHIP: ALL MATERIALS AND EQUIPMENT SHALL BE NEW, OF BEST GRADE OF STANDARD MANUFACTURE. APPROVED BY UL, AND BE SO LABELED. FOR WIRE AND CABLE, MARKED AS REQUIRED BY ART. 310-2, NEC. INSTALLED BY SKILLED ELECTRICIAN, WORKING UNDER THE DIRECT SUPERVISION OF COMPETENT EXPERIENCED FOREMAN AND/OR SUPERINTENDENT. PRODUCTS SHALL BE INSTALLED IN A THOROUGH WORKMANLIKE MANNER, PRESENTING A NEAT, CLEAN-CUT APPEARANCE WHEN COMPLETED. ANY PART OR PARTS NOT MEETING THIS REQUIREMENT SHALL BE REPLACED OR REBUILT WITHOUT EXTRA EXPENSE TO OWNER.
14. PROTECTION OF EXISTING: PLENUM CABLE SHALL BE PROPERLY SECURED ABOVE CEILING PER APPLICABLE CODES.
15. WIRING METHODS: THE DRAWINGS ARE DIAGRAMMATIC AND ARE INTENDED TO SHOW THE LOCATIONS OF EQUIPMENT AND ARRANGEMENT OF CIRCUITS ONLY. EXACT LOCATIONS SHALL BE DETERMINED BY ACTUAL MEASUREMENT AT THE SITE. CONTRACTOR SHALL BE FULLY RESPONSIBLE FOR ALL RISES, DROPS, OFFSETS, ETC. NECESSARY TO AVOID CONFLICT WITH STRUCTURAL MEMBERS, AND SIMILAR ITEMS, WHEN INSTALLING ELECTRICAL CONDUITS. INSTALL EXPOSED CONDUIT AS SHOWN OR NOTED, PARALLEL TO HORIZONTAL AND VERTICAL LINES OF STRUCTURES. MAKE BENDS WITH 90 DEGREE TURN ONLY, OR WITH APPROVED FITTINGS.
16. CONDUIT: FURNISH A COMPLETE RACEWAY SYSTEM FOR BUT NOT LIMITED TO FEEDER, BRANCH CIRCUITS, CONTROL WIRING, AND AUXILIARY SYSTEM WIRING.
    A. USE LIQUID TIGHT FLEXIBLE METAL CONDUIT AND FITTINGS FOR ALL MOTORIZED CONNECTIONS, WHERE EQUIPMENT IS SUBJECT TO MOVEMENT, OR LOCATED OUTDOOR.
    B. WHERE ENTERING PANELS, PULL BOXES, J-BOXES, OR OUTLET BOXES, SECURED IN PLACE WITH WITH LOCK-NUTS INSIDE AND OUTSIDE, AND INSULATED BUSHING INSIDE.
    C. BENDS AND OFFSETS MADE WITH APPROVED TOOLS ONLY. BENDS OR OFFSETS IN WHICH THE PIPE IS CRUSHED OR DEFORMED SHALL NOT BE INSTALLED.
    D. USE EMT FOR INTERIOR DRY LOCATIONS, PVC FOR UNDERGROUND INSTALLATION, AND RIGID GALVANIZED STEEL FOR EXPOSED LOCATIONS SUBJECT TO DAMAGE.
17. OUTLET AND JUNCTION BOXES: FURNISH AND INSTALL ALL JUNCTION BOXES REQUIRED TO FACILITATE INSTALLATION OF THE VARIOUS CONDUIT SYSTEMS. JUNCTION BOXES SHALL BE SUITABLE FOR ENVIRONMENT AND APPLICATION USED FOR.
18. WIRE AND CABLE: ALL WIRE AND CABLE SHALL:
    A. BE NEW AND OF SOFT DRAWN, ANNEALED, COPPER HAVING A CONDUCTIVITY OF NOT LESS THAN 98% OF THAT OF PURE COPPER; EACH WIRE CONTINUOUS WITHOUT WELD, SPLICE OR JOINT THROUGHOUT ITS LENGTH; UNIFORM IN CROSS SECTION AND FREE FROM FLAWS, SCALES, AND OTHER IMPERFECTIONS.
    B. UNLESS OTHERWISE SPECIFIED OR NOTED, WIRES SHALL BE #12 AWG (FOR PHASE, NEUTRAL, AND GROUND CONDUCTORS) TYPE THW, THWN, THHN, AS MANUFACTURED BY TRIANGLE, GENERAL ELECTRIC, OKONITE, OR ANACONDA.
    C. ALL WIRE #8 AND LARGER SHALL BE STRANDED.
    D. NOT BE DRAWN INTO A CONDUIT UNTIL ALL WORK WHICH MAY CAUSE INJURY TO INSULATION IS COMPLETE. WHERE TWO OR MORE CIRCUITS RUN TO A SINGLE OUTLET BOX, TAG EACH CIRCUIT AS A GUIDE.
    E. HAVE ALL STRANDED CONDUCTORS FURNISHED WITH COPPER CONNECTING LUGS, DRILLED, OR REAMED THE FULL DIAMETER OF THE BARE CONDUCTORS. MAINS AND FEEDERS SHALL BE RUN THEIR ENTIRE LENGTH IN CONTINUOUS PIECES WITHOUT JOINTS OR SPLICES.
19. IDENTIFICATION OF CONDUCTORS AND PANELBOARD ELEMENTS:
    A. EACH AND EVERY MAIN AND FEEDER CONDUCTOR SHALL BE IDENTIFIED AT EACH OUTLET POINT WHERE SUCH CONDUCTOR TERMINATES. FEEDER BUNDLES PASSING THROUGH A JUNCTION OR SUPPORT BOX SHALL ALSO BE IDENTIFIED WITHIN SUCH ENCLOSURE, BUT MAY BE IDENTIFIED IN SUCH LOCATIONS AS A GROUP.
    B. IDENTIFY BY USE OF PERMANENT TYPE BANDS, BRADY, OR T AND B. A DEFINITE NUMBER AND/OR LETTER CODE SHALL BE EMPLOYED AND BE UNIFORM THROUGHOUT EACH CONDUCTOR.
    C. IDENTIFY EACH SWITCH, INCLUDING MAIN DISCONNECT AND MOTOR STARTER WITH WHITE-ON-BLACK NAMEPLATE, EACH HAVING 1/4" HIGH LETTERS. NEATLY AND SECURELY ADHERE NAMEPLATES TO THE UNIT.
    D. ALL CONDUCTORS TO BE FULLY COLORED INSULATION FOR PHASE IDENTIFICATION. "PHASE TAPING" IS NOT ACCEPTABLE.
20. SWITCHES: FURNISH AND INSTALL ALL FUSIBLE AND NON-FUSIBLE SWITCHES AS REQUIRED BY CODES, WHETHER OR NOT SHOWN AND/OR NOTED. SWITCHES SHALL BE:
    A. HEAVY DUTY WITH NEMA-1 OR 3R ENCLOSURE, AS REQUIRED, AND BE PROVIDED WITH PAD-LOCKING FEATURE.
    B. PROVIDED AT EACH MOTOR THAT IS OUT OF SIGHT OF THE SWITCH OR PANEL FROM WHICH FED; AND BE NON-FUSIBLE DISCONNECT FOR SUCH USE.
    C. SWITCH MANUFACTURER SHALL BE GE, WESTINGHOUSE, OR SQUARE D.
    D. DISCONNECT SWITCHES INSTALLED OUTSIDE THE BUILDING SHALL BE IN NEMA-3 ENCLOSURES.
    E. FUSIBLE SWITCH-STARTER UNITS: EACH UNIT SHALL BE TOTALLY ENCLOSED AND EFFECTIVELY BARRIERED, MANUALLY OPERATED QUICK-MAKE, QUICK BREAK, HORSEPOWER RATED STARTER. PROVIDE CLASS R TYPE REJECTION FUSE CLIPS.
    F. IDENTIFY EACH DEVICE WITH NAMEPLATE SHOWING THE LOAD SERVED, MATCHING THE EXISTING NAMEPLATES.
21. WIRING DEVICES: FURNISH AND INSTALL ALL WIRING DEVICES AS INDICATED ON THE DRAWINGS. DEVICES SHALL IN ALL CASES BE SUITABLE FOR THE USE INTENDED AND SHALL HAVE VOLTAGE AND CURRENT RATINGS ADEQUATE FOR THE LOADS TO BE SERVED.
    A. MOUNTING: HEIGHTS OF ALL DEVICES ARE FROM FINISH FLOOR TO CENTERLINE OF DEVICE. DEVICES SHOWN ON THE DRAWINGS IN GROUPS OF TWO OR MORE SHALL BE LOCATED HORIZONTALLY IN SUCH A MANNER AS TO BE CLOSE AS POSSIBLE FROM THE CENTERLINE OF THE FIRST DEVICE TO THE CENTERLINE OF THE NEXT DEVICE UNLESS OTHERWISE NOTES.
    B. WALL SWITCHES: SHALL BE LEVITON DECORA TYPE, WHITE IN COLOR. USE CORRESPONDING DOUBLE POLE, THREE-WAY, FOUR-WAY, KEYED AND DIMMER SWITCHES WHERE NOTES. MOUNT AT 3'-10" A.F.F. AND WITHIN 6" OF ADJACENT DOOR JAMB, UNLESS OTHERWISE NOTED. USE "KEYED" SWITCHES IN LOCATIONS INDICATED.
    C. CONVENIENCE OUTLETS: SHALL BE GROUNDING TYPE, 20 AMP, 125 VOLT, LEVITON, WHITE COLOR. WEATHERPROOF DUPLEX OUTLETS SHALL BE LEVITON 5342 WITH SIERRA NO. WPD-8 PLATE. MOUNT AT 18" A.F.F., UNLESS OTHERWISE NOTED. PROVIDE NEMA 5-20R DEVICES UNLESS OTHERWISE INDICATED. PROVIDE SPECIFICATION (SPEC) GRADE HEAVY DUTY STRAIGHT BLADE DEVICES UNLESS OTHERWISE NOTED. PROVIDE HOSPITAL GRADE DEVICES WHERE INDICATED, OR AS REQUIRED BY CODES.
    D. ACCEPTABLE ALTERNATE MANUFACTURERS: SHALL BE LSI, H.E. WILLIAMS, HUBBELL, P&S AND BRYANT, PROVIDED THEIR DEVICES ARE OF THE SAME TYPE AND QUALITY AND THAT ONLY ONE MANUFACTURER SHALL BE USED THROUGHOUT THE WORK.
    E. PLATES: SHALL BE MATCHING TYPE FOR FINISHED AREAS AND GALVANIZED STEEL FOR AREAS WITH EXPOSED CONDUIT. PROVIDE STAINLESS STEEL PLATES FOR FLUSH MOUNTED DEVICES. PROVIDE CAST ALUMINUM WET LOCATION TYPE COVER PLATES WITH HINGED COVERS FOR DEVICES LOCATED OUTSIDE. GANG OUTLETS GROUPED TOGETHER UNDER A SINGLE WALL PLATE.
    F. INCANDESCENT DIMMERS: 120V SLIDE TO OFF, DECORA STYLE SIMILAR TO SWITCHES, WITH WATTAGE AS REQUIRED PER MANUFACTURER'S RECOMMENDATIONS. POWER FAILURE MEMORY. RFI SUPPRESSION. WHERE SWITCHES ARE SHOWN NEXT TO DIMMERS, PROVIDE MULTI-GANG COVER PLATES. PROVIDE DIMMERS WITH IVORY FINISH, SAME AS SWITCHES UNLESS OTHERWISE DIRECTED.
    G. INSTALL WIRING DEVICES AND ACCESSORIES PLUMB AND LEVEL, IN ACCORDANCE WITH MANUFACTURER'S WRITTEN INSTRUCTIONS, APPLICABLE REQUIREMENTS OF NEC AND IN ACCORDANCE WITH RECOGNIZED INDUSTRY PRACTICES TO FULFILL PROJECT REQUIREMENTS.
    H. TIGHTEN CONNECTORS AND TERMINALS, INCLUDING SCREWS AND BOLTS, IN ACCORDANCE WITH EQUIPMENT MANUFACTURER'S PUBLISHED TORQUE VALUES FOR WIRING DEVICES.
    I. COORDINATE WITH OTHER WORK, INCLUDING PAINTING, ELECTRICAL BOXES AND WIRING INSTALLATIONS, AS NECESSARY TO INTERFACE INSTALLATION OF WIRING DEVICES WITH OTHER WORK.
    J. INSTALL WIRING DEVICES AFTER WIRING WORK IS COMPLETED. INSTALL ONLY IN ELECTRICAL BOXES THAT ARE CLEAN; FREE FROM EXCESS BUILDING MATERIALS, DIRT, AND DEBRIS. INSTALL WALL PLATES AFTER PAINTING WORK IS COMPLETED.
    K. NO RECEPTACLE OR SWITCH OUTLETS SHALL BE MOUNTED BACK TO BACK. A MINIMUM OF ONE (1) STUD MUST BE BETWEEN OUTLETS.
    L. INSTALL RECEPTACLES WITH GROUND PIN UP. INSTALL SWITCHES WITH THE "ON" POSITION UP.
    M. ALL EXTERIOR DEVICES TO BE WEATHER PROOF AND EXTERIOR RECEPTACLES SHALL BE A GFCI TYPE DEVICE.
    N. ALL 120-VOLT RECEPTACLES OUTLETS LOCATED WITHIN SIX FEET OF SINKS SHALL HAVE GROUND FAULT CIRCUIT INTERRUPTION PROTECTION. GROUND FAULT OUTLETS SHALL BE CONNECTED ON DEDICATED NEUTRAL WIRE SERVING ONLY THE INDIVIDUAL OUTLET WITH THE GROUND FAULT PROTECTION.
    O. USE JUMBO SIZE WALL PLATES FOR OUTLETS INSTALLED IN MASONRY WALLS.
    P. DO NOT SHARE NEUTRAL CONDUCTORS ON DIMMERS.
22. PANELBOARD: PANELBOARDS SHALL BE GE TYPE AL, AQ, OR AE OR APPROVED EQUAL. REFER TO CONSTRUCTION DOCUMENTS FOR THE TYPE AND NUMBER OF BRANCH CIRCUIT BREAKERS. ALL PANELBOARD BUSSING SHALL BE COPPER. PANELBOARDS SHALL BE IN OUTDOOR ENCLOSURE WHERE INSTALLED OUTDOOR. MINIMUM INTERRUPTING RATING FOR PANELS SHALL BE AS INDICATED ON DRAWINGS. SERVICE ENTRANCE PANEL MUST HAVE FACTORY-MANUFACTURED AND FACTORY-INSTALLED BARRIERS TO PROTECT AGAINST ACCIDENTAL CONTACT WITH LIVE PARTS PER UL67.
23. TRANSFORMERS: DRY TYPE, TWO_WINDING OF THE SIZE AND ELECTRICAL CHARACTERISTICS SHOWN AND SCHEDULED ON DRAWINGS. TRANSFORMERS SHALL BE EQUIPPED WITH 2 2-1/2% TAPS ABOVE AND BELOW RATING. TRANSFORMERS SHALL HAVE A BONDING JUMPER INSTALLED BETWEEN THE SECONDARY NEUTRAL TERMINAL AND METAL CASE, AND SHALL INCLUDE A GROUND TERMINAL OF PROPER SIZE TO RECEIVE GROUND CONDUCTOR. TRANSFORMERS SHALL BE RATED AT FULL LOAD IN A 40°C AMBIENT WITH 30°C ULTIMATE HOT SPOT TEMPERATURE RISE ALLOWANCE, WITH CLASS F INSULATION HAVING A UL 185°C RATING LIMITING SYSTEM TEMPERATURE TO 115°C ON UNITS SMALLER THAN 15 kVA AND CLASS H INSULATION HAVING UL 220°C RATING LIMIT SYSTEM TEMPERATURE TO 150°C ON 15 kVA AND LARGER UNITS. PROVIDE COPPER WINDINGS.
24. FUSES: FUSES IN MAIN, FEEDER, AND BRANCH CIRCUIT SWITCHES, RATED 600 AMPS AND BELOW, FEEDING MOTORS, TRANSFORMERS, AND GENERAL PURPOSE CIRCUITS (UNLESS OTHERWISE SPECIFIED), SHALL BE UL LISTED AND LABELED AS CURRENT LIMITING, TIME-DELAY, 200,000 A.I.C., CLASS RK-5 FUSES SHALL BE BUSSMAN TYPE FRN-R (250V), AND FRS-R (600V).
25. GROUNDING: ALL CONDUIT WORK, MOTOR, STARTERS, AND OTHER ELECTRICAL EQUIPMENT WIRED AND CONNECTED BY THIS CONTRACTOR SHALL BE EFFECTIVELY AND PERMANENTLY GROUNDED IN FULL ACCORDANCE WITH NEC 250.
26. OTHER MATERIALS: FURNISH AND INSTALL ALL OTHER MATERIALS SUCH AS HARDWARE, TAPE, CLAMPS, CONNECTORS, FITTINGS, SUPPORTS, AND ALL OTHER APPURTENANCES REQUIRED TO COMPLETE THE WORK TO THE FULL INTENT OF THE CONTRACT. TERMINAL LUGS SHALL BE FURNISHED BY THE ELECTRICAL CONTRACTOR.
27. ELECTRICAL CONTRACTOR IS RESPONSIBLE FOR ALL TEMPERATURE, CO2, AND HUMIDITY SENSOR STUB-UPS FOR THE MECHANICAL HVAC SYSTEM. REFER TO MECHANICAL PRINTS FOR SENSOR QUANTITY AND LOCATIONS.
28. ELECTRICAL CONTRACTOR WILL CONNECT ALL LOW VOLTAGE PLUMBING CONTRACTOR SUPPLIED TRANSFORMERS (FOR AUTOMATIC FLUSH) TO THE NEAREST 120V CIRCUIT (OR IF INDICATED ON PLANS WITH A CIRCUIT NUMBER). CONTRACTOR TO ASSUME ONE TRANSFORMER PER BATHROOM. THE PLUMBING CONTRACTOR WILL BE RESPONSIBLE FOR LOW VOLTAGE WIRING TO THE FIXTURES.
29. SWITCHGEAR AND DISTRIBUTION PANELS: SHALL BE FIELD MARKED TO WARN QUALIFIED PERSONS OF POTENTIAL ELECTRIC ARC FLASH HAZARDS. THE MARKING SHALL BE LOCATED SO AS TO BE CLEARLY VISIBLE TO QUALIFIED PERSONS BEFORE EXAMINATION, ADJUSTMENT, SERVICING, OR MAINTENANCE OF THE EQUIPMENT, NEC 110.16.
30. ELECTRICAL CONTRACTOR IS RESPONSIBLE FOR COORDINATING THE LOCATIONS OF ALL GTD'S (GENERATOR TRANSFER DEVICES), LIGHTING CONTROL EQUIPMENT, LOW VOLTAGE TRANSFORMERS AND OTHER ELECTRICAL ITEMS WHICH ARE ABOVE CEILINGS. THESE DEVICES SIMILAR TO ELECTRICAL JUNCTION BOXES ARE NOT ALLOWED BY NEC TO BE ABOVE HARD CEILINGS. THE ARCHITECT/OWNER WILL NOT ALLOW THE INSTALLATION OF ACCESS PANELS IN THE CEILINGS. BE AWARE THAT EQUIPMENT IN THOSE AREAS OF HARD CEILINGS WILL HAVE TO BE REMOTELY LOCATED TO THE NEAREST ACOUSTICAL LAY-IN CEILING AREAS.
31. ELECTRICAL MATERIAL AND EQUIPMENT: NO ELECTRICAL MATERIALS, APPARATUS, DEVICES, APPLIANCES, FIXTURES, OR EQUIPMENT SHALL BE SOLD OR INSTALLED IN THE CITY UNLESS THEY ARE IN CONFORMANCE WITH THE PROVISIONS OF THIS CODE, THE LAWS OF THE STATE OF TEXAS AND ANY APPLICABLE RULES AND REGULATIONS ISSUED UNDER THE AUTHORITY OF THE STATE STATUTES. THE MAKER'S NAME, TRADEMARK, OR OTHER IDENTIFICATION SYMBOL SHALL BE PLACED ON ALL ELECTRICAL MATERIALS, APPARATUS, DEVICES, APPLIANCES, FIXTURES, AND EQUIPMENT USED OR INSTALLED UNDER THE PROVISIONS OF THIS CODE. ALL ELECTRICAL MATERIALS AND EQUIPMENT SHALL BE LISTED AND LABELED FOR THE INTENDED USE AND SHALL BE INCLUDED IN A LIST PUBLISHED BY AN APPROVED AGENCY.
31. THE ELECTRICAL CONTRACTOR IS RESPONSIBLE FOR COORDINATING ALL CONDUIT ROUTING TO ANY MECHANICAL ROOF TOP EQUIPMENT AND ROUTE THE CONDUIT THRU THE EQUIPMENT CURB SO THERE IS NOT A SEPARATE ROOF PENETRATION.

Infrastructure Associates
INFRASTRUCTURE ASSOCIATES, INC.
6117 RICHMOND AVENUE, SUITE 200
HOUSTON, TEXAS 77057
TBPE REGISTRATION NO. F-4506
(713) 622-0120 PH (713) 622-0557 FAX
WWW.IAHOUSTON.COM

THESE DRAWINGS ARE INSTRUMENTS OF SERVICE AND ARE THE PROPERTY OF SIGMA ENGINEERS, INC.
ALL DESIGNS AND INFORMATION HEREIN ARE FOR USE ON THE SPECIFIED PROJECT AND SHALL NOT BE USED OTHERWISE WITHOUT THE WRITTEN CONSENT OF SIGMA ENGINEERS, INC.
REGISTRATION # F-003645
COPYRIGHT 2022 BY SIGMA ENGINEERS, INC.
ALL RIGHTS RESERVED

SIGMAENGINEERS
Innovative Solutions | Solid Designs
4099 Calder Avenue
Beaumont, Texas 77706
Phone (409) 898-1001
www.sigmaengineers.com

JEFFERSON COUNTY REGIONAL AIRPORT
MAIN TERMINAL HVAC REVAMP
5000 JERRY WARE DR.
BEAUMONT, TEXAS

08/19/2022
TAS #:

ISSUED FOR
ISSUE FOR PERMIT 08/19/2022

KT, AA
DRAWN BY
MF, SK
CHECKED BY
MF, SK
APPROVED BY

SHEET NUMBER
E0.00
SYMBOLS, NOTES, AND LEGEND

22-413
PROJECT NO.

ELECTRICAL LINE TYPE LEGEND

- INDICATES EXISTING WORK TO REMAIN (UON AS TO BE ALTER)
- INDICATES PROPOSED (NEW) WORK
- INDICATES PROPOSED (NEW) WORK

EXISTING PANELBOARD WITH DEMO LOADS

PANEL: HI — LOCATION: - — MTG: [X] SURFACE [ ] FLUSH — BUS: [X] NEUTRAL [X] SYS GND [ ] ISO GND — OPT: [ ] INT TVSS [ ] FEED THRU — ENC: NEMA-1 — MAT: CU — AMP MLO: - — AMP MCB: 400 — WIRE: 3 ø 4 — KAIC: 35 — VOLT: 480Y/277

WIRE SIZE	LOAD DESCRIPTION	LOAD KVA	BRKR SIZE	CKT NO	A B C	CKT NO	BRKR SIZE	LOAD KVA	LOAD DESCRIPTION	WIRE SIZE
(E)	VAV TERMINAL BOX 1-1 THRU 1-3	2.2	20/1	1		2	15	1	(N) HWP-1	3#12
(E)	VAV TERMINAL BOX 1-4 THRU 1-7	2.2	20/1	3		4			VIA 30AS/NF/SI/NEMA-1	1#12G
(E)	VAV TERMINAL BOX 1-8 THRU 1-10	2.2	20/1	5		6	3			3/4"C
(E)	AHU-5	8	25	7		8	15	9	(N) HWP-2	3#12
				9		10			VIA VFD	1#12G
			3	11		12	3			3/4"C
(E)	VAV TERMINAL BOX 3-2 THRU 3-4	2.2	20/1	13		14	15	9	(N) HWP-3	3#12
(E)	VAV TERMINAL BOX 3-2 THRU 3-4	2.2	20/1	15		16			VIA VFD	1#12G
(E)	VAV TERMINAL BOX 3-2 THRU 3-4	2.2	20/1	17		18	3			3/4"C
(E)	AHU-6	10	30	19		20	30	10	AHU-1	(E)
				21		22				
			3	23		24	3			
				25		26	35	12	AHU-7	(E)
				27		28				
				29		30	3			
(E)	AHU-3	10	30	31		32				
				33		34				
			3	35		36				
-	EXISTING	2.2	20/1	37		38	70	25	XFMR TL-1	(E)
-	EXISTING	2.2	20/1	39		40			30KVA	
-	EXISTING	2.2	20/1	41		42	3			

CONN LTG - x1.25= - KVA; XFER LOAD 25 x1.0= 25 KVA; CONN EQUIP 27 x1.0= 27 KVA; CONN RCPT - xNEC= - KVA; CONN HVAC 70 x1.0= 70 KVA; TOTAL LOAD 122 KVA 147 AMPS

ALL WIRING FOR 20A/1P CKT. SHALL CONSIST OF 2#12, 1#12G IN 3/4"C UNLESS OTHERWISE NOTED.

*REGARDLESS OF DEMO'ED CIRCUITING SHOWN ABOVE REAL WORLD CONDITIONS MAY VARY FROM AS BUILT DOCUMENTATION. THE CONTRACTOR SHALL FIELD VERIFY AND NOT DISCONNECT ALL EXISTING LOADS THAT ARE TO REMAIN IN OPERATION. INCLUDING BUT NOT LIMITED TO RECEPTACLE, LIGHTING, HVAC, AND EQUIPMENT CIRCUITS. IF THERE IS A CONFLICT NEW LOADS SHALL BE CONNECTED TO NEXT AVAILIBLE SPARE IN THE PANEL. RE-TYPE PANEL SCHEDULE.

NEW BREAKER TO REPLACE EXISTING IN SAME LOCATION

EXISTING PANELBOARD

PANEL: EHI — LOCATION: - — MTG: [X] SURFACE [ ] FLUSH — BUS: [X] NEUTRAL [X] SYS GND [ ] ISO GND — OPT: [ ] INT TVSS [ ] FEED THRU — ENC: NEMA-1 — MAT: CU — AMP MLO: - — AMP MCB: 400 — WIRE: 3 ø 4 — KAIC: - — VOLT: 480Y/277

WIRE SIZE	LOAD DESCRIPTION	LOAD KVA	BRKR SIZE	CKT NO	A B C	CKT NO	BRKR SIZE	LOAD KVA	LOAD DESCRIPTION	WIRE SIZE
(E)	(E) XFMR TEL-1	32	50	1		2	30	12	(N) CHWP-2	3#10
				3		4			VIA VFD	1#10G
			3	5		6	3			3/4"C
(E)	(E) AHU-2	10	30	7		8	25	8	(E) AHU-4	-
				9		10				-
			3	11		12	3			-
-	(E) VAV BOX	2.2	20/1	13		14	20/1	2.2	(E) EXISTING	-
-	(E) VAV BOX	2.2	20/1	15		16	20/1	2.2	(E) EXISTING	-
-	(E) VAV BOX	2.2	20/1	17		18	20/1	2.2	(E) EXISTING	-
-	(E) VAV BOX	2.2	20/1	19		20	20/1	2.2	(E) EXISTING	-
-	SPARE	-	20/1	21		22	20/1	2.2	(E) EXISTING	-
-	SPARE	-	20/1	23		24	20/1	2.2	(E) EXISTING	-
-	SPARE	-	20/1	25		26	20/1	2.2	(E) EXISTING	-
-	-	-	-	27		28	20/1	2.2	(E) EXISTING	-
-	-	-	-	29		30	20/1	2.2	(E) EXISTING	-
-	-	-	-	31		32	-	-	-	-
-	-	-	-	33		34	-	-	-	-
-	-	-	-	35		36	-	-	-	-
-	(E) CH-2	75	225	37		38	-	-	-	-
-				39		40	-	-	-	-
-			3	41		42	-	-	-	-

CONN LTG - x1.25= - KVA; XFER LOAD 32 x1.0= 32 KVA; CONN EQUIP 12 x1.0= 12 KVA; CONN RCPT - xNEC= - KVA; CONN HVAC 122 x1.0= 122 KVA; TOTAL LOAD 166 KVA 200 AMPS

ALL WIRING FOR 20A/1P CKT. SHALL CONSIST OF 2#12, 1#12G IN 3/4"C UNLESS OTHERWISE NOTED.

*REGARDLESS OF DEMO'ED CIRCUITING SHOWN ABOVE REAL WORLD CONDITIONS MAY VARY FROM AS BUILT DOCUMENTATION. THE CONTRACTOR SHALL FIELD VERIFY AND NOT DISCONNECT ALL EXISTING LOADS THAT ARE TO REMAIN IN OPERATION. INCLUDING BUT NOT LIMITED TO RECEPTACLE, LIGHTING, HVAC, AND EQUIPMENT CIRCUITS. IF THERE IS A CONFLICT NEW LOADS SHALL BE CONNECTED TO NEXT AVAILIBLE SPARE IN THE PANEL. RE-TYPE PANEL SCHEDULE.

NEW BREAKER TO REPLACE EXISTING IN SAME LOCATION

EXISTING PANELBOARD

PANEL: LI — LOCATION: - — MTG: [X] SURFACE [ ] FLUSH — BUS: [X] NEUTRAL [X] SYS GND [ ] ISO GND — OPT: [ ] INT TVSS [ ] FEED THRU — ENC: NEMA-1 — MAT: CU — AMP MLO: - — AMP MCB: 150 — WIRE: 3 ø 4 — KAIC: 22 — VOLT: 208Y/120

WIRE SIZE	LOAD DESCRIPTION	LOAD KVA	BRKR SIZE	CKT NO	A B C	CKT NO	BRKR SIZE	LOAD KVA	LOAD DESCRIPTION	WIRE SIZE
-	EXISTING	1.0	20/1	1		2	20/1	1.0	EXISTING	-
-	EXISTING	1.0	20/1	3		4	20/1	1.0	EXISTING	-
-	EXISTING	1.0	20/1	5		6	20/1	1.0	EXISTING	-
-	EXISTING	1.0	20/1	7		8	20/1	1.0	EXISTING	-
-	EXISTING	1.0	20/1	9		10	20/1	1.0	EXISTING	-
-	EXISTING	1.0	20/1	11		12	20/1	1.0	EXISTING	-
-	EXISTING	1.0	20/1	13		14	20/1	1.0	EXISTING	-
-	EXISTING	1.0	20/1	15		16	20/1	1.0	EXISTING	-
-	EXISTING	1.0	20/1	17		18	20/1	1.0	EXISTING	-
-	EXISTING	1.0	20/1	19		20	20/1	1.0	(N) BOILER	#12
-	EXISTING	1.0	20/1	21		22	20/1	1.0	EXISTING	-
-	EXISTING	1.0	20/1	23		24	20/1	1.0	EXISTING	-
-	EXISTING	1.0	20/1	25		26	20/1	1.0	EXISTING	-
-	EXISTING	1.0	20/1	27		28	20/1	1.0	EXISTING	-
-	EXISTING	1.0	20/1	29		30	20/1	1.0	EXISTING	-
-	EXISTING	1.0	20/1	31		32	20/1	1.0	EXISTING	-
-	EXISTING	1.0	20/1	33		34	20/1	1.0	EXISTING	-
-	EXISTING	1.0	20/1	35		36	20/1	1.0	EXISTING	-
-	EXISTING	1.0	20/1	37		38	20/1	1.0	EXISTING	-
-	EXISTING	1.0	20/1	39		40	20/1	1.0	EXISTING	-
-	SPACE	-	-	41		42	-	-	SPACE	-

CONN LTG - x1.25= - KVA; XFER LOAD - x1.0= - KVA; CONN EQUIP - x1.0= - KVA; CONN RCPT 40 xNEC= 25 KVA; CONN HVAC - x1.0= - KVA; TOTAL LOAD 25 KVA 70 AMPS

ALL WIRING FOR 20A/1P CKT. SHALL CONSIST OF 2#12, 1#12G IN 3/4"C UNLESS OTHERWISE NOTED.

*REGARDLESS OF DEMO'ED CIRCUITING SHOWN ABOVE REAL WORLD CONDITIONS MAY VARY FROM AS BUILT DOCUMENTATION. THE CONTRACTOR SHALL FIELD VERIFY AND NOT DISCONNECT ALL EXISTING LOADS THAT ARE TO REMAIN IN OPERATION. INCLUDING BUT NOT LIMITED TO RECEPTACLE, LIGHTING, HVAC, AND EQUIPMENT CIRCUITS. IF THERE IS A CONFLICT NEW LOADS SHALL BE CONNECTED TO NEXT AVAILIBLE SPARE IN THE PANEL. RE-TYPE PANEL SCHEDULE.

NEW BREAKER TO REPLACE EXISTING IN SAME LOCATION

EXISTING PANELBOARD

PANEL: ELI — LOCATION: - — MTG: [X] SURFACE [ ] FLUSH — BUS: [X] NEUTRAL [X] SYS GND [ ] ISO GND — OPT: [ ] INT TVSS [ ] FEED THRU — ENC: NEMA-1 — MAT: CU — AMP MLO: - — AMP MCB: 100 — WIRE: 3 ø 4 — KAIC: 22 — VOLT: 208Y/120

WIRE SIZE	LOAD DESCRIPTION	LOAD KVA	BRKR SIZE	CKT NO	A B C	CKT NO	BRKR SIZE	LOAD KVA	LOAD DESCRIPTION	WIRE SIZE
-	DATA COMM RECT RM 129	1.0	20/1	1		2	20/1	1.0	FIRE ALARM PANEL	-
-	DATA COMM RECT RM 129	1.0	20/1	3		4	30/1	1.0	TSA COMM CABINET	-
-	DATA COMM RECT RM 129	1.0	20/1	5		6	20/1	1.0	PA SYSTEM	-
-	E-TICKET KIOSKS	1.0	20/1	7		8	20/1	1.0	AIRLINE #1 COMM CABINET	-
-	AIRLINE #1 CHECK IN COUNTER	1.0	20/1	9		10	20/1	1.0	GFCI BESIDE BAGGAGE	-
-	AIRLINE #2 CHECK IN COUNTER	1.0	20/1	11		12	20/1	1.0	LIGHTING RELAY PANEL	-
-	TV'S	1.0	20/1	13		14	20/1	1.0	HERTGZ RENTAL COMM CABINET	-
-	AIT/ POWER POLE	1.0	20/1	15		16	20/1	1.0	AIR OFFICE SUM PUMP	-
-	AUX PLUGS / POWER POLE	1.0	20/1	17		18	20/1	1.0	DATA COMM RM 129	-
-	MECHANICAL BAS PANEL	1.0	20/1	19		20	60	5	GENERAL PANEL	-
#12	(N) CHILLER #1 HEATER	1.0	20/1	21		22	2		GENERAL PANEL	-
#12	(N) CHILLER #2 HEATER	1.0	20/1	23		24	50	7	DE ICER RECEPTACLE	-
-	HEAT TRACE	1.0	20/1	25		26			DE ICER RECEPTACLE	-
-	SPRINKLER PUMP	1.0	20/1	27		28	3		DE ICER RECEPTACLE	-
-	-	-	-	29		30	20/1	1.0	A.T.T DATA ROOM	-
-	-	-	-	31		32	30/1	1.4	EXISTING	-
-	-	-	-	33		34	-	-	-	-
-	-	-	-	35		36	-	-	-	-
-	MAIN	-	100	37		38	-	-	-	-
-	-			39		40	40	3	EWA-1	-
-	-		3	41		42	2			-

CONN LTG - x1.25= - KVA; XFER LOAD 5 x1.0= 5 KVA; CONN EQUIP 11.4 x1.0= 11 KVA; CONN RCPT 23 xNEC= 16 KVA; CONN HVAC - x1.0= - KVA; TOTAL LOAD 32 KVA 91 AMPS

ALL WIRING FOR 20A/1P CKT. SHALL CONSIST OF 2#12, 1#12G IN 3/4"C UNLESS OTHERWISE NOTED.

*REGARDLESS OF DEMO'ED CIRCUITING SHOWN ABOVE REAL WORLD CONDITIONS MAY VARY FROM AS BUILT DOCUMENTATION. THE CONTRACTOR SHALL FIELD VERIFY AND NOT DISCONNECT ALL EXISTING LOADS THAT ARE TO REMAIN IN OPERATION. INCLUDING BUT NOT LIMITED TO RECEPTACLE, LIGHTING, HVAC, AND EQUIPMENT CIRCUITS. IF THERE IS A CONFLICT NEW LOADS SHALL BE CONNECTED TO NEXT AVAILIBLE SPARE IN THE PANEL. RE-TYPE PANEL SCHEDULE.

NEW BREAKER TO REPLACE EXISTING IN SAME LOCATION

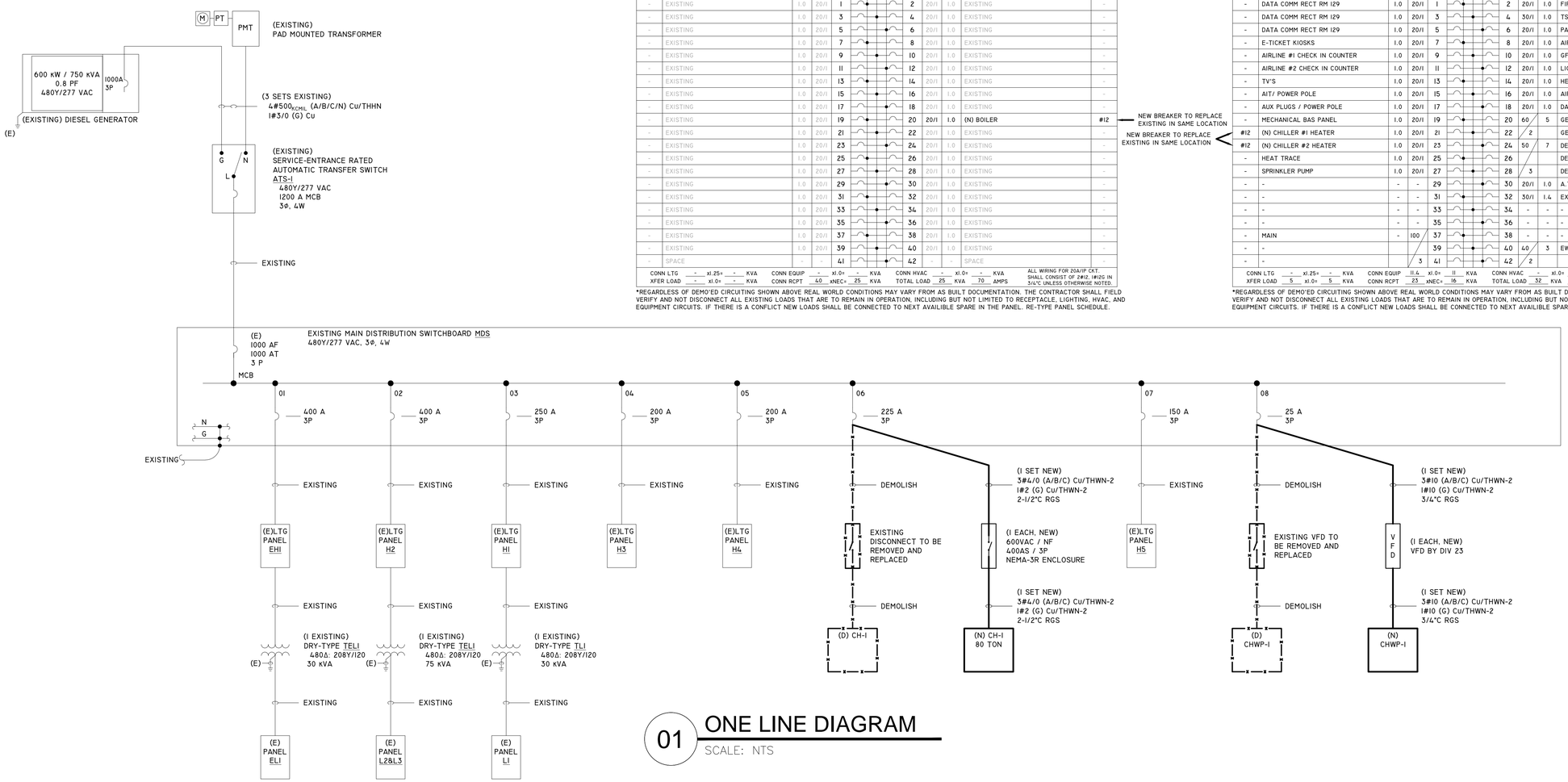

01 ONE LINE DIAGRAM

SCALE: NTS

Infrastructure Associates
INFRASTRUCTURE ASSOCIATES, INC.
6117 RICHMOND AVENUE, SUITE 200
HOUSTON, TEXAS 77057
TBPE REGISTRATION NO. F-4506
(713) 622-0120 PH (713) 622-0557 FAX
WWW.IAHOUSTON.COM

THESE DRAWINGS ARE INSTRUMENTS OF SERVICE AND ARE THE PROPERTY OF SIGMA ENGINEERS, INC. ALL DESIGNS AND INFORMATION HEREIN ARE FOR USE ON THE SPECIFIED PROJECT AND SHALL NOT BE USED OTHERWISE WITHOUT THE WRITTEN CONSENT OF SIGMA ENGINEERS, INC.
REGISTRATION # F-003645
COPYRIGHT 2022 BY SIGMA ENGINEERS, INC. ALL RIGHTS RESERVED.

SIGMAENGINEERS
Innovative Solutions | Solid Designs
4099 Calder Avenue
Beaumont, Texas 77706
Phone (409) 898-1001
www.sigmaengineers.com

JEFFERSON COUNTY REGIONAL AIRPORT
MAIN TERMINAL HVAC REVAMP
5000 JERRY WARE DR.
BEAUMONT, TEXAS

STATE OF TEXAS — SEVAK KALANTARIANS — 97498 — LICENSED PROFESSIONAL ENGINEER
08/19/2022
PAS...#

ISSUED FOR
ISSUE FOR PERMIT 08/19/2022

KT, AA — DRAWN BY
MF, SK — CHECKED BY
MF, SK — APPROVED BY

SHEET NUMBER
E0.11
ONE LINE & SCHEDULES

22-413
PROJECT NO.

ELECTRICAL DEMOLITION NOTES

1. ELECTRICAL CONTRACTOR SHALL REMOVE ELECTRICAL EQUIPMENT AS INDICATED BY KEY NOTES AND AS REQUIRED BY SCOPE OF DEMOLITION WORK. REFER TO ARCHITECTURAL DRAWINGS FOR ALL WALLS DESIGNATED FOR REMOVAL.
2. BEFORE ANY ELECTRICAL EQUIPMENT OR OUTLET REMOVAL, IDENTIFY AND DISCONNECT THE POWER SUPPLY TO IT. VERIFY WITH OWNER L OADS THAT MUST REMAIN IN SERVICE AND DO NOT DISCONNECT THESE.
3. REMOVE ALL RELATED LINE SIDE AND LOAD SIDE FEEDERS (WIRES AND CONDUITS) IN ENTIRETY FOR EQUIPMENT INDICATED OR REQUIRED TO BE REMOVED.
4. LEAVE OVERCURRENT PROTECTION DEVICE FOR EQUIPMENT INDICATED TO BE REMOVED IN PLACE UNLESS NOTED OTHERWISE.
5. ALL REMOVED EQUIPMENT IS PROPERTY OF OWNER AND SHALL BE STORED AT OWNER DESIGNATED LOCATION FOR INSPECTION. CONTRACTOR IS RESPONSIBLE FOR REMOVAL AND DISPOSAL OF EQUIPMENT OWNER DOES NOT INTEND TO KEEP, STORE, OR REUSE.
6. WHERE EXISTING OUTLETS AND DEVICES (RECEPTACLES OR LUMINAIRES) TO REMAIN IN SERVICE SHARE SAME BRANCH CIRCUIT AS OUTLETS (RECEPTACLES OR LUMINAIRES) TO BE REMOVED. ELECTRICAL CONTRACTOR SHALL ENSURE CONTINUITY OF THE EXISTING AFTER REMOVAL. THIS CONDITION MAY NOT HAVE BEEN IDENTIFIED ON ELECTRICAL DEMOLITION DRAWINGS. ELECTRICAL CONTRACTOR SHALL FIELD VERIFY SUCH CONDITION.
7. REMOVE ALL ABANDONED FEEDERS (CONDUITS AND WIRING) IN AREA OF CONSTRUCTION. PROPERLY SUPPORT ALL REMAINING EXISTING CONDUIT AND BOXES AFFECTED. PAINT REUSED AND EXPOSED CONDUIT AND BOXES TO MATCH WALL.
8. WHERE PANELBOARDS ARE INDICATED TO BE REPLACED AND FEEDER AND BRANCH CIRCUITS ARE TO REMAIN IN SERVICE, CONTRACTOR SHALL PROTECT THEM FOR REUSE DURING CONSTRUCTION PHASE OF THE WORK.
9. ELECTRICAL CONTRACTOR SHALL INSPECT EXISTING ELECTRICAL CIRCUITS INDICATED TO REMAIN IN SERVICE AND REUSED. CONTRACTOR SHALL PERFORM CONDUCTOR INSULATION TESTING IN ALL MAIN FEEDERS INTENDED TO BE REUSED IN ACCORDANCE WITH SPECIFICATION REQUIREMENTS. ALL CONDUCTORS FAILING TEST SHALL BE REPLACED WITH SAME SIZE AS EXISTING.
10. ELECTRICAL CONTRACTOR SHALL INSPECT ALL EXISTING JUNCTION BOXES AND REPLACE MISSING COVERS AND PLUG ALL UNUSED HOLES.
11. ELECTRICAL PLANS DO NOT SHOW ALL RISER CONDUITS WITHIN WALLS. WHEN FOUND, CONTRACTOR SHALL DETERMINE IF THEY ARE IN SERVICE. IF SO, CONTRACTOR SHALL RELOCATE THEM TO A NEW NEARBY WALL OR OTHER STRUCTURE. SPLICES IN THE WIRING WILL BE PERMITTED IN SUITABLE JUNCTION BOXES IF THE CONDUCTORS ARE IN SOUND CONDITION.

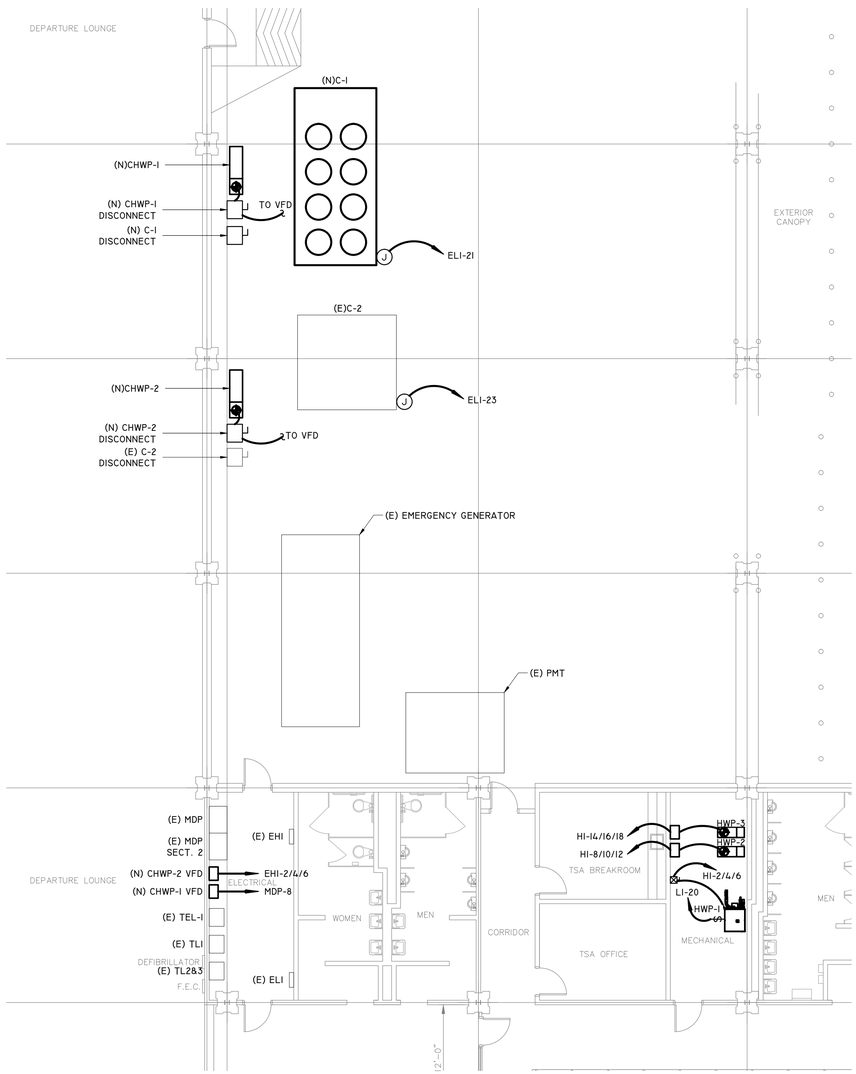

02 ENLARGED PROPOSED PLAN - ELECTRICAL
SCALE: 1/8"=1'-0"

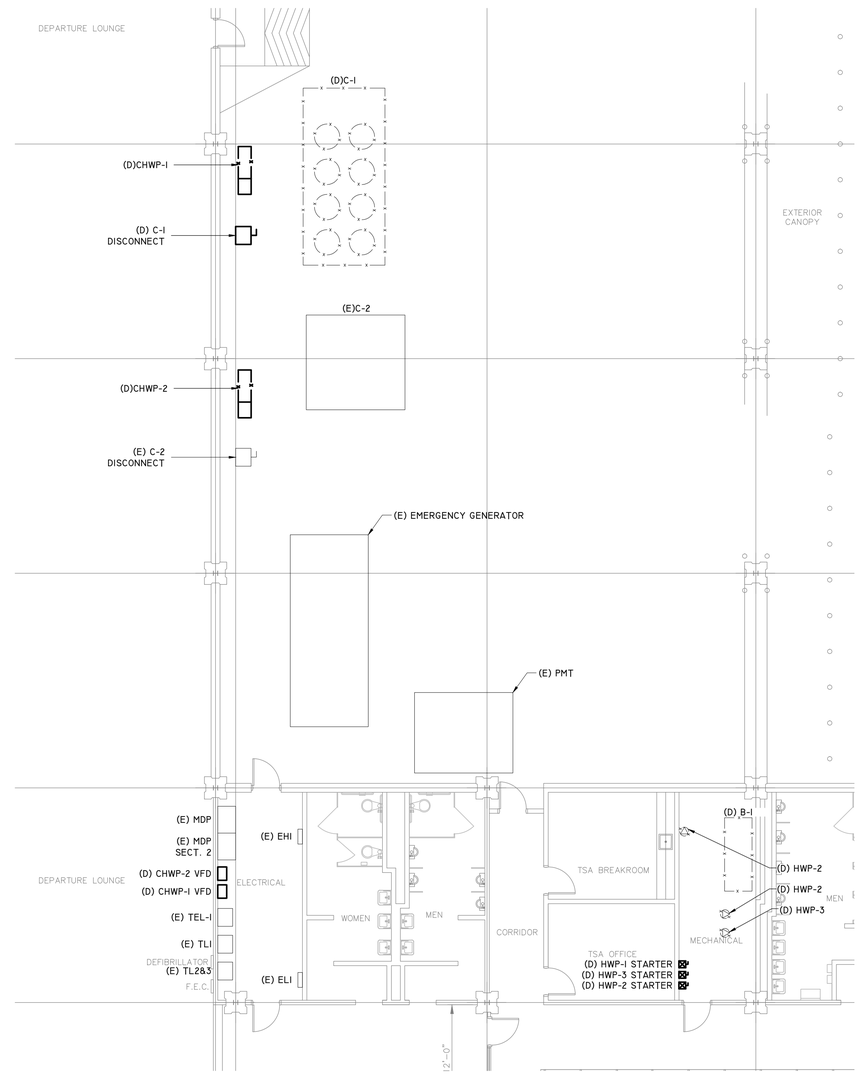

01 ENLARGED DEMOLITION PLAN - ELECTRICAL
SCALE: 1/8"=1'-0"

Infrastructure Associates
INFRASTRUCTURE ASSOCIATES, INC.
6117 RICHMOND AVENUE, SUITE 200
HOUSTON, TEXAS 77057
TBPE REGISTRATION NO. F-4506
(713) 622-0120 PH (713) 622-0557 FAX
WWW.IAHOUSTON.COM

THESE DRAWINGS ARE INSTRUMENTS OF SERVICE AND ARE THE PROPERTY OF SIGMA ENGINEERS, INC. ALL DESIGNS AND INFORMATION HEREIN ARE FOR USE ON THE SPECIFIED PROJECT AND SHALL NOT BE USED OTHERWISE WITHOUT THE WRITTEN CONSENT OF SIGMA ENGINEERS, INC.
REGISTRATION # F-003645
COPYRIGHT 2022 BY SIGMA ENGINEERS, INC. ALL RIGHTS RESERVED

SIGMAENGINEERS
Innovative Solutions | Solid Designs
4099 Calder Avenue
Beaumont, Texas 77706
Phone (409) 898-1001
www.sigmaengineers.com

JEFFERSON COUNTY REGIONAL AIRPORT
MAIN TERMINAL HVAC REVAMP
5000 JERRY WARE DR.
BEAUMONT, TEXAS

STATE OF TEXAS
SEVAK KALANTARIANS
97498
LICENSED
PROFESSIONAL ENGINEER
08/19/2022
MO. #

ISSUED FOR
ISSUE FOR PERMIT 08/19/2022

KT, AA
DRAWN BY
MF, SK
CHECKED BY
MF, SK
APPROVED BY

SHEET NUMBER
E2.01
ENLARGED FLOOR PLAN – POWER

22-413
PROJECT NO.